NI cDAQ™-9171/9174/9178

User Manual

NI CompactDAQ USB 2.0 Chassis

July 2016
372838E-01

NATIONAL INSTRUMENTS™

Worldwide Technical Support and Product Information

ni.com

Worldwide Offices

Visit ni.com/niglobal to access the branch office websites, which provide up-to-date contact information, support phone numbers, email addresses, and current events.

National Instruments Corporate Headquarters

11500 North Mopac Expressway Austin, Texas 78759-3504 USA Tel: 512 683 0100

For further support information, refer to the *NI Services* appendix. To comment on NI documentation, refer to the NI website at ni.com/info and enter the Info Code feedback.

© 2009–2016 National Instruments. All rights reserved.

Legal Information

Limited Warranty

This document is provided ‘as is’ and is subject to being changed, without notice, in future editions. For the latest version, refer to `ni.com/manuals`. NI reviews this document carefully for technical accuracy; however, NI MAKES NO EXPRESS OR IMPLIED WARRANTIES AS TO THE ACCURACY OF THE INFORMATION CONTAINED HEREIN AND SHALL NOT BE LIABLE FOR ANY ERRORS.

NI warrants that its hardware products will be free of defects in materials and workmanship that cause the product to fail to substantially conform to the applicable NI published specifications for one (1) year from the date of invoice.

For a period of ninety (90) days from the date of invoice, NI warrants that (i) its software products will perform substantially in accordance with the applicable documentation provided with the software and (ii) the software media will be free from defects in materials and workmanship.

If NI receives notice of a defect or non-conformance during the applicable warranty period, NI will, in its discretion: (i) repair or replace the affected product, or (ii) refund the fees paid for the affected product. Repaired or replaced Hardware will be warranted for the remainder of the original warranty period or ninety (90) days, whichever is longer. If NI elects to repair or replace the product, NI may use new or refurbished parts or products that are equivalent to new in performance and reliability and are at least functionally equivalent to the original part or product.

You must obtain an RMA number from NI before returning any product to NI. NI reserves the right to charge a fee for examining and testing Hardware not covered by the Limited Warranty.

This Limited Warranty does not apply if the defect of the product resulted from improper or inadequate maintenance, installation, repair, or calibration (performed by a party other than NI); unauthorized modification; improper environment; use of an improper hardware or software key; improper use or operation outside of the specification for the product; improper voltages; accident, abuse, or neglect; or a hazard such as lightning, flood, or other act of nature.

THE REMEDIES SET FORTH ABOVE ARE EXCLUSIVE AND THE CUSTOMER’S SOLE REMEDIES, AND SHALL APPLY EVEN IF SUCH REMEDIES FAIL OF THEIR ESSENTIAL PURPOSE.

EXCEPT AS EXPRESSLY SET FORTH HEREIN, PRODUCTS ARE PROVIDED "AS IS" WITHOUT WARRANTY OF ANY KIND AND NI DISCLAIMS ALL WARRANTIES, EXPRESSED OR IMPLIED, WITH RESPECT TO THE PRODUCTS, INCLUDING ANY IMPLIED WARRANTIES OF MERCHANTABILITY, FITNESS FOR A PARTICULAR PURPOSE, TITLE OR NON-INFRINGEMENT, AND ANY WARRANTIES THAT MAY ARISE FROM USAGE OF TRADE OR COURSE OF DEALING. NI DOES NOT WARRANT, GUARANTEE, OR MAKE ANY REPRESENTATIONS REGARDING THE USE OF OR THE RESULTS OF THE USE OF THE PRODUCTS IN TERMS OF CORRECTNESS, ACCURACY, RELIABILITY, OR OTHERWISE. NI DOES NOT WARRANT THAT THE OPERATION OF THE PRODUCTS WILL BE UNINTERRUPTED OR ERROR FREE.

In the event that you and NI have a separate signed written agreement with warranty terms covering the products, then the warranty terms in the separate agreement shall control.

Copyright

Under the copyright laws, this publication may not be reproduced or transmitted in any form, electronic or mechanical, including photocopying, recording, storing in an information retrieval system, or translating, in whole or in part, without the prior written consent of National Instruments Corporation.

National Instruments respects the intellectual property of others, and we ask our users to do the same. NI software is protected by copyright and other intellectual property laws. Where NI software may be used to reproduce software or other materials belonging to others, you may use NI software only to reproduce materials that you may reproduce in accordance with the terms of any applicable license or other legal restriction.

End-User License Agreements and Third-Party Legal Notices

You can find end-user license agreements (EULAs) and third-party legal notices in the following locations:

- Notices are located in the `<National Instruments>\_Legal Information` and `<National Instruments>` directories.
- EULAs are located in the `<National Instruments>\Shared\MDF\Legal\license` directory.
- Review `<National Instruments>\_Legal Information.txt` for information on including legal information in installers built with NI products.

U.S. Government Restricted Rights

If you are an agency, department, or other entity of the United States Government (“Government”), the use, duplication, reproduction, release, modification, disclosure or transfer of the technical data included in this manual is governed by the Restricted Rights provisions under Federal Acquisition Regulation 52.227-14 for civilian agencies and Defense Federal Acquisition Regulation Supplement Section 252.227-7014 and 252.227-7015 for military agencies.

Trademarks

Refer to the *NI Trademarks and Logo Guidelines* at `ni.com/trademarks` for more information on NI trademarks.

ARM, Keil, and µVision are trademarks or registered of ARM Ltd or its subsidiaries.

LEGO, the LEGO logo, WEDO, and MINDSTORMS are trademarks of the LEGO Group.

TETRIX by Pitsco is a trademark of Pitsco, Inc.

FIELDBUS FOUNDATION™ and FOUNDATION™ are trademarks of the Fieldbus Foundation.

EtherCAT® is a registered trademark of and licensed by Beckhoff Automation GmbH.

CANopen® is a registered Community Trademark of CAN in Automation e.V.

DeviceNet™ and EtherNet/IP™ are trademarks of ODVA.

Go!, SensorDAQ, and Vernier are registered trademarks of Vernier Software & Technology. Vernier Software & Technology and vernier.com are trademarks or trade dress.

Xilinx is the registered trademark of Xilinx, Inc.

Taptite and Trilobular are registered trademarks of Research Engineering & Manufacturing Inc.

FireWire® is the registered trademark of Apple Inc.

Linux® is the registered trademark of Linus Torvalds in the U.S. and other countries.

Handle Graphics®, MATLAB®, Simulink®, Stateflow®, and xPC TargetBox® are registered trademarks, and Simulink Coder™, TargetBox™, and Target Language Compiler™ are trademarks of The MathWorks, Inc.

Tektronix®, Tek, and Tektronix, Enabling Technology are registered trademarks of Tektronix, Inc.

The Bluetooth® word mark is a registered trademark owned by the Bluetooth SIG, Inc.

The ExpressCard™ word mark and logos are owned by PCMCIA and any use of such marks by National Instruments is under license.

The mark LabWindows is used under a license from Microsoft Corporation. Windows is a registered trademark of Microsoft Corporation in the United States and other countries.

Other product and company names mentioned herein are trademarks or trade names of their respective companies.

Members of the National Instruments Alliance Partner Program are business entities independent from NI and have no agency, partnership, or joint-venture relationship with NI.

Patents

For patents covering NI products/technology, refer to the appropriate location: **Help»Patents** in your software, the patents.txt file on your media, or the *National Instruments Patent Notice* at ni.com/patents.

Export Compliance Information

Refer to the *Export Compliance Information* at ni.com/legal/export-compliance for the NI global trade compliance policy and how to obtain relevant HTS codes, ECCNs, and other import/export data.

WARNING REGARDING USE OF NATIONAL INSTRUMENTS PRODUCTS

YOU ARE ULTIMATELY RESPONSIBLE FOR VERIFYING AND VALIDATING THE SUITABILITY AND RELIABILITY OF THE PRODUCTS WHENEVER THE PRODUCTS ARE INCORPORATED IN YOUR SYSTEM OR APPLICATION, INCLUDING THE APPROPRIATE DESIGN, PROCESS, AND SAFETY LEVEL OF SUCH SYSTEM OR APPLICATION.

PRODUCTS ARE NOT DESIGNED, MANUFACTURED, OR TESTED FOR USE IN LIFE OR SAFETY CRITICAL SYSTEMS, HAZARDOUS ENVIRONMENTS OR ANY OTHER ENVIRONMENTS REQUIRING FAIL-SAFE PERFORMANCE, INCLUDING IN THE OPERATION OF NUCLEAR FACILITIES; AIRCRAFT NAVIGATION; AIR TRAFFIC CONTROL SYSTEMS; LIFE SAVING OR LIFE SUSTAINING SYSTEMS OR SUCH OTHER MEDICAL DEVICES; OR ANY OTHER APPLICATION IN WHICH THE FAILURE OF THE PRODUCT OR SERVICE COULD LEAD TO DEATH, PERSONAL INJURY, SEVERE PROPERTY DAMAGE OR ENVIRONMENTAL HARM (COLLECTIVELY, “HIGH-RISK USES”). FURTHER, PRUDENT STEPS MUST BE TAKEN TO PROTECT AGAINST FAILURES, INCLUDING PROVIDING BACK-UP AND SHUT-DOWN MECHANISMS. NI EXPRESSLY DISCLAIMS ANY EXPRESS OR IMPLIED WARRANTY OF FITNESS OF THE PRODUCTS OR SERVICES FOR HIGH-RISK USES.

Contents

Chapter 1
Getting Started with the cDAQ Chassis

Safety Guidelines 1-3
Safety Guidelines for Hazardous Voltages 1-3
Electromagnetic Compatibility Guidelines 1-3
Hardware Symbol Definitions 1-4
Unpacking 1-4
Installing the cDAQ Chassis 1-5
Mounting the cDAQ Chassis 1-7
Using the cDAQ Chassis on a Desktop 1-8
NI 9901 Desktop Kit for cDAQ-9174/9178 Chassis 1-8
Mounting the cDAQ Chassis on a Panel 1-9
cDAQ-9171 1-9
cDAQ-9174/9178 1-9
Mounting the cDAQ-9174/9178 on a DIN Rail 1-11
cDAQ Chassis Features 1-12
LEDs 1-12
USB Port and Cable Strain Relief 1-13
TRIG 0 (PFI 0) and TRIG 1 (PFI 1) BNC Connectors 1-13
Power Connector 1-13
Chassis Grounding Screw 1-13
Cables and Accessories 1-14
Removing Modules from the Chassis 1-14
Using the cDAQ Chassis 1-15
C Series Module 1-15
Parallel versus Serial DIO Modules 1-16
cDAQ Module Interface 1-16
STC3 1-16

Chapter 2
Analog Input

Analog Input Triggering Signals 2-1
Analog Input Timing Signals 2-1
AI Sample Clock Signal 2-2
Routing the Sample Clock to an Output Terminal 2-2
AI Sample Clock Timebase Signal 2-2
AI Convert Clock Signal Behavior For Analog Input Modules 2-2
Scanned Modules 2-3
Simultaneous Sample-and-Hold Modules 2-3
Sigma-Delta Modules 2-3
Slow Sample Rate Modules 2-4

AI Start Trigger Signal 2-5
Using a Digital Source 2-5
Using an Analog Source 2-5
Routing AI Start Trigger to an Output Terminal 2-5
AI Reference Trigger Signal 2-5
Using a Digital Source 2-6
Using an Analog Source 2-6
Routing the Reference Trigger Signal to an Output Terminal 2-7
AI Pause Trigger Signal 2-7
Using a Digital Source 2-7
Using an Analog Source 2-7
Getting Started with AI Applications in Software 2-7

Chapter 3
Analog Output

Analog Output Data Generation Methods 3-1
Software-Timed Generations 3-1
Hardware-Timed Generations 3-2
Buffered Analog Output 3-2
Analog Output Triggering Signals 3-3
Analog Output Timing Signals 3-3
AO Sample Clock Signal 3-3
Routing AO Sample Clock to an Output Terminal 3-3
AO Sample Clock Timebase Signal 3-4
AO Start Trigger Signal 3-4
Using a Digital Source 3-4
Using an Analog Source 3-4
Routing AO Start Trigger Signal to an Output Terminal 3-4
AO Pause Trigger Signal 3-5
Using a Digital Source 3-5
Using an Analog Source 3-5
Minimizing Glitches on the Output Signal 3-6
Getting Started with AO Applications in Software 3-6

Chapter 4
Digital Input/Output and PFI

Digital Input/Output 4-1
Serial DIO versus Parallel DIO Modules 4-1
Static DIO 4-2
Digital Input 4-2
Digital Input Triggering Signals 4-2
Digital Input Timing Signals 4-2
Digital Input Filters 4-6
Getting Started with DI Applications in Software 4-7

Change Detection Event 4-7
Routing Change Detection Event to an Output Terminal 4-7
Change Detection Acquisition 4-7
Digital Output 4-8
Digital Output Data Generation Methods 4-8
Digital Output Triggering Signals 4-10
Digital Output Timing Signals 4-10
Getting Started with DO Applications in Software 4-13
Digital Input/Output Configuration for NI 9401 4-13
PFI 4-13
PFI Filters 4-13

Chapter 5
Counters

Counter Timing Engine 5-1
Counter Input Applications 5-3
Counting Edges 5-3
Single Point (On-Demand) Edge Counting 5-3
Buffered (Sample Clock) Edge Counting 5-4
Controlling the Direction of Counting 5-4
Pulse-Width Measurement 5-5
Single Pulse-Width Measurement 5-5
Implicit Buffered Pulse-Width Measurement 5-6
Sample Clocked Buffered Pulse-Width Measurement 5-6
Pulse Measurement 5-7
Single Pulse Measurement 5-7
Implicit Buffered Pulse Measurement 5-7
Sample Clocked Buffered Pulse Measurement 5-8
Semi-Period Measurement 5-8
Single Semi-Period Measurement 5-9
Implicit Buffered Semi-Period Measurement 5-9
Pulse versus Semi-Period Measurements 5-10
Frequency Measurement 5-10
Low Frequency with One Counter 5-10
High Frequency with Two Counters 5-11
Large Range of Frequencies with Two Counters 5-12
Sample Clocked Buffered Frequency Measurement 5-13
Choosing a Method for Measuring Frequency 5-14
Which Method Is Best? 5-15
Period Measurement 5-18
Position Measurement 5-18
Measurements Using Quadrature Encoders 5-18
Channel Z Behavior 5-19
Measurements Using Two Pulse Encoders 5-20
Buffered (Sample Clock) Position Measurement 5-20

Two-Signal Edge-Separation Measurement 5-21
Single Two-Signal Edge-Separation Measurement 5-21
Implicit Buffered Two-Signal Edge-Separation Measurement 5-22
Sample Clocked Buffered Two-Signal Separation Measurement 5-22
Counter Output Applications 5-23
Simple Pulse Generation 5-23
Single Pulse Generation 5-23
Single Pulse Generation with Start Trigger 5-24
Pulse Train Generation 5-24
Finite Pulse Train Generation 5-25
Retriggerable Pulse or Pulse Train Generation 5-25
Continuous Pulse Train Generation 5-26
Buffered Pulse Train Generation 5-27
Finite Implicit Buffered Pulse Train Generation 5-27
Continuous Buffered Implicit Pulse Train Generation 5-28
Finite Buffered Sample Clocked Pulse Train Generation 5-28
Continuous Buffered Sample Clocked Pulse Train Generation 5-29
Frequency Generation 5-30
Using the Frequency Generator 5-30
Frequency Division 5-31
Pulse Generation for ETS 5-31
Counter Timing Signals 5-32
Counter *n* Source Signal 5-32
Routing a Signal to Counter *n* Source 5-33
Routing Counter *n* Source to an Output Terminal 5-33
Counter *n* Gate Signal 5-33
Routing a Signal to Counter *n* Gate 5-33
Routing Counter *n* Gate to an Output Terminal 5-34
Counter *n* Aux Signal 5-34
Routing a Signal to Counter *n* Aux 5-34
Counter *n* A, Counter *n* B, and Counter *n* Z Signals 5-34
Routing Signals to A, B, and Z Counter Inputs 5-34
Routing Counter *n* Z Signal to an Output Terminal 5-34
Counter *n* Up_Down Signal 5-35
Counter *n* HW Arm Signal 5-35
Routing Signals to Counter *n* HW Arm Input 5-35
Counter *n* Sample Clock Signal 5-35
Using an Internal Source 5-36
Using an External Source 5-36
Routing Counter *n* Sample Clock to an Output Terminal 5-36
Counter *n* Internal Output and Counter *n* TC Signals 5-36
Routing Counter *n* Internal Output to an Output Terminal 5-36
Frequency Output Signal 5-36
Routing Frequency Output to a Terminal 5-37
Default Counter/Timer Routing 5-37

Counter Triggering 5-37
Other Counter Features 5-38
Cascading Counters 5-38
Prescaling 5-38
Synchronization Modes 5-38
80 MHz Source Mode 5-39
External or Internal Source Less than 20 MHz 5-39

Chapter 6
Digital Routing and Clock Generation
Digital Routing 6-1
Clock Routing 6-1
80 MHz Timebase 6-1
20 MHz Timebase 6-2
100 kHz Timebase 6-2

Appendix A
Where to Go from Here

Appendix B
NI Services

Index

1

Getting Started with the cDAQ Chassis

This chapter provides an NI CompactDAQ chassis overview and lists information about mounting the chassis and installing C Series modules.

The one-slot NI cDAQ-9171, four-slot NI cDAQ-9174, and eight-slot NI cDAQ-9178 USB chassis are designed for use with C Series modules. The cDAQ chassis are capable of measuring a broad range of analog and digital I/O signals using a Hi-Speed USB 2.0 interface. For module specifications, refer to the documentation included with your C Series module(s) or go to ni.com/manuals.

Figure 1-1 shows the cDAQ-9171 chassis.

Figure 1-1. cDAQ-9171 Chassis

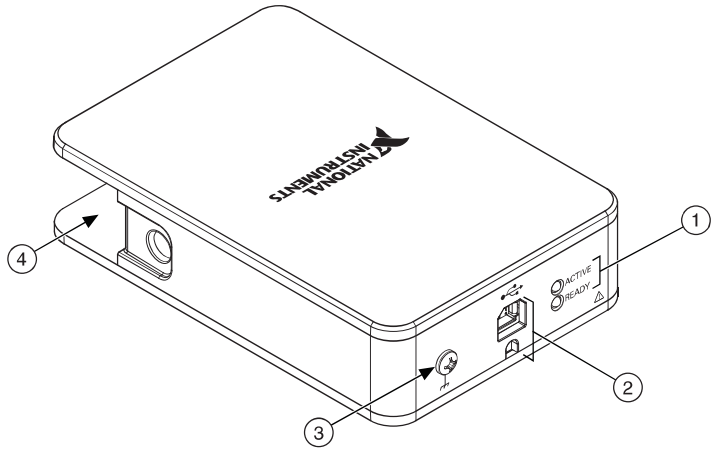

1	ACTIVE and READY LEDs	3	Chassis Grounding Screw
2	USB Connector with Strain Relief	4	Module Slot

Figure 1-2 shows the cDAQ-9174 chassis.

Figure 1-2. cDAQ-9174 Chassis

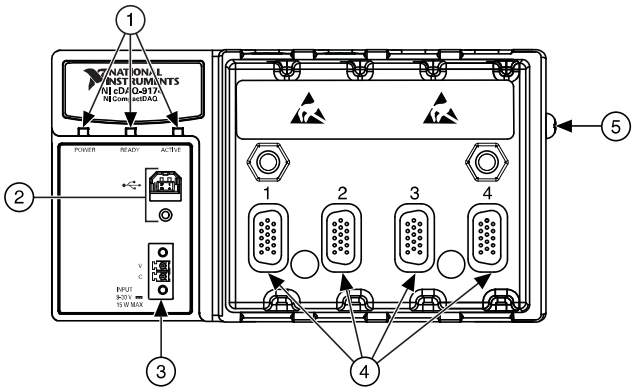

1	POWER, READY, and ACTIVE LEDs	4	Module Slots
2	USB Connector with Strain Relief	5	Chassis Grounding Screw
3	Power Connector		

Figure 1-3 shows the cDAQ-9178 chassis.

Figure 1-3. cDAQ-9178 Chassis

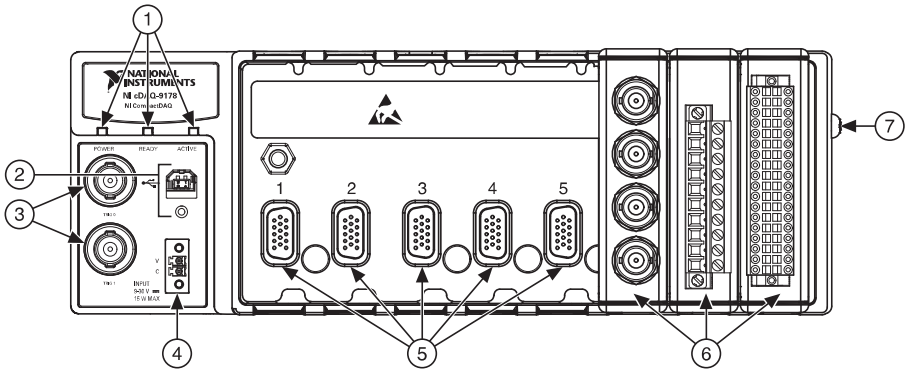

1	POWER, READY, and ACTIVE LEDs	5	Module Slots
2	USB Connector with Strain Relief	6	Installed C Series Modules
3	TRIG 0 (PFI 0) and TRIG 1 (PFI 1) BNC Connectors	7	Chassis Grounding Screw
4	Power Connector		

Safety Guidelines

Operate the NI cDAQ-9171/9174/9178 chassis only as described in this user manual.

Note Because some C Series modules may have more stringent certification standards than the NI cDAQ-9171/9174/9178 chassis, the combined system may be limited by individual component restrictions. Refer to the specifications document for your cDAQ chassis for more details.

Caution The NI cDAQ-9174/9178 chassis is *not* certified for use in hazardous locations.

Hot Surface This icon denotes that the component may be hot. Touching this component may result in bodily injury.

Safety Guidelines for Hazardous Voltages

If *hazardous voltages* are connected to the module, take the following precautions. A hazardous voltage is a voltage greater than 42.4 V_{pk} or 60 VDC to earth ground.

Caution Ensure that hazardous voltage wiring is performed only by qualified personnel adhering to local electrical standards.

Caution Do *not* mix hazardous voltage circuits and human-accessible circuits on the same module.

Caution Make sure that chassis and circuits connected to the module are properly insulated from human contact.

Caution The NI cDAQ-9171/9174/9178 chassis provides no isolation, but some modules offer isolation. Follow the safety guidelines for each module when using hazardous voltage.

Electromagnetic Compatibility Guidelines

This product was tested and complies with the regulatory requirements and limits for electromagnetic compatibility (EMC) as stated in the product specifications. These requirements and limits are designed to provide reasonable protection against harmful interference when the product is operated in its intended operational electromagnetic environment.

This product is intended for use in industrial locations. There is no guarantee that harmful interference will not occur in a particular installation, when the product is connected to a test object, or if the product is used in residential areas. To minimize the potential for the product to cause interference to radio and television reception or to experience unacceptable performance

degradation, install and use this product in strict accordance with the instructions in the product documentation.

Furthermore, any changes or modifications to the product not expressly approved by National Instruments could void your authority to operate it under your local regulatory rules.

Caution To ensure the specified EMC performance, operate this product only with shielded cables and accessories.

Caution This product may become more sensitive to electromagnetic disturbances in the operational environment when test leads are attached or when connected to a test object.

Hardware Symbol Definitions

The following symbols are marked on your cDAQ chassis.

Caution When this symbol is marked on a product, refer to the user documentation for information about precautions to take.

ESD When this symbol is marked on a product, the product could be damaged if subjected to Electrostatic Discharge (ESD) on the connector pins of any I/O port. To prevent damage, industry-standard ESD prevention measures must be employed during installation, maintenance, and operation.

EU Customers At the end of the product life cycle, all products *must* be sent to a WEEE recycling center. For more information about WEEE recycling centers, National Instruments WEEE initiatives, and compliance with WEEE Directive 2002/96/EC on Waste and Electronic Equipment, visit `ni.com/environment/weee`.

中国客户 National Instruments 符合中国电子信息产品中限制使用某些有害物质指令 (RoHS)。关于 National Instruments 中国 RoHS 合规性信息，请登录 `ni.com/environment/rohs_china`。 (For information about China RoHS compliance, go to `ni.com/environment/rohs_china`.)

Unpacking

The cDAQ chassis ships in an antistatic package to prevent electrostatic discharge (ESD). ESD can damage several components on the device.

Caution *Never* touch the exposed pins of connectors.

To avoid ESD damage in handling the device, take the following precautions:

- Ground yourself with a grounding strap or by touching a grounded object.
- Touch the antistatic package to a metal part of your computer chassis before removing the device from the package.

Remove the device from the package and inspect it for loose components or any other signs of damage. Notify NI if the device appears damaged in any way. Do not install a damaged device in your computer or chassis.

Store the device in the antistatic package when the device is not in use.

Installing the cDAQ Chassis

The cDAQ chassis and C Series module(s) are packaged separately. For an interactive demonstration of how to install the cDAQ chassis, go to ni.com/info and enter cdaqinstall.

You will need the following items to set up the cDAQ chassis:

- Power adapter (packaged with the cDAQ chassis)
- Locking USB cable (packaged with the cDAQ chassis)
- Screwdriver (packaged with the cDAQ-9174/9178 chassis)
- Host computer running Windows
- Application software (such as LabVIEW), if not already installed
- NI-DAQmx driver (packaged with the cDAQ chassis)
- Number 1 and number 2 Phillips screwdrivers
- C Series module(s)

Refer to Figure 1-1, 1-2, or 1-3 while completing the following assembly steps.

1. Install the application software (if applicable), as described in the installation instructions that accompany your software.
2. Install NI-DAQmx. For more information, download the *Read Me First: NI-DAQmx and DAQ Device Installation Guide*.

Note The NI-DAQmx software is included on the disk shipped with your kit and is available for download at ni.com/support. The documentation for NI-DAQmx is available after installation from **Start»All Programs»National Instruments» NI-DAQ**. Other NI documentation is available from ni.com/manuals.

Table 1-1 lists the earliest NI-DAQmx support version for each cDAQ chassis.

Table 1-1. cDAQ Chassis NI-DAQmx Software Support

cDAQ Chassis	NI-DAQmx Version Support
cDAQ-9171	NI-DAQmx 9.4 and later
cDAQ-9174	NI-DAQmx 9.0.2 and later
cDAQ-9178	NI-DAQmx 9.0.2 and later

3. (Optional) Mount the cDAQ chassis to a panel, wall, or DIN rail as described in the *Mounting the cDAQ Chassis* section.
4. Attach a ring lug to a 1.31 mm^2 (16 AWG) or larger wire. Connect the ring lug to the chassis ground terminal on the side of the cDAQ chassis using the chassis grounding screw as shown in Figure 1-4. Attach the other end of the wire to the grounding electrode system of your facility. Refer to the *Chassis Grounding Screw* section for more information about making this connection.

Note If you use shielded cabling to connect to a C Series module with a plastic connector, you must attach the cable shield to the chassis grounding terminal using 1.31 mm^2 (16 AWG) or larger wire. Use shorter wire for better EMC performance.

Figure 1-4. Ring Lug Attached to Ground Terminal

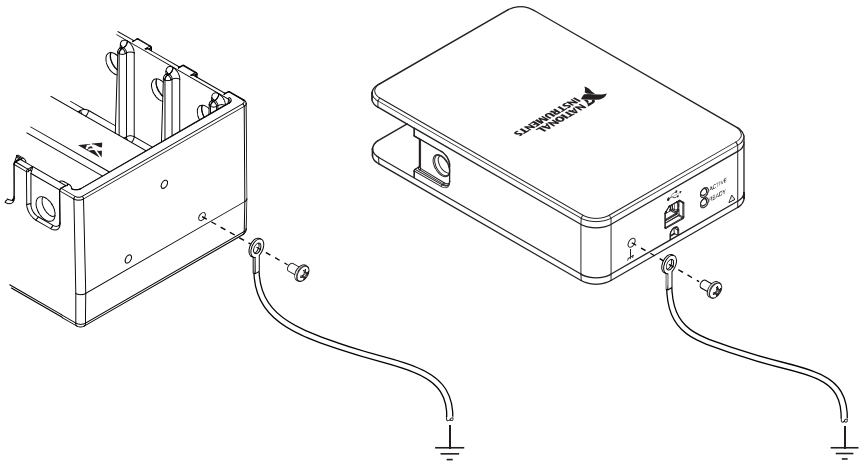

5. Make sure that no signals are connected to the C Series module.
6. Align the C Series module with the cDAQ chassis slot.

7. Squeeze both C Series module latches, insert the module into the module slot, and press until both latches lock the module in place.
8. Wire the C Series module as indicated in the C Series module documentation.

Note Connect I/O cable shields to the chassis grounding screw, shown in Figure 1-4, unless otherwise specified in the C Series module documentation. Refer to the *Chassis Grounding Screw* section for more information about making this connection.

9. Connect the cDAQ chassis with the USB cable to any available USB port on your computer. If you are using a locking USB cable, use the jackscrew to securely attach the cable to the chassis.
10. **(cDAQ-9174/9178)** Connect the supplied power source to the cDAQ chassis. The cDAQ-9174/9178 chassis requires an external power supply that meets the specifications listed in the specifications document for your cDAQ chassis.
11. Double-click the **NI MAX** icon on the desktop to open Measurement & Automation Explorer (MAX).
12. Expand **Devices and Interfaces** and verify that your chassis is listed there. If your chassis does not appear, press <F5> to refresh the view in MAX. If your chassis is still not recognized, refer to `ni.com/support/daqmx` for troubleshooting information.
13. Self-test your chassis in MAX by expanding **Devices and Interfaces**, right-clicking **NI cDAQ-<*model number*>**, and selecting **Self-Test**. Self-test performs a brief test to determine successful chassis installation. When the self-test finishes, a message indicates successful verification or if an error occurred. If an error occurs, refer to `ni.com/support/daqmx`.
14. Run a Test Panel in MAX by expanding **Devices and Interfaces» NI cDAQ-<*model number*>**, right-clicking your C Series module, and selecting **Test Panels** to open a test panel for the selected module.

    If the test panel displays an error message, refer to `ni.com/support`.

    Click **Close** to exit the test panel.

Note When in use, the cDAQ chassis may become warm to the touch. This is normal.

Mounting the cDAQ Chassis

You can use the cDAQ chassis on a desktop or mount it to a panel or wall. You can also mount the cDAQ-9174/9178 on a DIN rail. For accessory ordering information, refer to the pricing section of your cDAQ chassis product page at `ni.com`.

Caution Your installation must meet the following requirements:

- Allows 25.4 mm (1 in.) of clearance above and below the cDAQ chassis for air circulation.
- Allows at least 50.8 mm (2 in.) of clearance in front of the modules for common connector cabling such as the 10-terminal detachable screw terminal connector and, as needed, up to 88.9 mm (3.5 in.) of clearance in front of the modules for other types of cabling.

For more information about cabling clearances for C Series modules, refer to ni.com/info and enter the Info Code cseriesconn.

Using the cDAQ Chassis on a Desktop

You can use the cDAQ chassis on a desktop. cDAQ-9174/9178 users can install an optional desktop mounting kit.

Caution Do *not* stack the cDAQ chassis.

NI 9901 Desktop Kit for cDAQ-9174/9178 Chassis

The NI 9901 desktop mounting kit includes two metal feet you can install on the sides of the cDAQ-9174/9178 chassis for desktop use. With this kit, you can tilt the cDAQ chassis for convenient access to the module connectors. When you install the two metal feet, the two existing screws on the back side and I/O end of the chassis must be removed, as shown in Figure 1-5. After removing the screws, replace them with the two M3 × 14 screws included in the NI 9901 desktop mounting kit.

Figure 1-5. NI 9901 Desktop Mounting Kit

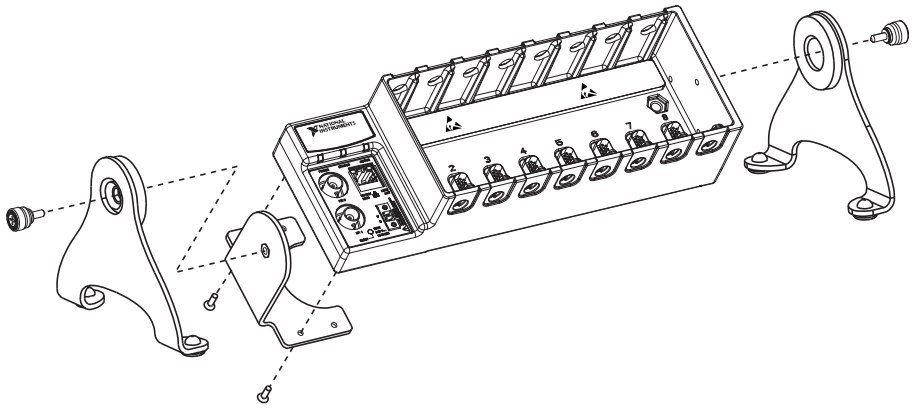

You must mount the chassis *before* installing the C Series modules.

Mounting the cDAQ Chassis on a Panel

You do not need a kit to panel mount the cDAQ-9171 chassis. You can use a panel mount kit to mount the cDAQ-9174/9178 chassis to a panel. For kit accessory ordering information, refer to the pricing section of your cDAQ chassis product page at ni.com.

cDAQ-9171

Two keyholes are located on the cDAQ-9171 for mounting it to a panel or wall. You can panel mount the cDAQ-9171 with either #6-32 panhead machine screws or M3.5 panhead machine screws. Installed screw height for both screw types is 7.37 mm (0.29 in.). Refer to the *NI cDAQ-9171 Specifications* for mounting dimensions.

cDAQ-9174/9178

You can panel mount the cDAQ chassis with or without a panel mount kit:

- **Panel Mounting with a Panel Mount Kit**—Use the NI 9904 panel mount kit to mount the cDAQ-9174 chassis on a panel. Use the NI 9905 panel mount kit to mount the cDAQ-9178 chassis on a panel.

Caution Remove the C Series module(s) from the cDAQ chassis before you mount the chassis to the panel. After the cDAQ chassis is mounted, you can reinsert the C Series module.

Align the cDAQ chassis on the panel mount accessory and attach the chassis to the accessory with two M4 × 17 screws (included in the kit), as shown in Figure 1-6. You *must* use these screws because they are the correct depth and thread for the panel. You can then attach the panel mount accessory to a wall or panel with the two holes or the four keyholes with M4, M5, No. 8, or No.10 panhead screws. Refer to the documentation included with the panel mount kit for more detailed dimensions.

Figure 1-6. cDAQ-9174/9178 Panel Mount Dimensions and Installation

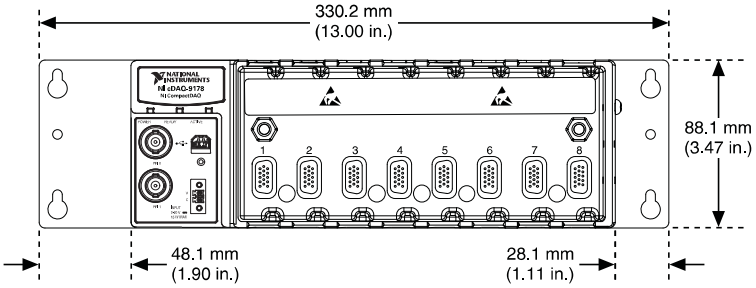

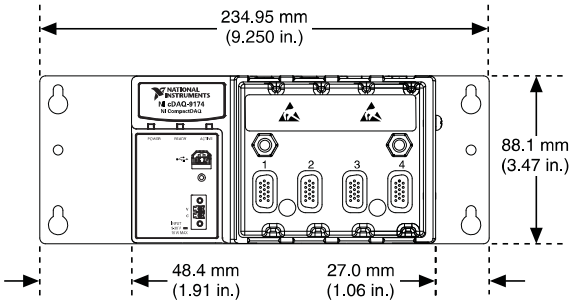

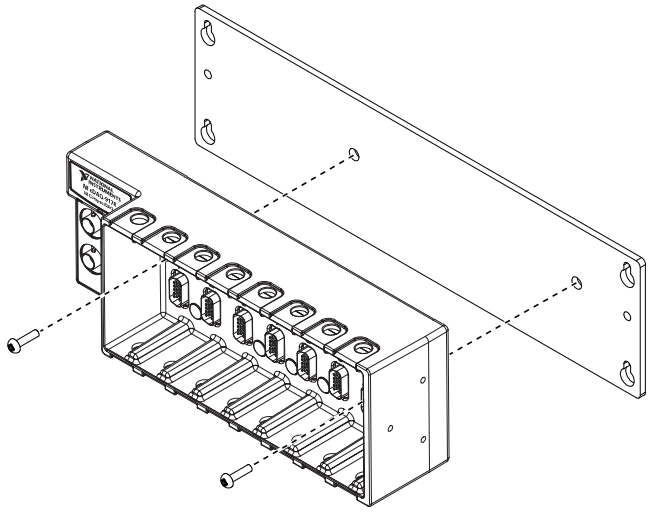

- **Panel Mounting without a Panel Mount Kit**—You can mount the cDAQ chassis directly on a flat surface using the mounting holes. Align the chassis on the surface. Then, fasten the chassis to the surface using two screws as shown in Figure 1-7. The cDAQ-9174 uses two M4 or No. 8 flathead screws. The cDAQ-9178 uses two M4 or No. 8 panhead screws. National Instruments does *not* provide these screws with the chassis.

Figure 1-7. Mounting the cDAQ Chassis Directly on a Flat Surface

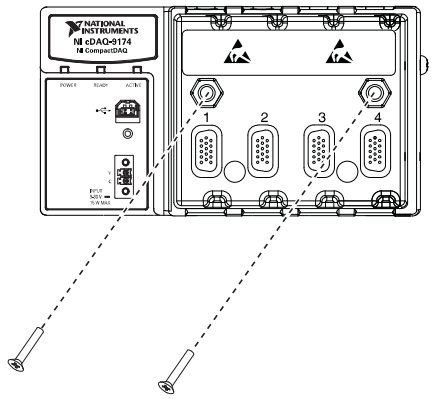

Refer to the specifications document for your cDAQ chassis for mounting dimensions.

Caution Make sure that no modules are in the chassis before removing it from the surface.

Mounting the cDAQ-9174/9178 on a DIN Rail

Use the NI 9912 DIN rail kit to mount the cDAQ-9174 chassis on a DIN rail. Use the NI 9915 DIN rail kit with the cDAQ-9178 chassis on a DIN rail.

Each DIN rail kit contains one clip for mounting the chassis on a standard 35 mm DIN rail. To mount the chassis on a DIN rail, fasten the DIN rail clip to the chassis using a number 2 Phillips screwdriver and two M4 × 17 screws. The screws are included in the DIN rail kit. Make sure the DIN rail kit is installed as illustrated in Figure 1-8, with the larger lip of the DIN clip positioned up. When the DIN rail kit is properly installed, the cDAQ chassis is centered on the DIN rail.

Figure 1-8. cDAQ-9174/9178 DIN Rail Installation

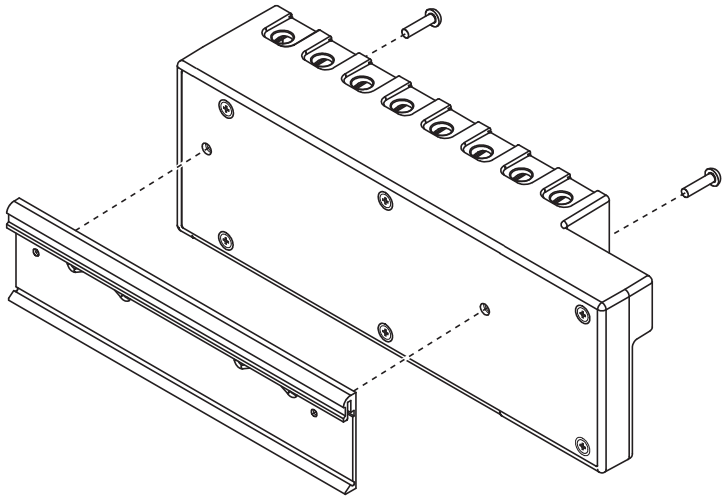

Clip the chassis onto the DIN rail with the larger lip of the DIN clip positioned up, as shown in Figure 1-9.

Figure 1-9. DIN Rail Clip Parts Locator Diagram

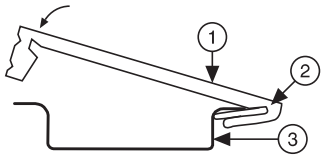

1	DIN Rail Clip	2	DIN Rail Spring	3	DIN Rail

Caution Remove the modules before removing the chassis from the DIN rail.

cDAQ Chassis Features

The cDAQ chassis features a chassis grounding screw, USB cable strain relief, and LEDs. Multislot cDAQ chassis have a power connector and the cDAQ-9178 chassis also features two TRIG (PFI) BNC connectors. Refer to Figure 1-1, 1-2, or 1-3 for locations of the cDAQ chassis features.

LEDs

The cDAQ chassis features two status LEDs: ACTIVE and READY. The ACTIVE LED indicates cDAQ chassis USB bus communication. The READY LED lights when the cDAQ chassis is ready for use.

The cDAQ-9174/9178 chassis also features a POWER status LED.

Table 1-2. LED State/Chassis Status

Status LED	LED Color		
	Green	Amber	Off
ACTIVE	USB traffic present	Unconfigured	No USB traffic present/suspend
READY	Full-Speed (12 Mb/s)	Hi-Speed (480 Mb/s)	USB connection is not established/suspend
POWER*	Power supplied	—	No power supplied
* cDAQ-9174/9178 chassis only.			

USB Port and Cable Strain Relief

The cDAQ chassis features a Hi-Speed USB 2.0 interface. You can provide strain relief for the USB cable by using the jackscrew on a locking USB cable to securely attach the cable to the chassis.

Caution **(cDAQ-9171)** The USB port requires a locking USB cable (part number 198506-01, 1 m, included in kit, or 780534-01, 2 m, available from ni.com) for hazardous locations. The USB cable must be used in a conduit or cable gland to wire to a nonhazardous location. Do not disconnect the cable unless the cDAQ-9171 is powered off or the area is known to be nonhazardous.

TRIG 0 (PFI 0) and TRIG 1 (PFI 1) BNC Connectors

(cDAQ-9178) Refer to the *PFI* section of Chapter 4, *Digital Input/Output and PFI*, for information about the BNC connectors for TRIG 0 (PFI 0) and TRIG 1 (PFI 1).

Power Connector

(cDAQ-9174/9178) Refer to the specifications document for your cDAQ chassis for information about the power connector on the cDAQ-9174/9178 chassis.

Chassis Grounding Screw

Caution To ensure the specified EMC performance, the cDAQ chassis *must* be connected to the grounding electrode system of your facility using the chassis ground terminal.

The wire should be 1.31 mm^2 (16 AWG) or larger solid copper wire with a maximum length of 1.5 m (5 ft). Attach the wire to the earth ground of the facility's power system. For more

information about earth ground connections, refer to the KnowledgeBase document, *Grounding for Test and Measurement Devices*, by going to ni.com/info and entering the Info Code emcground.

Note If you use shielded cabling to connect to a C Series module with a plastic connector, you must attach the cable shield to the chassis grounding terminal using 1.31 mm^2 (16 AWG) or larger wire. Use shorter wire for better EMC performance.

Cables and Accessories

Table 1-3 contains information about cables and accessories available for the cDAQ chassis. For a complete list of cDAQ chassis accessories and ordering information, refer to the pricing section of your cDAQ chassis product page at ni.com.

Table 1-3. cDAQ Chassis Cables and Accessories

Accessory	Part Number	cDAQ Chassis
NI 9901 desktop mounting kit	779473-01	cDAQ-9174/9178
NI 9904 panel mount kit	779097-01	cDAQ-9174
NI 9905 panel mount kit	779558-01	cDAQ-9178
NI 9912 DIN rail kit	779019-01	cDAQ-9174
NI 9915 DIN rail kit	779018-01	cDAQ-9178
2-pos screw terminal kit for power supply connection, qty 4	780702-01	cDAQ-9174/9178
Locking USB cable, (1 m length)	198506-01	All
Locking USB cable, (2 m length)	780534-01	All

Removing Modules from the Chassis

Complete the following steps to remove a C Series module from the chassis.

1. Make sure that no I/O-side power is connected to the module. If the system is in a nonhazardous location, the chassis power can be on when you remove modules.
2. Squeeze the latches on both sides of the module and pull the module out of the chassis.

Using the cDAQ Chassis

The cDAQ system consists of three parts—C Series module(s), the cDAQ module interface, and the STC3—as shown in Figure 1-10. These components digitize signals, perform D/A conversions to generate analog output signals, measure and control digital I/O signals, and provide signal conditioning.

Figure 1-10. Block Diagram

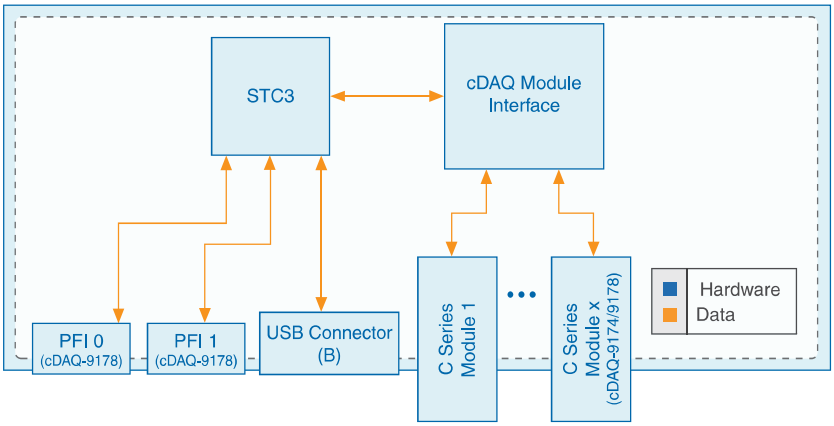

C Series Module

National Instruments C Series modules provide built-in signal conditioning and screw terminal, spring terminal, BNC, D-SUB, or RJ-50 connectors. A wide variety of I/O types are available, allowing you to customize the cDAQ system to meet your application needs.

C Series modules are hot-swappable and automatically detected by the cDAQ chassis. I/O channels are accessible using the NI-DAQmx driver software.

Because the modules contain built-in signal conditioning for extended voltage ranges or industrial signal types, you can usually make your wiring connections directly from the C Series modules to your sensors/actuators. In most cases, the C Series modules provide isolation from channel-to-earth ground and channel-to-channel.

For more information about which C Series modules are compatible with the cDAQ chassis, go to ni.com/info and enter the Info Code rdcdaq.

Parallel versus Serial DIO Modules

Digital C Series module capabilities are determined by the type of digital signals that the module is capable of measuring or generating.

- Serial digital C Series modules are designed for signals that change slowly and are accessed by software-timed reads and writes.
- Parallel digital C Series modules are for signals that change rapidly and are updated by either software-timed or hardware-timed reads and writes.

For more information about digital C Series modules, refer to Chapter 4, *Digital Input/Output and PFI*.

cDAQ Module Interface

The cDAQ module interface manages data transfers between the STC3 and the C Series modules. The interface also handles autodetection, signal routing, and synchronization.

STC3

The STC3 features independent high-speed data streams; flexible AI, AO, and DIO sample timing; triggering; PFI signals for multi-device synchronization; flexible counter/timers with hardware gating; digital waveform acquisition and generation; and static DIO.

- **AI, AO, and DIO Sample Timing**—The STC3 contains advanced AI, AO, and DIO timing engines. A wide range of timing and synchronization signals are available through the PFI lines. Refer to the following sections for more information about the configuration of these signals:
  - The *Analog Input Timing Signals* section of Chapter 2, *Analog Input*
  - The *Analog Output Timing Signals* section of Chapter 3, *Analog Output*
  - The *Digital Input Timing Signals* section of Chapter 4, *Digital Input/Output and PFI*
  - The *Digital Output Timing Signals* section of Chapter 4, *Digital Input/Output and PFI*
- **Triggering Modes**—The cDAQ chassis supports different trigger modes, such as start trigger, reference trigger, and pause trigger with analog, digital, or software sources. Refer to the following sections for more information:
  - The *Analog Input Triggering Signals* section of Chapter 2, *Analog Input*
  - The *Analog Output Triggering Signals* section of Chapter 3, *Analog Output*
  - The *Digital Input Triggering Signals* section of Chapter 4, *Digital Input/Output and PFI*
  - The *Digital Output Triggering Signals* section of Chapter 4, *Digital Input/Output and PFI*

- **Independent Data Streams**—The cDAQ-9171 supports six independent high-speed data streams, which allow for up to six simultaneous hardware-timed tasks, such as analog input, analog output, buffered counter/timers, and hardware-timed digital input/output.

  The cDAQ-9174/9178 supports seven independent high-speed data streams, which allow for up to seven simultaneous hardware-timed tasks, such as analog input, analog output, buffered counter/timers, and hardware-timed digital input/output.
- **PFI Signals**—The PFI signals provide access to advanced features such as triggering, synchronization, and counter/timers. You can also enable a programmable debouncing filter on each PFI signal that, when enabled, samples the input on each rising edge of a filter clock. PFI signals are available through parallel digital input and output modules installed in up to two chassis slots and through the two PFI terminals provided on the cDAQ-9178 chassis. Refer to the *PFI* section of Chapter 4, *Digital Input/Output and PFI*, for more information.
- **Flexible Counter/Timers**—The cDAQ chassis includes four general-purpose 32-bit counter/timers that can be used to count edges, measure pulse-widths, measure periods and frequencies, and perform position measurements (encoding). In addition, the counter/timers can generate pulses, pulse trains, and square waves with adjustable frequencies. You can access the counter inputs and outputs using parallel digital I/O modules installed in up to two slots, or by using the two chassis PFI terminals provided on the cDAQ-9178 chassis. Refer to Chapter 5, *Counters*, for more information.

2 Analog Input

To perform analog input measurements, insert a supported analog input C Series module into any slot on the cDAQ chassis. The measurement specifications, such as number of channels, channel configuration, sample rate, and gain, are determined by the type of C Series module used. For more information and wiring diagrams, refer to the documentation included with your C Series modules.

(cDAQ-9174/9178) The cDAQ-9174/9178 has three AI timing engines, which means that three analog input tasks can be running at a time on a chassis. An analog input task can include channels from multiple analog input modules. However, channels from a single module cannot be used in multiple tasks.

Multiple timing engines allow the cDAQ-9174/9178 to run up to three analog input tasks simultaneously, each using independent timing and triggering configurations. The three AI timing engines are ai, te0, and te1.

Analog Input Triggering Signals

A trigger is a signal that causes an action, such as starting or stopping the acquisition of data. When you configure a trigger, you must decide how you want to produce the trigger and the action you want the trigger to cause. The cDAQ chassis supports internal software triggering, external digital triggering, and analog triggering.

Three triggers are available: Start Trigger, Reference Trigger, and Pause Trigger. An analog or digital trigger can initiate these three trigger actions. Up to two C Series parallel digital input modules can be used in any chassis slot to supply a digital trigger. To find your module triggering options, refer to the documentation included with your C Series modules. For more information about using digital modules for triggering, refer to Chapter 4, *Digital Input/Output and PFI*.

Refer to the *AI Start Trigger Signal*, *AI Reference Trigger Signal*, and *AI Pause Trigger Signal* sections for more information about the analog input trigger signals.

Analog Input Timing Signals

The cDAQ chassis features the following analog input timing signals:

- *AI Sample Clock Signal**
- *AI Sample Clock Timebase Signal*
- *AI Start Trigger Signal**

- *AI Reference Trigger Signal**
- *AI Pause Trigger Signal**

Signals with an * support digital filtering. Refer to the *PFI Filters* section of Chapter 4, *Digital Input/Output and PFI*, for more information.

Refer to the *AI Convert Clock Signal Behavior For Analog Input Modules* section for AI Convert Clock signals and the cDAQ chassis.

AI Sample Clock Signal

A sample consists of one reading from each channel in the AI task. SampleClock signals the start of a sample of all analog input channels in the task. SampleClock can be generated from external or internal sources as shown in Figure 2-1.

Figure 2-1. AI Sample Clock Timing Options

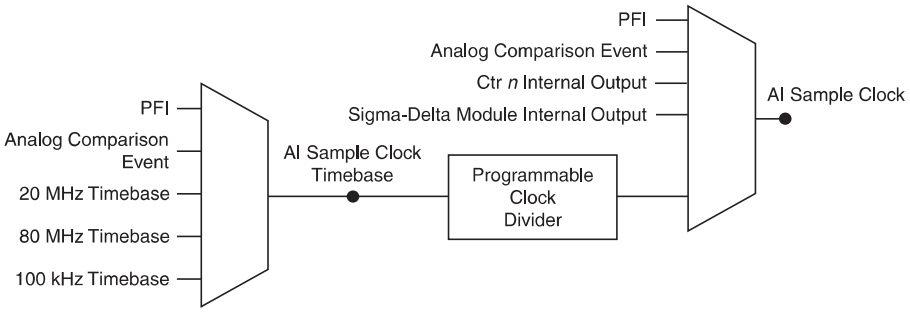

Routing the Sample Clock to an Output Terminal

You can route SampleClock to any output PFI terminal. SampleClock is an active high pulse by default.

AI Sample Clock Timebase Signal

The AI Sample Clock Timebase signal is divided down to provide a source for SampleClock. SampleClockTimebase can be generated from external or internal sources. SampleClockTimebase is not available as an output from the chassis.

AI Convert Clock Signal Behavior For Analog Input Modules

Refer to the *Scanned Modules*, *Simultaneous Sample-and-Hold Modules*, *Sigma-Delta Modules*, and *Slow Sample Rate Modules* sections for information about the AI Convert Clock signal and C Series modules.

Scanned Modules

Scanned C Series analog input modules contain a single A/D converter and a multiplexer to select between multiple input channels. When the cDAQ Module Interface receives a Sample Clock pulse, it begins generating a Convert Clock for each scanned module in the current task. Each Convert Clock signals the acquisition of a single channel from that module. The Convert Clock rate depends on the module being used, the number of channels used on that module, and the system Sample Clock rate.

The driver chooses the fastest conversion rate possible based on the speed of the A/D converter for each module and adds 10 µs of padding between each channel to allow for adequate settling time. This scheme enables the channels to approximate simultaneous sampling. If the AI Sample Clock rate is too fast to allow for 10 µs of padding, NI-DAQmx selects a conversion rate that spaces the AI Convert Clock pulses evenly throughout the sample. NI-DAQmx uses the same amount of padding for all the modules in the task. To explicitly specify the conversion rate, use the **ActiveDevs** and **AI Convert Clock Rate** properties using the **DAQmx Timing** property node or functions.

Simultaneous Sample-and-Hold Modules

Simultaneous sample-and-hold (SSH) C Series analog input modules contain multiple A/D converters or circuitry that allows all the input channels to be sampled at the same time. These modules sample their inputs on every Sample Clock pulse.

Sigma-Delta Modules

Sigma-delta C Series analog input modules function much like SSH modules, but use A/D converters that require a high-frequency oversample clock to produce accurate, synchronized data. Some sigma-delta modules in the cDAQ chassis automatically share a single oversample clock to synchronize data from all the modules that support an external oversample clock timebase when they all share the same task. (DSA modules are an example). The cDAQ chassis supports a maximum of two synchronization pulse signals configured for your system. This limits the system to two tasks with different oversample clock timebases.

The oversample clock is used as the AI Sample Clock Timebase. While most modules supply a common oversample clock frequency (12.8 MHz), some modules, such as the NI 9234, supply a different frequency. When sigma-delta modules with different oversample clock frequencies are used in an analog input task, the AI Sample Clock Timebase can use any of the available frequencies; by default, the fastest available is used. The sampling rate of all modules in the system is an integer divisor of the frequency of the AI Sample Clock Timebase.

When one or more sigma-delta modules are in an analog input task, the sigma-delta modules also provide the signal used as the AI Sample Clock. This signal is used to cause A/D conversion for other modules in the system, just as the AI Sample Clock does when a sigma-delta module is not being used.

When sigma-delta modules are in an AI task, the chassis automatically issues a synchronization pulse to each sigma-delta modules that resets their ADCs at the same time. Because of the

filtering used in sigma-delta A/D converters, these modules usually exhibit a fixed input delay relative to non-sigma-delta modules in the system. This input delay is specified in the C Series module documentation.

Slow Sample Rate Modules

(cDAQ-9174/9178) Some C Series analog input modules are specifically designed for measuring signals that vary slowly, such as temperature. Because of their slow rate, it is not appropriate for these modules to constrain the AI Sample Clock to operate at or slower than their maximum rate. When using such a module in the cDAQ-9174/9178 chassis, the maximum Sample Clock rate can run faster than the maximum rate for the module. When operating at a rate faster than these slow rate modules can support, the slow rate module returns the same point repeatedly, until a new conversion completes. In a hardware-timed task, the first point is acquired when the task is committed. The second point is acquired after the start trigger as shown in Figure 2-2.

Figure 2-2. Sample Clock Timing Example

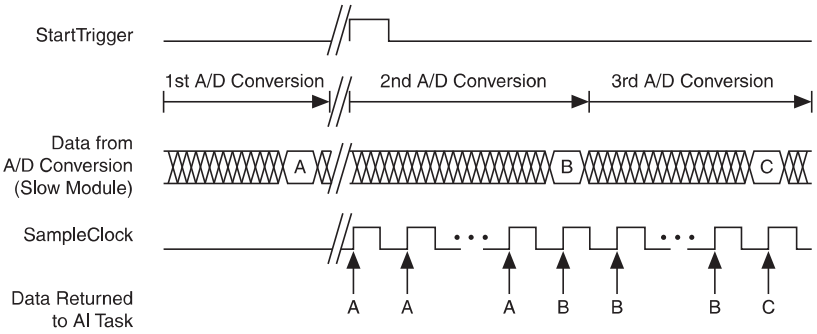

For example, if running an AI task at 1 kHz using a module with a maximum rate of 10 Hz, the slow module returns 100 samples of the first point, followed by 100 samples of the second point, etc. Other modules in the task will return 1,000 new data points per second, which is normal. When performing a single-point acquisition, no points are repeated. To avoid this behavior, use multiple AI timing engines, and assign slow sample rate modules to a task with a rate at or slower than their maximum rate.

Refer to *C Series Support in NI-DAQmx* for more information. To access this document, go to ni.com/info and enter the Info Code rdcdaq.

AI Start Trigger Signal

Use the Start Trigger signal to begin a measurement acquisition. A measurement acquisition consists of one or more samples. If you do not use triggers, begin a measurement with a software command. Once the acquisition begins, configure the acquisition to stop in one of the following ways:

- When a certain number of points has been sampled (in finite mode)
- After a hardware reference trigger (in finite mode)
- With a software command (in continuous mode)

An acquisition that uses a start trigger (but not a reference trigger) is sometimes referred to as a posttriggered acquisition. That is, samples are measured only after the trigger.

When you are using an internal sample clock, you can specify a default delay from the start trigger to the first sample.

Using a Digital Source

To use the Start Trigger signal with a digital source, specify a source and a rising or falling edge. Use the following signals as the source:

- Any PFI terminal
- Counter *n* Internal Output

The source also can be one of several other internal signals on your cDAQ chassis. Refer to the *Device Routing in MAX* topic in the *NI-DAQmx Help* or the *LabVIEW Help* for more information.

Using an Analog Source

Some C Series modules can generate a trigger based on an analog signal. In NI-DAQmx, this is called the Analog Comparison Event. When you use an analog trigger source for StartTrigger, the acquisition begins on the first rising edge of the Analog Comparison Event signal.

Note Depending on the C Series module capabilities, you may need two modules to utilize analog triggering.

Routing AI Start Trigger to an Output Terminal

You can route the Start Trigger signal to any output PFI terminal. The output is an active high pulse.

AI Reference Trigger Signal

Use Reference Trigger to stop a measurement acquisition. To use a reference trigger, specify a buffer of finite size and a number of pretrigger samples (samples that occur before the reference trigger). The number of posttrigger samples (samples that occur after the reference trigger) desired is the buffer size minus the number of pretrigger samples.

Once the acquisition begins, the cDAQ chassis writes samples to the buffer. After the cDAQ chassis captures the specified number of pretrigger samples, the cDAQ chassis begins to look for the reference trigger condition. If the reference trigger condition occurs before the cDAQ chassis captures the specified number of pretrigger samples, the chassis ignores the condition.

If the buffer becomes full, the cDAQ chassis continuously discards the oldest samples in the buffer to make space for the next sample. This data can be accessed (with some limitations) before the cDAQ chassis discards it. Refer to the KnowledgeBase document, *Can a Pretriggered Acquisition be Continuous?*, for more information. To access this KnowledgeBase, go to `ni.com/info` and enter the Info Code `rdcanq`.

When the reference trigger occurs, the cDAQ chassis continues to write samples to the buffer until the buffer contains the number of posttrigger samples desired. Figure 2-3 shows the final buffer.

Figure 2-3. Reference Trigger Final Buffer

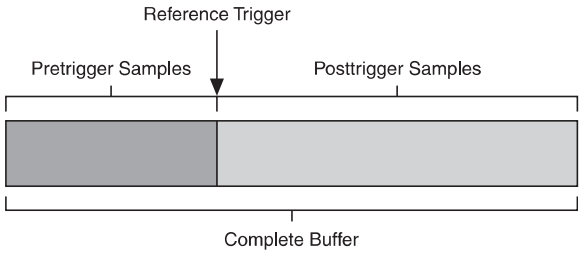

Using a Digital Source

To use Reference Trigger with a digital source, specify a source and a rising or falling edge. Either PFI or one of several internal signals on the cDAQ chassis can provide the source. Refer to the *Device Routing in MAX* topic in the *NI-DAQmx Help* or the *LabVIEW Help* for more information.

Using an Analog Source

Some C Series modules can generate a trigger based on an analog signal. In NI-DAQmx, this is called the Analog Comparison Event.

When you use an analog trigger source, the acquisition stops on the first rising or falling edge of the Analog Comparison Event signal, depending on the trigger properties.

Note Depending on the C Series module capabilities, you may need two modules to utilize analog triggering.

Routing the Reference Trigger Signal to an Output Terminal

You can route ReferenceTrigger to any output PFI terminal. Reference Trigger is active high by default.

AI Pause Trigger Signal

You can use the Pause Trigger to pause and resume a measurement acquisition. The internal sample clock pauses while the external trigger signal is active and resumes when the signal is inactive. You can program the active level of the pause trigger to be high or low.

Using a Digital Source

To use the Pause Trigger, specify a source and a polarity. The source can be either from PFI or one of several other internal signals on your cDAQ chassis. Refer to the *Device Routing in MAX* topic in the *NI-DAQmx Help* or the *LabVIEW Help* for more information.

Using an Analog Source

Some C Series modules can generate a trigger based on an analog signal. In NI-DAQmx, this is called the Analog Comparison Event.

When you use an analog trigger source, the internal sample clock pauses when the Analog Comparison Event signal is low and resumes when the signal goes high (or vice versa).

Note Depending on the C Series module capabilities, you may need two modules to utilize analog triggering.

Note Pause triggers are only sensitive to the level of the source, not the edge.

Getting Started with AI Applications in Software

You can use the cDAQ chassis in the following analog input applications:

- Single-point acquisition
- Finite acquisition
- Continuous acquisition

For more information about programming analog input applications and triggers in software, refer to the *NI-DAQmx Help* or the *LabVIEW Help* for more information.

3

Analog Output

To generate analog output, insert an analog output C Series module in any slot on the cDAQ chassis. The generation specifications, such as the number of channels, channel configuration, update rate, and output range, are determined by the type of C Series module used. For more information, refer to the documentation included with your C Series module(s).

On a single analog output C Series module, you can assign any number of channels to either a hardware-timed task or a software-timed (single-point) task. However, you cannot assign some channels to a hardware-timed task and other channels (on the same module) to a software-timed task.

Any hardware-timed task or software-timed task can have channels from multiple modules in the same chassis.

Analog Output Data Generation Methods

When performing an analog output operation, you either can perform software-timed or hardware-timed generations. Hardware-timed generations must be buffered.

Software-Timed Generations

With a software-timed generation, software controls the rate at which data is generated. Software sends a separate command to the hardware to initiate each DAC conversion. In NI-DAQmx, software-timed generations are referred to as on-demand timing. Software-timed generations are also referred to as immediate or static operations. They are typically used for writing out a single value, such as a constant DC voltage.

The following considerations apply to software-timed generations:

- If any AO channel on a module is used in a hardware-timed (waveform) task, no channels on that module can be used in a software-timed task
- You can configure software-timed generations to simultaneously update
- Only one simultaneous update task can run at a time
- A hardware-timed AO task and a simultaneous update AO task cannot run at the same time

Hardware-Timed Generations

With a hardware-timed generation, a digital hardware signal controls the rate of the generation. This signal can be generated internally on the chassis or provided externally.

Hardware-timed generations have several advantages over software-timed acquisitions:

- The time between samples can be much shorter
- The timing between samples is deterministic
- Hardware-timed acquisitions can use hardware triggering

Hardware-timed AO operations on the cDAQ chassis must be buffered.

Buffered Analog Output

A buffer is a temporary storage in computer memory for generated samples. In a buffered generation, data is moved from a host buffer to the cDAQ chassis onboard FIFO before it is written to the C Series modules.

One property of buffered operations is sample mode. The sample mode can be either finite or continuous:

- **Finite**—Finite sample mode generation refers to the generation of a specific, predetermined number of data samples. After the specified number of samples is written out, the generation stops.
- **Continuous**—Continuous generation refers to the generation of an unspecified number of samples. Instead of generating a set number of data samples and stopping, a continuous generation continues until you stop the operation. There are three different continuous generation modes that control how the data is written. These modes are regeneration, onboard regeneration, and non-regeneration:
  - In regeneration mode, you define a buffer in host memory. The data from the buffer is continually downloaded to the FIFO to be written out. New data can be written to the host buffer at any time without disrupting the output. There is no limitation on the number of waveform channels supported by regeneration mode.
  - With onboard regeneration, the entire buffer is downloaded to the FIFO and regenerated from there. After the data is downloaded, new data cannot be written to the FIFO. To use onboard regeneration, the entire buffer must fit within the FIFO size. The advantage of using onboard regeneration is that it does not require communication with the main host memory once the operation is started, which prevents problems that may occur due to excessive bus traffic or operating system latency. There is a limit of 16 waveform channels for onboard regeneration.
  - With non-regeneration, old data is not repeated. New data must continually be written to the buffer. If the program does not write new data to the buffer at a fast enough rate to keep up with the generation, the buffer underflows and causes an error. There is no limitation on the number of waveform channels supported by non-regeneration.

Analog Output Triggering Signals

Analog output supports two different triggering actions: AO Start Trigger and AO Pause Trigger.

An analog or digital trigger can initiate these actions. Up to two C Series parallel digital input modules can be used in any chassis slot to supply a digital trigger. An analog trigger can be supplied by some C Series analog modules.

Refer to the *AO Start Trigger Signal* and *AO Pause Trigger Signal* sections for more information about the analog output trigger signals.

Analog Output Timing Signals

The cDAQ chassis features the following AO (waveform generation) timing signals:

- *AO Sample Clock Signal**
- *AO Sample Clock Timebase Signal*
- *AO Start Trigger Signal**
- *AO Pause Trigger Signal**

Signals with an * support digital filtering. Refer to the *PFI Filters* section of Chapter 4, *Digital Input/Output and PFI*, for more information.

AO Sample Clock Signal

The AO sample clock (ao/SampleClock) signals when all the analog output channels in the task update. AO Sample Clock can be generated from external or internal sources as shown in Figure 3-1.

Figure 3-1. Analog Output Timing Options

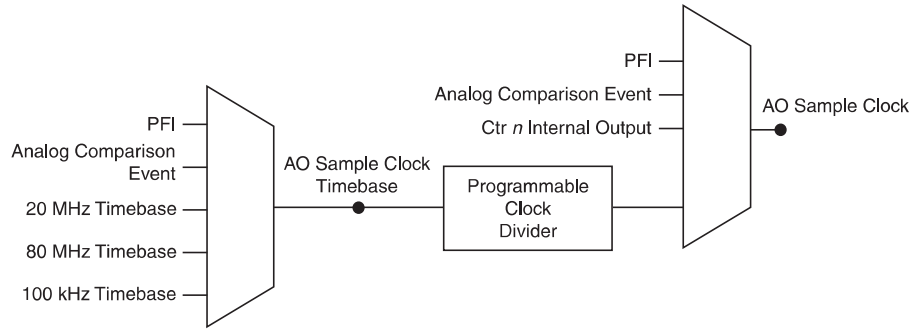

Routing AO Sample Clock to an Output Terminal

You can route AO Sample Clock to any output PFI terminal. AO Sample Clock is active high by default.

AO Sample Clock Timebase Signal

The AO Sample Clock Timebase (ao/SampleClockTimebase) signal is divided down to provide a source for AO Sample Clock. AO Sample Clock Timebase can be generated from external or internal sources, and is not available as an output from the chassis.

AO Start Trigger Signal

Use the AO Start Trigger (ao/StartTrigger) signal to initiate a waveform generation. If you do not use triggers, you can begin a generation with a software command. If you are using an internal sample clock, you can specify a delay from the start trigger to the first sample. For more information, refer to the *NI-DAQmx Help*.

Using a Digital Source

To use AO Start Trigger, specify a source and a rising or falling edge. The source can be one of the following signals:

- A pulse initiated by host software
- Any PFI terminal
- AI Reference Trigger
- AI Start Trigger

The source also can be one of several internal signals on the cDAQ chassis. Refer to the *Device Routing in MAX* topic in the *NI-DAQmx Help* or the *LabVIEW Help* for more information.

You also can specify whether the waveform generation begins on the rising edge or falling edge of AO Start Trigger.

Using an Analog Source

Some C Series modules can generate a trigger based on an analog signal. In NI-DAQmx, this is called the Analog Comparison Event, depending on the trigger properties.

When you use an analog trigger source, the waveform generation begins on the first rising or falling edge of the Analog Comparison Event signal, depending on the trigger properties. The analog trigger circuit must be configured by a simultaneously running analog input task.

Note Depending on the C Series module capabilities, you may need two modules to utilize analog triggering.

Routing AO Start Trigger Signal to an Output Terminal

You can route AO Start Trigger to any output PFI terminal. The output is an active high pulse.

AO Pause Trigger Signal

Use the AO Pause Trigger signal (ao/PauseTrigger) to mask off samples in a DAQ sequence. When AO Pause Trigger is active, no samples occur, but AO Pause Trigger does not stop a sample that is in progress. The pause does not take effect until the beginning of the next sample.

When you generate analog output signals, the generation pauses as soon as the pause trigger is asserted. If the source of the sample clock is the onboard clock, the generation resumes as soon as the pause trigger is deasserted, as shown in Figure 3-2.

Figure 3-2. AO Pause Trigger with the Onboard Clock Source

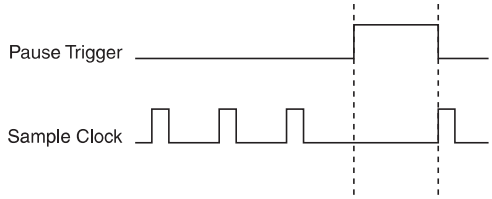

If you are using any signal other than the onboard clock as the source of the sample clock, the generation resumes as soon as the pause trigger is deasserted and another edge of the sample clock is received, as shown in Figure 3-3.

Figure 3-3. AO Pause Trigger with Other Signal Source

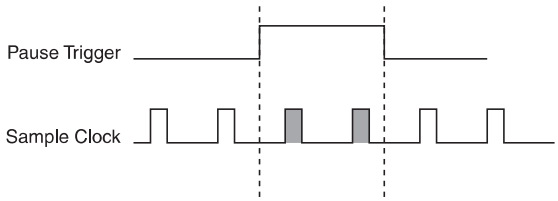

Using a Digital Source

To use AO Pause Trigger, specify a source and a polarity. The source can be a PFI signal or one of several other internal signals on the cDAQ chassis.

You also can specify whether the samples are paused when AO Pause Trigger is at a logic high or low level. Refer to the *Device Routing in MAX* topic in the *NI-DAQmx Help* or the *LabVIEW Help* for more information.

Using an Analog Source

Some C Series modules can generate a trigger based on an analog signal. In NI-DAQmx, this is called the Analog Comparison Event, depending on the trigger properties.

When you use an analog trigger source, the samples are paused when the Analog Comparison Event signal is at a high or low level, depending on the trigger properties. The analog trigger circuit must be configured by a simultaneously running analog input task.

Note Depending on the C Series module capabilities, you may need two modules to utilize analog triggering.

Minimizing Glitches on the Output Signal

When you use a DAC to generate a waveform, you may observe glitches on the output signal. These glitches are normal; when a DAC switches from one voltage to another, it produces glitches due to released charges. The largest glitches occur when the most significant bit of the DAC code changes. You can build a lowpass deglitching filter to remove some of these glitches, depending on the frequency and nature of the output signal. Go to ni.com/support for more information about minimizing glitches.

Getting Started with AO Applications in Software

You can use the cDAQ chassis in the following analog output applications:

- Single-point (on-demand) generation
- Finite generation
- Continuous generation
- Waveform generation

For more information about programming analog output applications and triggers in software, refer the *LabVIEW Help or* to the *NI-DAQmx Help*.

4

Digital Input/Output and PFI

This chapter describes the digital input/output (DIO) and Programmable Function Interface (PFI) functionality available on the cDAQ chassis. Refer to the *Digital Input/Output* and *PFI* sections.

Digital Input/Output

To use digital I/O, insert a digital C Series module into any slot on the cDAQ chassis. The specifications, such as number of lines, logic levels, update rate, and line direction, are determined by the type of C Series module used. For more information, refer to the documentation included with your C Series module(s).

Serial DIO versus Parallel DIO Modules

Serial digital modules have more than eight lines of digital input/output. They can be used in any chassis slot and can perform the following tasks:

- Software-timed and hardware-timed digital input/output tasks

Parallel digital modules can be used in any chassis slot and can perform the following tasks:

- Software-timed and hardware-timed digital input/output tasks
- Counter/timer tasks (can be used in up to two slots)
- Accessing PFI signal tasks (can be used in up to two slots)
- Filter digital input signals

Software-timed and hardware-timed digital input/output tasks have the following restrictions:

- You cannot use parallel and serial modules together on the same hardware-timed task.
- You cannot use serial modules for triggering.
- You cannot do both static and timed tasks at the same time on a single serial module.
- You can only do hardware timing in one direction at a time on a serial bidirectional module.

To determine the capability of digital modules supported by the cDAQ chassis, go to `ni.com/info` and enter the Info Code `rdcdaq`.

Static DIO

Each of the DIO lines can be used as a static DI or DO line. You can use static DIO lines to monitor or control digital signals on some C Series modules. Each DIO line can be individually configured as a digital input (DI) or digital output (DO), if the C Series module being used allows such configuration.

All samples of static DI lines and updates of static DO lines are software-timed.

Digital Input

You can acquire digital waveforms using either parallel or serial digital modules. The DI waveform acquisition FIFO stores the digital samples. The cDAQ chassis samples the DIO lines on each rising or falling edge of the DI Sample Clock signal.

Digital Input Triggering Signals

A trigger is a signal that causes an action, such as starting or stopping the acquisition of data. When you configure a trigger, you must decide how you want to produce the trigger and the action you want the trigger to cause. The cDAQ chassis supports three types of digital triggering: internal software digital triggering, external digital triggering, and internal digital triggering.

Three triggers are available: Start Trigger, Reference Trigger, and Pause Trigger. An analog or digital trigger can initiate these three trigger actions. Up to two C Series parallel digital input modules can be used in any chassis slot to supply a digital trigger. To find your module triggering options, refer to the documentation included with your C Series modules. For more information about using analog modules for triggering, refer to the *Analog Input Triggering Signals* section of Chapter 2, *Analog Input*, and the *Analog Output Triggering Signals* section of Chapter 3, *Analog Output*.

Refer to the *DI Start Trigger Signal*, *DI Reference Trigger Signal*, and *DI Pause Trigger Signal* sections for more information about the digital input trigger signals.

Digital Input Timing Signals

The cDAQ chassis features the following digital input timing signals:

- *DI Sample Clock Signal**
- *DI Sample Clock Timebase Signal*
- *DI Start Trigger Signal**
- *DI Reference Trigger Signal**
- *DI Pause Trigger Signal**

Signals with an * support digital filtering. Refer to the *PFI Filters* section for more information.

DI Sample Clock Signal

Use the DI Sample Clock (di/SampleClock) signal to sample digital I/O on any slot using parallel digital modules, and store the result in the DI waveform acquisition FIFO. If the cDAQ chassis receives a DI Sample Clock signal when the FIFO is full, it reports an overflow error to the host software.

A sample consists of one reading from each channel in the DI task. DI Sample Clock signals the start of a sample of all digital input channels in the task. DI Sample Clock can be generated from external or internal sources as shown in Figure 4-1.

Figure 4-1. DI Sample Clock Timing Options

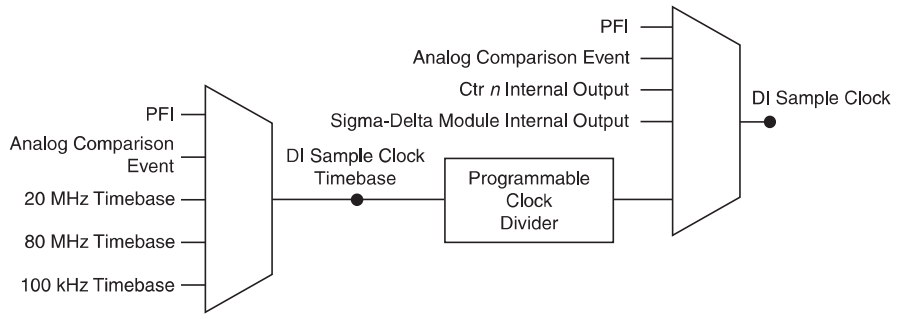

Routing DI Sample Clock to an Output Terminal

You can route DI Sample Clock to any output PFI terminal.

DI Sample Clock Timebase Signal

The DI Sample Clock Timebase (di/SampleClockTimebase) signal is divided down to provide a source for DI Sample Clock. DI Sample Clock Timebase can be generated from external or internal sources. DI Sample Clock Timebase is not available as an output from the chassis.

Using an Internal Source

To use DI Sample Clock with an internal source, specify the signal source and the polarity of the signal. Use the following signals as the source:

- AI Sample Clock
- AO Sample Clock
- Counter *n* Internal Output
- Frequency Output
- DI Change Detection Output

Several other internal signals can be routed to DI Sample Clock. Refer to the *Device Routing in MAX* topic in the *NI-DAQmx Help* or the *LabVIEW Help* for more information.

Using an External Source

You can route the following signals as DI Sample Clock:

- Any PFI terminal
- Analog Comparison Event (an analog trigger)

You can sample data on the rising or falling edge of DI Sample Clock.

Routing DI Sample Clock to an Output Terminal

You can route DI Sample Clock to any output PFI terminal. The PFI circuitry inverts the polarity of DI Sample Clock before driving the PFI terminal.

DI Start Trigger Signal

Use the DI Start Trigger (di/StartTrigger) signal to begin a measurement acquisition. A measurement acquisition consists of one or more samples. If you do not use triggers, begin a measurement with a software command. Once the acquisition begins, configure the acquisition to stop in one of the following ways:

- When a certain number of points has been sampled (in finite mode)
- After a hardware reference trigger (in finite mode)
- With a software command (in continuous mode)

An acquisition that uses a start trigger (but not a reference trigger) is sometimes referred to as a posttriggered acquisition. That is, samples are measured only after the trigger.

When you are using an internal sample clock, you can specify a delay from the start trigger to the first sample.

Using a Digital Source

To use DI Start Trigger with a digital source, specify a source and a rising or falling edge. Use the following signals as the source:

- Any PFI terminal
- Counter *n* Internal Output

The source also can be one of several other internal signals on the cDAQ chassis. Refer to the *Device Routing in MAX* topic in the *NI-DAQmx Help* or the *LabVIEW Help* for more information.

Using an Analog Source

Some C Series modules can generate a trigger based on an analog signal. In NI-DAQmx, this is called the Analog Comparison Event. When you use an analog trigger source for DI Start Trigger, the acquisition begins on the first rising edge of the Analog Comparison Event signal.



Note Depending on the C Series module capabilities, you may need two modules to utilize analog triggering.

Routing DI Start Trigger to an Output Terminal

You can route DI Start Trigger to any output PFI terminal. The output is an active high pulse.

DI Reference Trigger Signal

Use a reference trigger (di/ReferenceTrigger) signal to stop a measurement acquisition. To use a reference trigger, specify a buffer of finite size and a number of pretrigger samples (samples that occur before the reference trigger). The number of posttrigger samples (samples that occur after the reference trigger) desired is the buffer size minus the number of pretrigger samples.

Once the acquisition begins, the cDAQ chassis writes samples to the buffer. After the cDAQ chassis captures the specified number of pretrigger samples, the chassis begins to look for the reference trigger condition. If the reference trigger condition occurs before the cDAQ chassis captures the specified number of pretrigger samples, the chassis ignores the condition.

If the buffer becomes full, the cDAQ chassis continuously discards the oldest samples in the buffer to make space for the next sample. This data can be accessed (with some limitations) before the cDAQ chassis discards it. Refer to the KnowledgeBase document, *Can a Pretriggered Acquisition be Continuous?*, for more information. To access this KnowledgeBase, go to `ni.com/info` and enter the Info Code `rdcanq`.

When the reference trigger occurs, the cDAQ chassis continues to write samples to the buffer until the buffer contains the number of posttrigger samples desired. Figure 4-2 shows the final buffer.

Figure 4-2. Reference Trigger Final Buffer

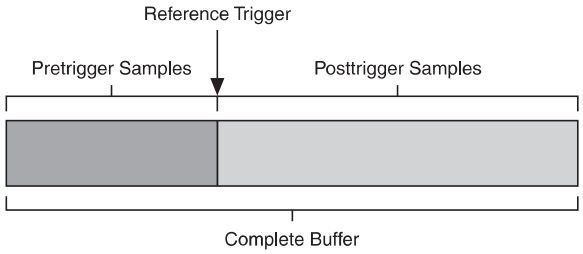

Using a Digital Source

To use DI Reference Trigger with a digital source, specify a source and a rising or falling edge. Either PFI or one of several internal signals on the cDAQ chassis can provide the source. Refer to the *Device Routing in MAX* topic in the *NI-DAQmx Help* or the *LabVIEW Help* for more information.

Using an Analog Source

Some C Series modules can generate a trigger based on an analog signal. In NI-DAQmx, this is called the Analog Comparison Event.

When you use an analog trigger source, the acquisition stops on the first rising or falling edge of the Analog Comparison Event signal, depending on the trigger properties.

Note Depending on the C Series module capabilities, you may need two modules to utilize analog triggering.

Routing DI Reference Trigger Signal to an Output Terminal

You can route DI Reference Trigger to any output PFI terminal. Reference Trigger is active high by default.

DI Pause Trigger Signal

You can use the DI PauseTrigger (di/PauseTrigger) signal to pause and resume a measurement acquisition. The internal sample clock pauses while the external trigger signal is active and resumes when the signal is inactive. You can program the active level of the pause trigger to be high or low.

Using a Digital Source

To use di/PauseTrigger, specify a source and a polarity. The source can be either from PFI or one of several other internal signals on your cDAQ chassis. Refer to the *Device Routing in MAX* topic in the *NI-DAQmx Help* or the *LabVIEW Help* for more information.

Using an Analog Source

Some C Series modules can generate a trigger based on an analog signal. In NI-DAQmx, this is called the Analog Comparison Event.

When you use an analog trigger source, the internal sample clock pauses when the Analog Comparison Event signal is low and resumes when the signal goes high (or vice versa).

Note Depending on the C Series module capabilities, you may need two modules to utilize analog triggering.

Note Pause triggers are only sensitive to the level of the source, not the edge.

Digital Input Filters

When performing a hardware timed task, you can enable a programmable debouncing filter on the digital input lines of a parallel DIO module. All lines on a module must share the same filter configuration. When the filter is enabled, the chassis samples the inputs with a user-configured Filter Clock derived from the chassis timebase. This is used to determine whether a pulse is propagated to the rest of the system. However, the filter also introduces jitter onto the input signal.

In NI-DAQmx, the filter is programmed by setting the minimum pulse width, *Tp*[1], that will pass the filter, and is selectable in 25 ns increments. The appropriate Filter Clock is selected by the driver. Pulses of length less than 1/2 *Tp* will be rejected, and the filtering behavior of lengths between 1/2 *Tp* and 1 *Tp* are not defined because they depend on the phase of the Filter Clock relative to the input signal.

Figure 4-3 shows an example of low-to-high transitions of the input signal. High-to-low transitions work similarly.

Assume that an input terminal has been low for a long time. The input terminal then changes from low to high, but glitches several times. When the filter clock has sampled the signal high on consecutive rising edges, the low-to-high transition is propagated to the rest of the circuit.

Figure 4-3. Digital Input Filter Example

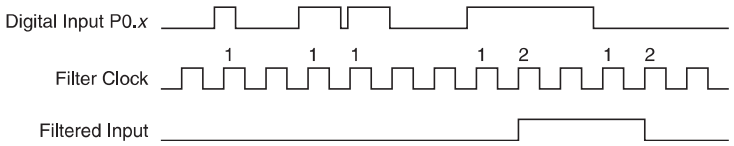

Getting Started with DI Applications in Software

You can use the cDAQ chassis in the following digital input applications:

- Single-point acquisition
- Finite acquisition
- Continuous acquisition

For more information about programming digital input applications and triggers in software, refer to the *NI-DAQmx Help* or the *LabVIEW Help* for more information.

Change Detection Event

The Change Detection Event is the signal generated when a change on the rising or falling edge lines is detected by the change detection task.

Routing Change Detection Event to an Output Terminal

You can route ChangeDetectionEvent to any output PFI terminal.

Change Detection Acquisition

You can configure lines on parallel digital modules to detect rising or falling edges. When one or more of these lines sees the edge specified for that line, the cDAQ chassis samples all the lines in the task. The rising and falling edge lines do not necessarily have to be in the task.

[1] *Tp* is a nominal value; the accuracy of the chassis timebase and I/O distortion will affect this value.

Change detection acquisitions can be buffered or nonbuffered:

- **Nonbuffered Change Detection Acquisition**—In a nonbuffered acquisition, data is transferred from the cDAQ chassis directly to a PC buffer.
- **Buffered Change Detection Acquisition**—A buffer is a temporary storage in computer memory for acquired samples. In a buffered acquisition, data is stored in the cDAQ chassis onboard FIFO then transferred to a PC buffer. Buffered acquisitions typically allow for much faster transfer rates than nonbuffered acquisitions because data accumulates and is transferred in blocks, rather than one sample at a time.

Digital Output

To generate digital output, insert a digital output C Series module in any slot on the cDAQ chassis. The generation specifications, such as the number of channels, channel configuration, update rate, and output range, are determined by the type of C Series module used. For more information, refer to the documentation included with your C Series module(s).

With parallel digital output modules (formerly known as hardware-timed modules), you can do multiple software-timed tasks on a single module, as well as mix hardware-timed and software-timed digital output tasks on a single module. On serial digital output modules (formerly known as static digital output modules), you cannot mix hardware-timed and software-timed tasks, but you can run multiple software-timed tasks.

You may have a hardware-timed task or a software-timed task include channels from multiple modules, but a hardware-timed task may not include a mix of channels from both parallel and serial modules.

Digital Output Data Generation Methods

When performing a digital output operation, you either can perform software-timed or hardware-timed generations. Hardware-timed generations must be buffered.

Software-Timed Generations

With a software-timed generation, software controls the rate at which data is generated. Software sends a separate command to the hardware to initiate each digital generation. In NI-DAQmx, software-timed generations are referred to as on-demand timing. Software-timed generations are also referred to as immediate or static operations. They are typically used for writing out a single value.

For software-timed generations, if any DO channel on a serial digital module is used in a hardware-timed task, no channels on that module can be used in a software-timed task.

Hardware-Timed Generations

With a hardware-timed generation, a digital hardware signal controls the rate of the generation. This signal can be generated internally on the chassis or provided externally.

Hardware-timed generations have several advantages over software-timed acquisitions:

- The time between samples can be much shorter.
- The timing between samples is deterministic.
- Hardware-timed acquisitions can use hardware triggering.

Hardware-timed DO operations on the cDAQ chassis must be buffered.

Buffered Digital Output

A buffer is a temporary storage in computer memory for generated samples. In a buffered generation, data is moved from a host buffer to the cDAQ chassis onboard FIFO before it is written to the C Series module(s).

One property of buffered I/O operations is sample mode. The sample mode can be either finite or continuous:

- **Finite**—Finite sample mode generation refers to the generation of a specific, predetermined number of data samples. After the specified number of samples is written out, the generation stops.
- **Continuous**—Continuous generation refers to the generation of an unspecified number of samples. Instead of generating a set number of data samples and stopping, a continuous generation continues until you stop the operation. There are three different continuous generation modes that control how the data is written. These modes are regeneration, onboard regeneration, and non-regeneration:
  - In regeneration mode, you define a buffer in host memory. The data from the buffer is continually downloaded to the FIFO to be written out. New data can be written to the host buffer at any time without disrupting the output.
  - With onboard regeneration, the entire buffer is downloaded to the FIFO and regenerated from there. After the data is downloaded, new data cannot be written to the FIFO. To use onboard regeneration, the entire buffer must fit within the FIFO size. The advantage of using onboard regeneration is that it does not require communication with the main host memory once the operation is started, which prevents problems that may occur due to excessive bus traffic or operating system latency.



Note **(cDAQ-9178)** Install parallel DO modules in slots 1 through 4 to maximize accessible FIFO size because using a module in slots 5 through 8 will reduce the accessible FIFO size.

  - With non-regeneration, old data is not repeated. New data must continually be written to the buffer. If the program does not write new data to the buffer at a fast enough rate to keep up with the generation, the buffer underflows and causes an error.

Digital Output Triggering Signals

Digital output supports two different triggering actions: DO Start Trigger and DO Pause Trigger.

A digital or analog trigger can initiate these actions. Any PFI terminal can supply a digital trigger, and some C Series analog modules can supply an analog trigger. For more information, refer to the documentation included with your C Series module(s).

Refer to the *DO Start Trigger Signal* and *DO Pause Trigger Signal* sections for more information about the digital output trigger signals.

Digital Output Timing Signals

The cDAQ chassis features the following DO timing signals:

- *DO Sample Clock Signal**
- *DO Sample Clock Timebase Signal*
- *DO Start Trigger Signal**
- *DO Pause Trigger Signal**

Signals with an * support digital filtering. Refer to the *PFI Filters* section for more information.

DO Sample Clock Signal

The DO Sample Clock (do/SampleClock) signals when all the digital output channels in the task update. DO Sample Clock can be generated from external or internal sources as shown in Figure 4-4.

Figure 4-4. Digital Output Timing Options

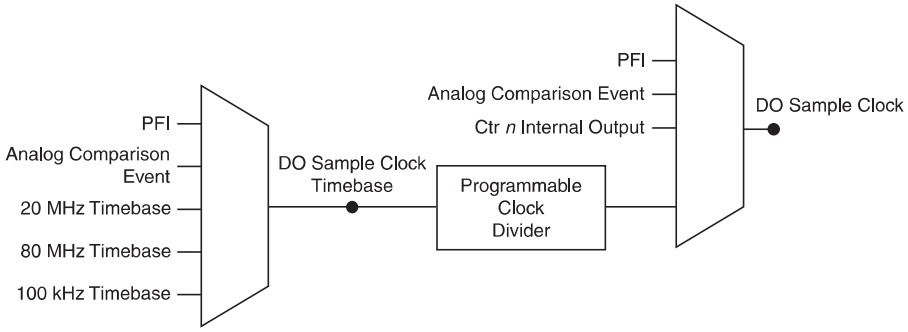

Routing DO Sample Clock to an Output Terminal

You can route DO Sample Clock to any output PFI terminal. DO Sample Clock is active high by default.

DO Sample Clock Timebase Signal

The DO Sample Clock Timebase (do/SampleClockTimebase) signal is divided down to provide a source for DO Sample Clock. DO Sample Clock Timebase can be generated from external or internal sources, and is not available as an output from the chassis.

DO Start Trigger Signal

Use the DO Start Trigger (do/StartTrigger) signal to initiate a waveform generation. If you do not use triggers, you can begin a generation with a software command. If you are using an internal sample clock, you can specify a delay from the start trigger to the first sample. For more information, refer to the *NI-DAQmx Help*.

Using a Digital Source

To use do/StartTrigger, specify a source and a rising or falling edge. The source can be one of the following signals:

- A pulse initiated by host software
- Any PFI terminal
- AI Reference Trigger
- AI Start Trigger

The source also can be one of several internal signals on the cDAQ chassis. Refer to the *Device Routing in MAX* topic in the *NI-DAQmx Help* or the *LabVIEW Help* for more information.

You also can specify whether the waveform generation begins on the rising edge or falling edge of do/StartTrigger.

Using an Analog Source

Some C Series modules can generate a trigger based on an analog signal. In NI-DAQmx, this is called the Analog Comparison Event, depending on the trigger properties.

When you use an analog trigger source, the waveform generation begins on the first rising or falling edge of the Analog Comparison Event signal, depending on the trigger properties. The analog trigger circuit must be configured by a simultaneously running analog input task.

Note Depending on the C Series module capabilities, you may need two modules to utilize analog triggering.

Routing DO Start Trigger Signal to an Output Terminal

You can route do/StartTrigger to any output PFI terminal. The output is an active high pulse.

DO Pause Trigger Signal

Use the DO Pause Trigger signal (do/PauseTrigger) to mask off samples in a DAQ sequence. When DO Pause Trigger is active, no samples occur, but DO Pause Trigger does not stop a sample that is in progress. The pause does not take effect until the beginning of the next sample.

When you generate digital output signals, the generation pauses as soon as the pause trigger is asserted. If the source of the sample clock is the onboard clock, the generation resumes as soon as the pause trigger is deasserted, as shown in Figure 4-5.

Figure 4-5. DO Pause Trigger with the Onboard Clock Source

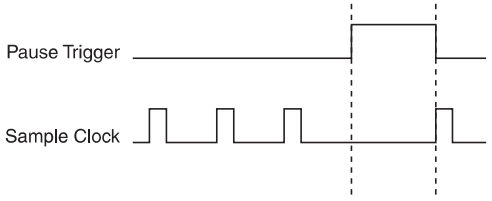

If you are using any signal other than the onboard clock as the source of the sample clock, the generation resumes as soon as the pause trigger is deasserted and another edge of the sample clock is received, as shown in Figure 4-6.

Figure 4-6. DO Pause Trigger with Other Signal Source

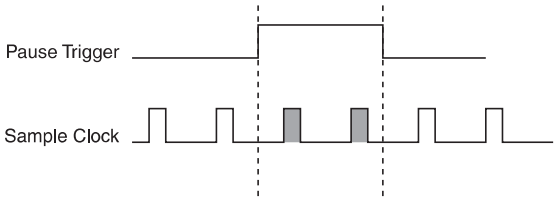

Using a Digital Source

To use DO Pause Trigger, specify a source and a polarity. The source can be a PFI signal or one of several other internal signals on the cDAQ chassis.

You also can specify whether the samples are paused when DO Pause Trigger is at a logic high or low level. Refer to the *Device Routing in MAX* topic in the *NI-DAQmx Help* or the *LabVIEW Help* for more information.

Using an Analog Source

Some C Series modules can generate a trigger based on an analog signal. In NI-DAQmx, this is called the Analog Comparison Event, depending on the trigger properties.

When you use an analog trigger source, the samples are paused when the Analog Comparison Event signal is at a high or low level, depending on the trigger properties. The analog trigger circuit must be configured by a simultaneously running analog input task.

Note Depending on the C Series module capabilities, you may need two modules to utilize analog triggering.

Getting Started with DO Applications in Software

You can use the cDAQ chassis in the following digital output applications:

- Single-point (on-demand) generation
- Finite Generation
- Continuous Generation

For more information about programming digital output applications and triggers in software, refer the *LabVIEW Help or* to the *NI-DAQmx Help*.

Digital Input/Output Configuration for NI 9401

When you change the configuration of lines on a NI 9401 digital module between input and output, NI-DAQmx temporarily reserves all of the lines on the module for communication to send the module a line configuration command. For this reason, you must reserve the task in advance through the DAQmx Control Task before any task has started. If another task or route is actively using the module, to avoid interfering with the other task, NI-DAQmx generates an error instead of sending the line configuration command. During the line configuration command, the output lines are maintained without glitching.

PFI

You can configure channels of a parallel digital module as Programmable Function Interface (PFI) terminals. The cDAQ-9178 chassis also provides two terminals for PFI. Up to two digital modules can be used to access PFI terminals in a single chassis.

You can configure each PFI individually as the following:

- Timing input signal for AI, AO, DI, DO, or counter/timer functions
- Timing output signal from AI, AO, DI, DO, or counter/timer functions

PFI Filters

You can enable a programmable debouncing filter on each PFI signal. When the filter is enabled, the chassis samples the inputs with a user-configured Filter Clock derived from the chassis timebase. This is used to determine whether a pulse is propagated to the rest of the circuit. However, the filter also introduces jitter onto the PFI signal.

The following is an example of low-to-high transitions of the input signal. High-to-low transitions work similarly.

Assume that an input terminal has been low for a long time. The input terminal then changes from low to high, but glitches several times. When the Filter Clock has sampled the signal high on *N* consecutive edges, the low-to-high transition is propagated to the rest of the circuit. The value of *N* depends on the filter setting, as shown in Table 4-1.

Table 4-1. Selectable PFI Filter Settings

Filter Setting	Filter Clock	Jitter	Min Pulse Width* to Pass	Max Pulse Width* to Not Pass
112.5 ns (short)	80 MHz	12.5 ns	112.5 ns	100 ns
6.4 µs (medium)	80 MHz	12.5 ns	6.4 µs	6.3875 µs
2.56 ms (high)	100 kHz	10 µs	2.56 ms	2.55 ms
Custom	User-configurable	1 Filter Clock period	T_{user}	T_{user} - (1 Filter Clock period)

* Pulse widths are nominal values; the accuracy of the chassis timebase and I/O distortion will affect these values.

On power up, the filters are disabled. Figure 4-7 shows an example of a low-to-high transition on an input that has a custom filter set to $N = 5$.

Figure 4-7. PFI Filter Example

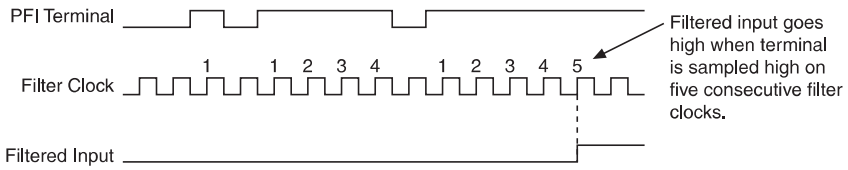

5

Counters

The cDAQ chassis has four general-purpose 32-bit counter/timers and one frequency generator. The general-purpose counter/timers can be used for many measurement and pulse generation applications. Figure 5-1 shows the cDAQ chassis Counter 0 and the frequency generator. All four counters on the cDAQ chassis are identical.

Figure 5-1. Counter 0 and Frequency Generator

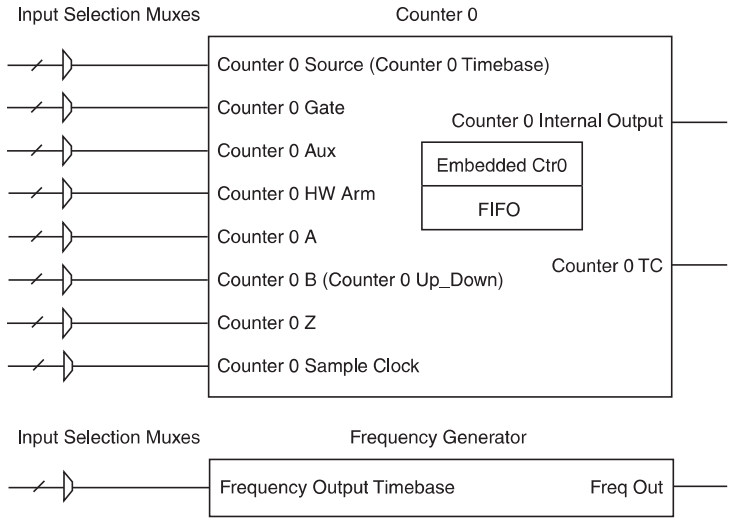

Counters have eight input signals, although in most applications only a few inputs are used.

For information about connecting counter signals, refer to the *Default Counter/Timer Routing* section.

Each counter has a FIFO that can be used for buffered acquisition and generation. Each counter also contains an embedded counter (Embedded Ctr*n*) for use in what are traditionally two-counter measurements and generations. The embedded counters cannot be programmed independent of the main counter; signals from the embedded counters are not routable.

Counter Timing Engine

Unlike analog input, analog output, digital input, and digital output, the cDAQ chassis counters do not have the ability to divide down a timebase to produce an internal counter sample clock.

For sample clocked operations, an external signal must be provided to supply a clock source. The source can be any of the following signals:

- AI Sample Clock
- AI Start Trigger
- AI Reference Trigger
- AO Sample Clock
- DI Sample Clock
- DI Start Trigger
- DO Sample Clock
- CTR *n* Internal Output
- Freq Out
- PFI
- Change Detection Event
- Analog Comparison Event

Not all timed counter operations require a sample clock. For example, a simple buffered pulse width measurement latches in data on each edge of a pulse. For this measurement, the measured signal determines when data is latched in. These operations are referred to as implicit timed operations. However, many of the same measurements can be clocked at an interval with a sample clock. These are referred to as sample clocked operations. Table 5-1 shows the different options for the different measurements.

Table 5-1. Counter Timing Measurements

Measurement	Implicit Timing Support	Sample Clocked Timing Support
Buffered Edge Count	No	Yes
Buffered Pulse Width	Yes	Yes
Buffered Pulse	Yes	Yes
Buffered Semi-Period	Yes	No
Buffered Frequency	Yes	Yes
Buffered Period	Yes	Yes
Buffered Position	No	Yes
Buffered Two-Signal Edge Separation	Yes	Yes

Counter Input Applications

The following sections list the various counter input applications available on the cDAQ chassis:

- *Counting Edges*
- *Pulse-Width Measurement*
- *Pulse Measurement*
- *Semi-Period Measurement*
- *Frequency Measurement*
- *Period Measurement*
- *Position Measurement*

Counting Edges

In edge counting applications, the counter counts edges on its Source after the counter is armed. You can configure the counter to count rising or falling edges on its Source input. You also can control the direction of counting (up or down), as described in the *Controlling the Direction of Counting* section. The counter values can be read on demand or with a sample clock.

Refer to the following sections for more information about edge counting options:

- *Single Point (On-Demand) Edge Counting*
- *Buffered (Sample Clock) Edge Counting*

Single Point (On-Demand) Edge Counting

With single point (on-demand) edge counting, the counter counts the number of edges on the Source input after the counter is armed. On-demand refers to the fact that software can read the counter contents at any time without disturbing the counting process. Figure 5-2 shows an example of single point edge counting.

Figure 5-2. Single Point (On-Demand) Edge Counting

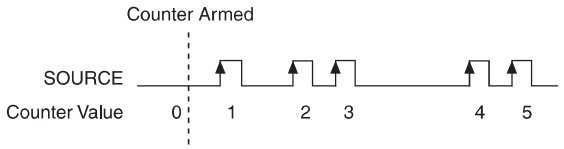

You also can use a pause trigger to pause (or gate) the counter. When the pause trigger is active, the counter ignores edges on its Source input. When the pause trigger is inactive, the counter counts edges normally.

You can route the pause trigger to the Gate input of the counter. You can configure the counter to pause counting when the pause trigger is high or when it is low. Figure 5-3 shows an example of on-demand edge counting with a pause trigger.

Figure 5-3. Single Point (On-Demand) Edge Counting with Pause Trigger

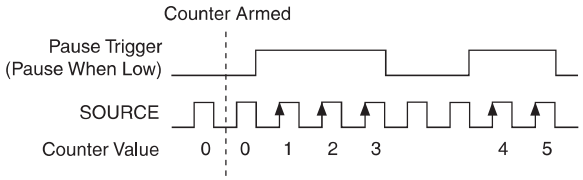

Buffered (Sample Clock) Edge Counting

With buffered edge counting (edge counting using a sample clock), the counter counts the number of edges on the Source input after the counter is armed. The value of the counter is sampled on each active edge of a sample clock and stored in the FIFO. The STC3 transfers the sampled values to host memory using a high-speed data stream.

The count values returned are the cumulative counts since the counter armed event. That is, the sample clock does not reset the counter. You can configure the counter to sample on the rising or falling edge of the sample clock.

Figure 5-4 shows an example of buffered edge counting. Notice that counting begins when the counter is armed, which occurs before the first active edge on Sample Clock.

Figure 5-4. Buffered (Sample Clock) Edge Counting

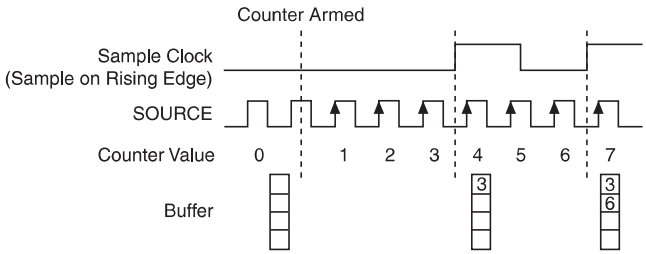

Controlling the Direction of Counting

In edge counting applications, the counter can count up or down. You can configure the counter to do the following:

- Always count up
- Always count down
- Count up when the Counter 0 B input is high; count down when it is low

For information about connecting counter signals, refer to the *Default Counter/Timer Routing* section.

Pulse-Width Measurement

In pulse-width measurements, the counter measures the width of a pulse on its Gate input signal. You can configure the counter to measure the width of high pulses or low pulses on the Gate signal.

You can route an internal or external periodic clock signal (with a known period) to the Source input of the counter. The counter counts the number of rising (or falling) edges on the Source signal while the pulse on the Gate signal is active.

You can calculate the pulse width by multiplying the period of the Source signal by the number of edges returned by the counter.

A pulse-width measurement will be accurate even if the counter is armed while a pulse train is in progress. If a counter is armed while the pulse is in the active state, it will wait for the next transition to the active state to begin the measurement.

Refer to the following sections for more information about cDAQ chassis pulse-width measurement options:

- *Single Pulse-Width Measurement*
- *Implicit Buffered Pulse-Width Measurement*
- *Sample Clocked Buffered Pulse-Width Measurement*

Single Pulse-Width Measurement

With single pulse-width measurement, the counter counts the number of edges on the Source input while the Gate input remains active. When the Gate input goes inactive, the counter stores the count in the FIFO and ignores other edges on the Gate and Source inputs. Software then reads the stored count.

Figure 5-5 shows an example of a single pulse-width measurement.

Figure 5-5. Single Pulse-Width Measurement

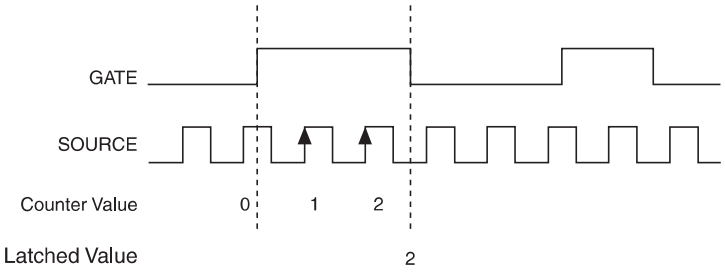

Implicit Buffered Pulse-Width Measurement

An implicit buffered pulse-width measurement is similar to single pulse-width measurement, but buffered pulse-width measurement takes measurements over multiple pulses.

The counter counts the number of edges on the Source input while the Gate input remains active. On each trailing edge of the Gate signal, the counter stores the count in the counter FIFO. The STC3 transfers the sampled values to host memory using a high-speed data stream.

Figure 5-6 shows an example of an implicit buffered pulse-width measurement.

Figure 5-6. Implicit Buffered Pulse-Width Measurement

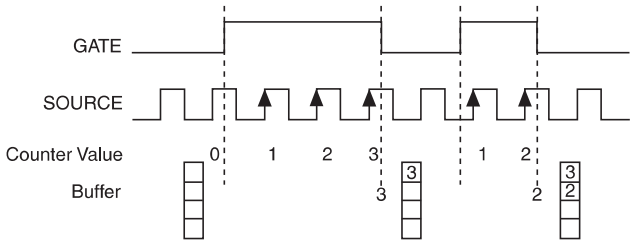

Sample Clocked Buffered Pulse-Width Measurement

A sample clocked buffered pulse-width measurement is similar to single pulse-width measurement, but buffered pulse-width measurement takes measurements over multiple pulses correlated to a sample clock.

The counter counts the number of edges on the Source input while the Gate input remains active. On each sample clock edge, the counter stores the count in the FIFO of the last pulse width to complete. The STC3 transfers the sampled values to host memory using a high-speed data stream.

Figure 5-7 shows an example of a sample clocked buffered pulse-width measurement.

Figure 5-7. Sample Clocked Buffered Pulse-Width Measurement

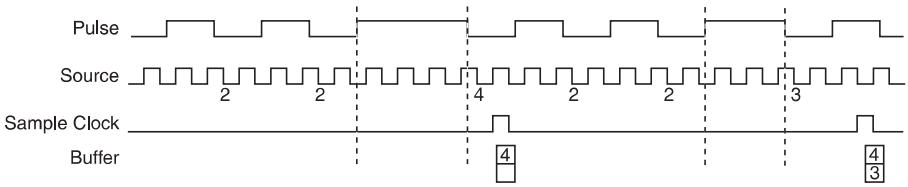

Note If a pulse does not occur between sample clocks, an overrun error occurs.

For information about connecting counter signals, refer to the *Default Counter/Timer Routing* section.

Pulse Measurement

In pulse measurements, the counter measures the high and low time of a pulse on its Gate input signal after the counter is armed. A pulse is defined in terms of its high and low time, high and low ticks or frequency and duty cycle. This is similar to the pulse-width measurement, except that the inactive pulse is measured as well.

You can route an internal or external periodic clock signal (with a known period) to the Source input of the counter. The counter counts the number of rising (or falling) edges occurring on the Source input between two edges of the Gate signal.

You can calculate the high and low time of the Gate input by multiplying the period of the Source signal by the number of edges returned by the counter.

Refer to the following sections for more information about cDAQ chassis pulse measurement options:

- *Single Pulse Measurement*
- *Implicit Buffered Pulse Measurement*
- *Sample Clocked Buffered Pulse Measurement*

Single Pulse Measurement

Single (on-demand) pulse measurement is equivalent to two single pulse-width measurements on the high (H) and low (L) ticks of a pulse, as shown in Figure 5-8.

Figure 5-8. Single (On-Demand) Pulse Measurement

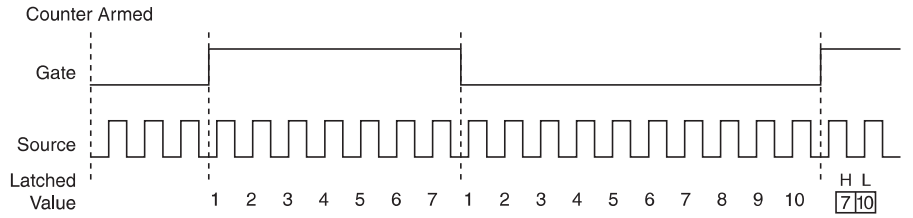

Implicit Buffered Pulse Measurement

In an implicit buffered pulse measurement, on each edge of the Gate signal, the counter stores the count in the FIFO. The STC3 transfers the sampled values to host memory using a high-speed data stream.

The counter begins counting when it is armed. The arm usually occurs between edges on the Gate input but the counting does not start until the desired edge. You can select whether to read the high pulse or low pulse first using the **StartingEdge** property in NI-DAQmx.

Figure 5-9 shows an example of an implicit buffered pulse measurement.

Figure 5-9. Implicit Buffered Pulse Measurement

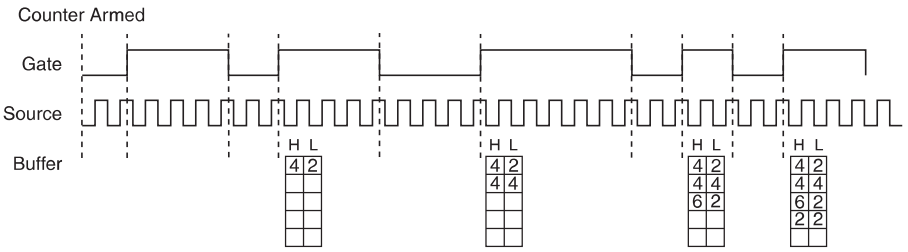

Sample Clocked Buffered Pulse Measurement

A sample clocked buffered pulse measurement is similar to single pulse measurement, but a buffered pulse measurement takes measurements over multiple pulses correlated to a sample clock.

The counter performs a pulse measurement on the Gate. On each sample clock edge, the counter stores the high and low ticks in the FIFO of the last pulse to complete. The STC3 transfers the sampled values to host memory using a high-speed data stream.

Figure 5-10 shows an example of a sample clocked buffered pulse measurement.

Figure 5-10. Sample Clocked Buffered Pulse Measurement

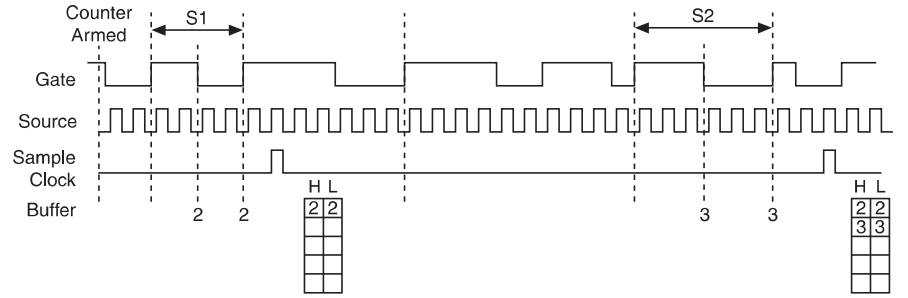

Note If a pulse does not occur between sample clocks, an overrun error occurs.

For information about connecting counter signals, refer to the *Default Counter/Timer Routing* section.

Semi-Period Measurement

In semi-period measurements, the counter measures a semi-period on its Gate input signal after the counter is armed. A semi-period is the time between any two consecutive edges on the Gate input.

You can route an internal or external periodic clock signal (with a known period) to the Source input of the counter. The counter counts the number of rising (or falling) edges occurring on the Source input between two edges of the Gate signal.

You can calculate the semi-period of the Gate input by multiplying the period of the Source signal by the number of edges returned by the counter.

Refer to the following sections for more information about semi-period measurement options:

- *Single Semi-Period Measurement*
- *Implicit Buffered Semi-Period Measurement*

Refer to the *Pulse versus Semi-Period Measurements* section for information about the differences between semi-period measurement and pulse measurement.

Single Semi-Period Measurement

Single semi-period measurement is equivalent to single pulse-width measurement.

Implicit Buffered Semi-Period Measurement

In implicit buffered semi-period measurements, on each edge of the Gate signal, the counter stores the count in the FIFO. The STC3 transfers the sampled values to host memory using a high-speed data stream.

The counter begins counting when it is armed. The arm usually occurs between edges on the Gate input. You can select whether to read the first active low or active high semi period using the **CI.SemiPeriod.StartingEdge** property in NI-DAQmx.

Figure 5-11 shows an example of an implicit buffered semi-period measurement.

Figure 5-11. Implicit Buffered Semi-Period Measurement

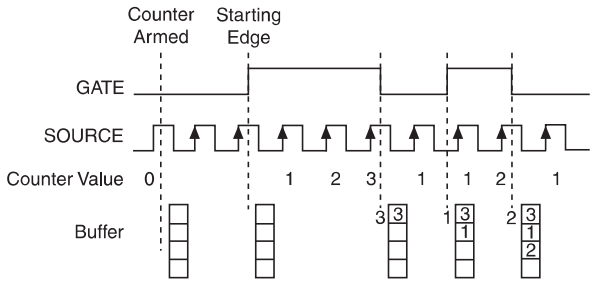

For information about connecting counter signals, refer to the *Default Counter/Timer Routing* section.

Pulse versus Semi-Period Measurements

In hardware, pulse measurement and semi-period are the same measurement. Both measure the high and low times of a pulse. The functional difference between the two measurements is how the data is returned. In a semi-period measurement, each high or low time is considered one point of data and returned in units of seconds or ticks. In a pulse measurement, each pair of high and low times is considered one point of data and returned as a paired sample in units of frequency and duty cycle, high and low time or high and low ticks. When reading data, 10 points in a semi-period measurement will get an array of five high times and five low times. When you read 10 points in a pulse measurement, you get an array of 10 pairs of high and low times.

Also, pulse measurements support sample clock timing while semi-period measurements do not.

Frequency Measurement

You can use the counters to measure frequency in several different ways. Refer to the following sections for information about cDAQ chassis frequency measurement options:

- *Low Frequency with One Counter*
- *High Frequency with Two Counters*
- *Large Range of Frequencies with Two Counters*
- *Sample Clocked Buffered Frequency Measurement*

Low Frequency with One Counter

For low frequency measurements with one counter, you measure one period of your signal using a known timebase.

You can route the signal to measure (*fx*) to the Gate of a counter. You can route a known timebase (*fk*) to the Source of the counter. The known timebase can be an onboard timebase, such as 80 MHz Timebase, 20 MHz Timebase, or 100 kHz Timebase, or any other signal with a known rate.

You can configure the counter to measure one period of the gate signal. The frequency of *fx* is the inverse of the period. Figure 5-12 illustrates this method.

Figure 5-12. Low Frequency with One Counter

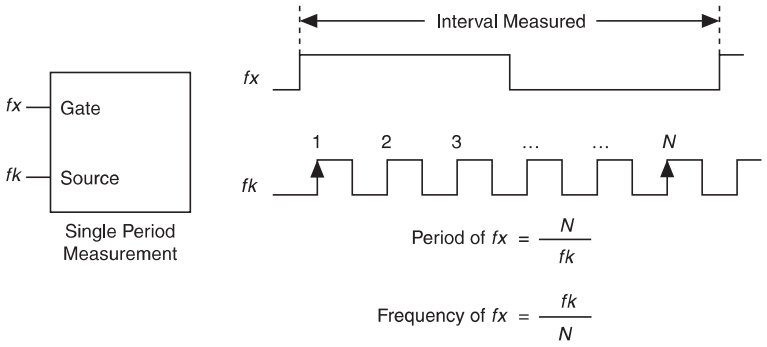

High Frequency with Two Counters

For high frequency measurements with two counters, you measure one pulse of a known width using your signal and derive the frequency of your signal from the result.

Note Counter 0 is always paired with Counter 1. Counter 2 is always paired with Counter 3.

In this method, you route a pulse of known duration (*T*) to the Gate of a counter. You can generate the pulse using a second counter. You also can generate the pulse externally and connect it to a PFI terminal. You only need to use one counter if you generate the pulse externally.

Route the signal to measure (*fx*) to the Source of the counter. Configure the counter for a single pulse-width measurement. If you measure the width of pulse *T* to be *N* periods of *fx*, the frequency of *fx* is *N*/*T*.

Figure 5-13 illustrates this method. Another option is to measure the width of a known period instead of a known pulse.

Figure 5-13. High Frequency with Two Counters

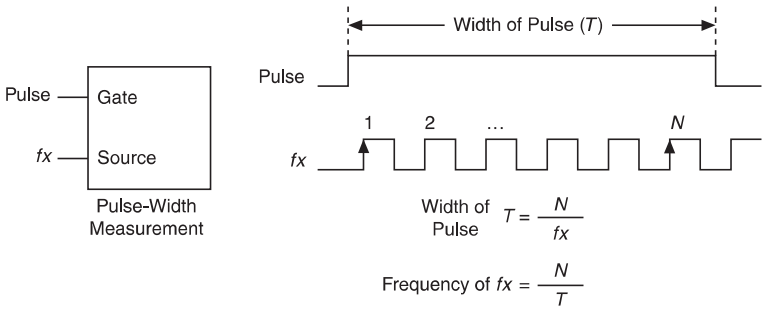

Large Range of Frequencies with Two Counters

By using two counters, you can accurately measure a signal that might be high or low frequency. This technique is called reciprocal frequency measurement. When measuring a large range of frequencies with two counters, you generate a long pulse using the signal to measure. You then measure the long pulse with a known timebase. The cDAQ chassis can measure this long pulse more accurately than the faster input signal.

Note Counter 0 is always paired with Counter 1. Counter 2 is always paired with Counter 3.

You can route the signal to measure to the Source input of Counter 0, as shown in Figure 5-14. Assume this signal to measure has frequency *fx*. NI-DAQmx automatically configures Counter 0 to generate a single pulse that is the width of *N* periods of the source input signal.

Figure 5-14. Large Range of Frequencies with Two Counters

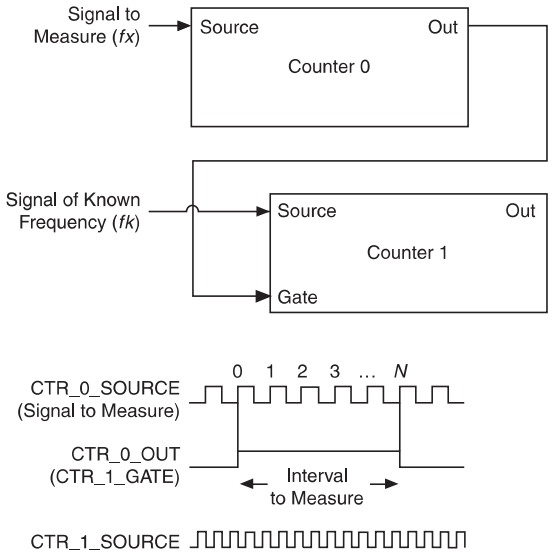

Next, route the Counter 0 Internal Output signal to the Gate input of Counter 1. You can route a signal of known frequency (*fk*) to the Counter 1 Source input. Configure Counter 1 to perform a single pulse-width measurement. Suppose the result is that the pulse width is *J* periods of the *fk* clock.

From Counter 0, the length of the pulse is *N*/*fx*. From Counter 1, the length of the same pulse is *J*/*fk*. Therefore, the frequency of *fx* is given by $fx = fk * (N/J)$.

Sample Clocked Buffered Frequency Measurement

Sample clocked buffered point frequency measurements can either be a single frequency measurement or an average between sample clocks. Use **CI.Freq.EnableAveraging** to set the behavior. For buffered frequency, the default is True.

A sample clocked buffered frequency measurement with **CI.Freq.EnableAveraging** set to True uses the embedded counter and a sample clock to perform a frequency measurement. For each sample clock period, the embedded counter counts the signal to measure (*fx*) and the primary counter counts the internal time-base of a known frequency (*fk*). Suppose T1 is the number of ticks of the unknown signal counted between sample clocks and T2 is the number of ticks counted of the known timebase as shown in Figure 5-15. The frequency measured is:

$$fx = fk * (T1/T2)$$

Figure 5-15. Sample Clocked Buffered Frequency Measurement (Averaging)

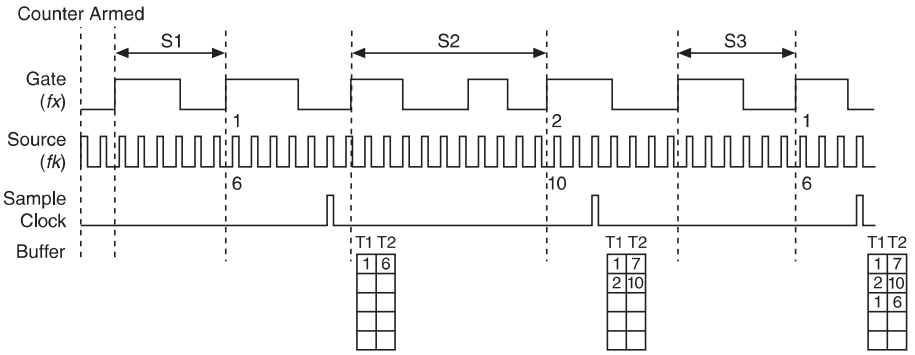

When **CI.Freq.EnableAveraging** is set to false, the frequency measurement returns the frequency of the pulse just before the sample clock. This single measurement is a single frequency measurement and is not an average between clocks as shown in Figure 5-16.

Figure 5-16. Sample Clocked Buffered Frequency Measurement (Non-Averaging)

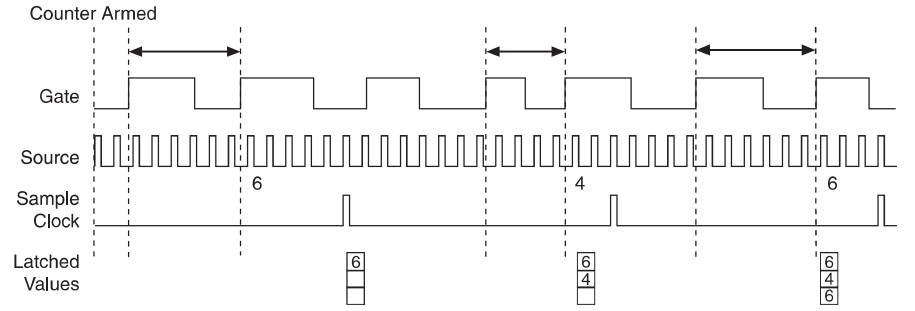

With sample clocked frequency measurements, ensure that the frequency to measure is twice as fast as the sample clock to prevent a measurement overflow.

Choosing a Method for Measuring Frequency

The best method to measure frequency depends on several factors including the expected frequency of the signal to measure, the desired accuracy, how many counters are available, and how long the measurement can take. For all frequency measurement methods, assume the following:

fx	is the frequency to be measured if no error
fk	is the known source or gate frequency
measurement time (*T*)	is the time it takes to measure a single sample
Divide down (*N*)	is the integer to divide down measured frequency, only used in large range two counters
fs	is the sample clock rate, only used in sample clocked frequency measurements

Here is how these variables apply to each method, summarized in Table 5-2.

- **One counter**—With one counter measurements, a known timebase is used for the source frequency (*fk*). The measurement time is the period of the frequency to be measured, or 1/*fx*.
- **Two counter high frequency**—With the two counter high frequency method, the second counter provides a known measurement time. The gate frequency equals 1/*measurement time*.
- **Two counter large range**—The two counter larger range measurement is the same as a one counter measurement, but now the user has an integer divide down of the signal. An internal timebase is still used for the source frequency (*fk*), but the divide down means that the measurement time is the period of the divided down signal, or *N*/*fx* where *N* is the divide down.
- **Sample clocked**—For sample clocked frequency measurements, a known timebase is counted for the source frequency (*fk*). The measurement time is the period of the sample clock (*fs*).

Table 5-2. Frequency Measurement Methods

Variable	Sample Clocked	One Counter	Two Counter	
			High Frequency	Large Range
fk	Known timebase	Known timebase	$\frac{1}{\text{gating period}}$	Known timebase
Measurement time	$\frac{1}{fs}$	$\frac{1}{fx}$	gating period	$\frac{N}{fx}$
Max. frequency error	$fx \times \frac{fx}{fk \times \left\lfloor \frac{fx}{fs} - 1 \right\rfloor}$	$fx \times \frac{fx}{fk - fx}$	*fk*	$fx \times \frac{fx}{N \times fk - fx}$
Max. error %	$\frac{fx}{fk \times \left\lfloor \frac{fx}{fs} - 1 \right\rfloor}$	$\frac{fx}{fk - fx}$	$\frac{fk}{fx}$	$\frac{fx}{N \times fk - fx}$
Note: Accuracy equations do not take clock stability into account. Refer to the specifications document for your cDAQ chassis for information about clock stability.				

Which Method Is Best?

This depends on the frequency to be measured, the rate at which you want to monitor the frequency and the accuracy you desire. Take for example, measuring a 50 kHz signal. Assuming that the measurement times for the sample clocked (with averaging) and two counter frequency measurements are configured the same, Table 5-3 summarizes the results.

Table 5-3. 50 kHz Frequency Measurement Methods

Variable	Sample Clocked	One Counter	Two Counter	
			High Frequency	Large Range
fx	50,000	50,000	50,000	50,000
fk	80 M	80 M	1,000	80 M
Measurement time (*mS*)	1	.02	1	1
N	—	—	—	50

Table 5-3. 50 kHz Frequency Measurement Methods (Continued)

Variable	Sample Clocked	One Counter	Two Counter	
			High Frequency	Large Range
Max. frequency error (Hz)	.638	31.27	1,000	.625
Max. error %	.00128	.0625	2	.00125

From this, you can see that while the measurement time for one counter is shorter, the accuracy is best in the sample clocked and two counter large range measurements. For another example, Table 5-4 shows the results for 5 MHz.

Table 5-4. 5 MHz Frequency Measurement Methods

Variable	Sample Clocked	One Counter	Two Counter	
			High Frequency	Large Range
fx	5 M	5 M	5 M	5 M
fk	80 M	80 M	1,000	80 M
Measurement time (*mS*)	1	.0002	1	1
N	—	—	—	5,000
Max. Frequency error (Hz)	62.51	333 k	1,000	62.50
Max. Error %	.00125	6.67	.02	.00125

Again the measurement time for the one counter measurement is lowest but the accuracy is lower. Note that the accuracy and measurement time of the sample clocked and two counter large range are almost the same. The advantage of the sample clocked method is that even when the frequency to measure changes, the measurement time does not and error percentage varies little. For example, if you configured a large range two counter measurement to use a divide down of 50 for a 50 k signal, then you would get the accuracy measurement time and accuracy listed in Table 5-3. But if your signal ramped up to 5 M, then with a divide down of 50, your measurement time is 0.01 ms, but your error is now 0.125%. The error with a sample clocked frequency measurement is not as dependent on the measured frequency so at 50 k and 5 M with a measurement time of 1 ms the error percentage is still close to 0.00125%. One of the

disadvantages of a sample clocked frequency measurement is that the frequency to be measured must be at least twice the sample clock rate to ensure that a full period of the frequency to be measured occurs between sample clocks.

- Low frequency measurements with one counter is a good method for many applications. However, the accuracy of the measurement decreases as the frequency increases.
- High frequency measurements with two counters is accurate for high frequency signals. However, the accuracy decreases as the frequency of the signal to measure decreases. At very low frequencies, this method may be too inaccurate for your application. Another disadvantage of this method is that it requires two counters (if you cannot provide an external signal of known width). An advantage of high frequency measurements with two counters is that the measurement completes in a known amount of time.
- Measuring a large range of frequencies with two counters measures high and low frequency signals accurately. However, it requires two counters, and it has a variable sample time and variable error % dependent on the input signal.

Table 5-5 summarizes some of the differences in methods of measuring frequency.

Table 5-5. Frequency Measurement Method Comparison

Method	Number of Counters Used	Number of Measurements Returned	Measures High Frequency Signals Accurately	Measures Low Frequency Signals Accurately
Low frequency with one counter	1	1	Poor	Good
High frequency with two counters	1 or 2	1	Good	Poor
Large range of frequencies with two counters	2	1	Good	Good
Sample clocked (averaged)	1	1	Good	Good

For information about connecting counter signals, refer to the *Default Counter/Timer Routing* section.

Period Measurement

In period measurements, the counter measures a period on its Gate input signal after the counter is armed. You can configure the counter to measure the period between two rising edges or two falling edges of the Gate input signal.

You can route an internal or external periodic clock signal (with a known period) to the Source input of the counter. The counter counts the number of rising (or falling) edges occurring on the Source input between the two active edges of the Gate signal.

You can calculate the period of the Gate input by multiplying the period of the Source signal by the number of edges returned by the counter.

Period measurements return the inverse results of frequency measurements. Refer to the *Frequency Measurement* section for more information.

Position Measurement

You can use the counters to perform position measurements with quadrature encoders or two-pulse encoders. You can measure angular position with X1, X2, and X4 angular encoders. Linear position can be measured with two-pulse encoders. You can choose to do either a single point (on-demand) position measurement or a buffered (sample clock) position measurement. You must arm a counter to begin position measurements.

Refer to the following sections for more information about the cDAQ chassis position measurement options:

- *Measurements Using Quadrature Encoders*
- *Measurements Using Two Pulse Encoders*
- *Buffered (Sample Clock) Position Measurement*

Measurements Using Quadrature Encoders

The counters can perform measurements of quadrature encoders that use X1, X2, or X4 encoding. A quadrature encoder can have up to three channels—channels A, B, and Z.

- **X1 Encoding**—When channel A leads channel B in a quadrature cycle, the counter increments. When channel B leads channel A in a quadrature cycle, the counter decrements. The amount of increments and decrements per cycle depends on the type of encoding—X1, X2, or X4.

  Figure 5-17 shows a quadrature cycle and the resulting increments and decrements for X1 encoding. When channel A leads channel B, the increment occurs on the rising edge of channel A. When channel B leads channel A, the decrement occurs on the falling edge of channel A.

Figure 5-17. X1 Encoding

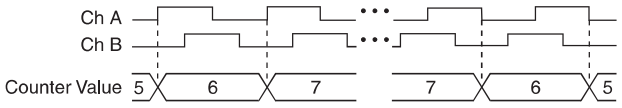

- **X2 Encoding**—The same behavior holds for X2 encoding except the counter increments or decrements on each edge of channel A, depending on which channel leads the other. Each cycle results in two increments or decrements, as shown in Figure 5-18.

Figure 5-18. X2 Encoding

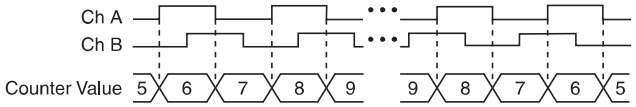

- **X4 Encoding**—Similarly, the counter increments or decrements on each edge of channels A and B for X4 encoding. Whether the counter increments or decrements depends on which channel leads the other. Each cycle results in four increments or decrements, as shown in Figure 5-19.

Figure 5-19. X4 Encoding

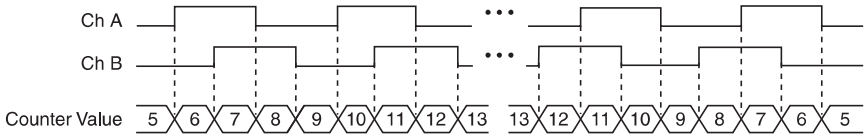

Channel Z Behavior

Some quadrature encoders have a third channel, channel Z, which is also referred to as the index channel. A high level on channel Z causes the counter to be reloaded with a specified value in a specified phase of the quadrature cycle. You can program this reload to occur in any one of the four phases in a quadrature cycle.

Channel Z behavior—when it goes high and how long it stays high—differs with quadrature encoder designs. You must refer to the documentation for your quadrature encoder to obtain timing of channel Z with respect to channels A and B. You must then ensure that channel Z is high during at least a portion of the phase you specify for reload. For instance, in Figure 5-20, channel Z is never high when channel A is high and channel B is low. Thus, the reload must occur in some other phase.

In Figure 5-20, the reload phase is when both channel A and channel B are low. The reload occurs when this phase is true and channel Z is high. Incrementing and decrementing takes priority over reloading. Thus, when the channel B goes low to enter the reload phase, the increment occurs first. The reload occurs within one maximum timebase period after the reload phase becomes true. After the reload occurs, the counter continues to count as before. The figure illustrates channel Z reload with X4 decoding.

Figure 5-20. Channel Z Reload with X4 Decoding

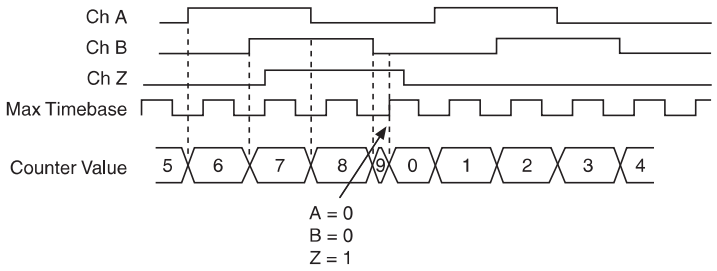

Measurements Using Two Pulse Encoders

The counter supports two pulse encoders that have two channels—channels A and B.

The counter increments on each rising edge of channel A. The counter decrements on each rising edge of channel B, as shown in Figure 5-21.

Figure 5-21. Measurements Using Two Pulse Encoders

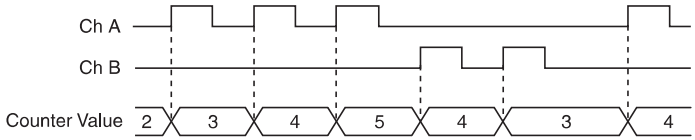

For information about connecting counter signals, refer to the *Default Counter/Timer Routing* section.

Buffered (Sample Clock) Position Measurement

With buffered position measurement (position measurement using a sample clock), the counter increments based on the encoding used after the counter is armed. The value of the counter is sampled on each active edge of a sample clock. The STC3 transfers the sampled values to host memory using a high-speed data stream. The count values returned are the cumulative counts since the counter armed event; that is, the sample clock does not reset the counter. You can route the counter sample clock to the Gate input of the counter. You can configure the counter to sample on the rising or falling edge of the sample clock.

Figure 5-22 shows an example of a buffered X1 position measurement.

Figure 5-22. Buffered Position Measurement

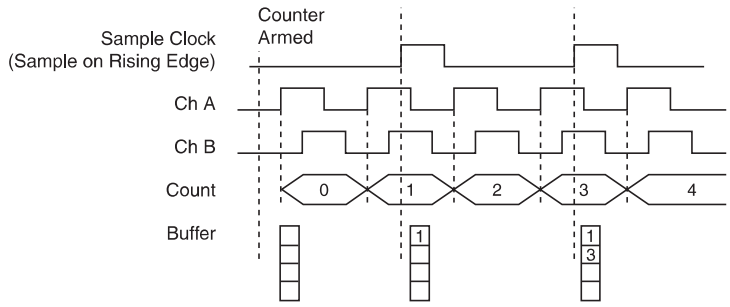

Two-Signal Edge-Separation Measurement

Two-signal edge-separation measurement is similar to pulse-width measurement, except that there are two measurement signals—Aux and Gate. An active edge on the Aux input starts the counting and an active edge on the Gate input stops the counting. You must arm a counter to begin a two edge separation measurement.

After the counter has been armed and an active edge occurs on the Aux input, the counter counts the number of rising (or falling) edges on the Source. The counter ignores additional edges on the Aux input.

The counter stops counting upon receiving an active edge on the Gate input. The counter stores the count in the FIFO.

You can configure the rising or falling edge of the Aux input to be the active edge. You can configure the rising or falling edge of the Gate input to be the active edge.

Use this type of measurement to count events or measure the time that occurs between edges on two signals. This type of measurement is sometimes referred to as start/stop trigger measurement, second gate measurement, or A-to-B measurement.

Refer to the following sections for more information about the cDAQ chassis edge-separation measurement options:

- *Single Two-Signal Edge-Separation Measurement*
- *Implicit Buffered Two-Signal Edge-Separation Measurement*
- *Sample Clocked Buffered Two-Signal Separation Measurement*

Single Two-Signal Edge-Separation Measurement

With single two-signal edge-separation measurement, the counter counts the number of rising (or falling) edges on the Source input occurring between an active edge of the Gate signal and an active edge of the Aux signal. The counter then stores the count in the FIFO and ignores other edges on its inputs. Software then reads the stored count.

Figure 5-23 shows an example of a single two-signal edge-separation measurement.

Figure 5-23. Single Two-Signal Edge-Separation Measurement

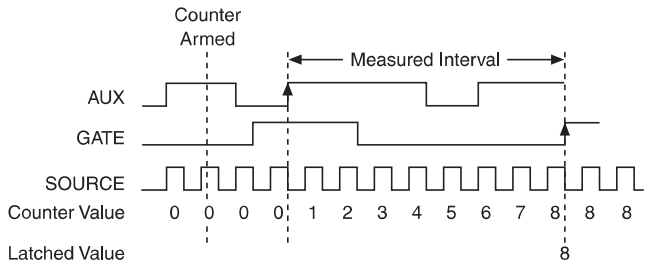

Implicit Buffered Two-Signal Edge-Separation Measurement

Implicit buffered and single two-signal edge-separation measurements are similar, but implicit buffered measurement measures multiple intervals.

The counter counts the number of rising (or falling) edges on the Source input occurring between an active edge of the Gate signal and an active edge of the Aux signal. The counter then stores the count in the FIFO. On the next active edge of the Gate signal, the counter begins another measurement. The STC3 transfers the sampled values to host memory using a high-speed data stream.

Figure 5-24 shows an example of an implicit buffered two-signal edge-separation measurement.

Figure 5-24. Implicit Buffered Two-Signal Edge-Separation Measurement

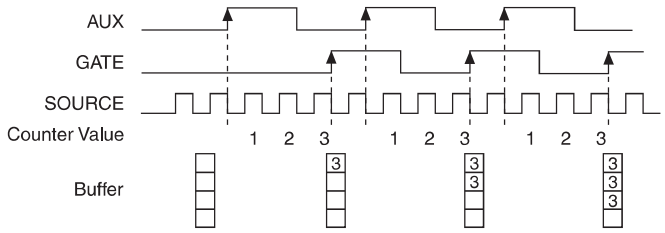

Sample Clocked Buffered Two-Signal Separation Measurement

A sample clocked buffered two-signal separation measurement is similar to single two-signal separation measurement, but buffered two-signal separation measurement takes measurements over multiple intervals correlated to a sample clock. The counter counts the number of rising (or falling) edges on the Source input occurring between an active edge of the Gate signal and an active edge of the Aux signal. The counter then stores the count in the FIFO on a sample clock edge. On the next active edge of the Gate signal, the counter begins another measurement. The STC3 transfers the sampled values to host memory using a high-speed data stream.

Figure 5-25 shows an example of a sample clocked buffered two-signal separation measurement.

Figure 5-25. Sample Clocked Buffered Two-Signal Separation Measurement

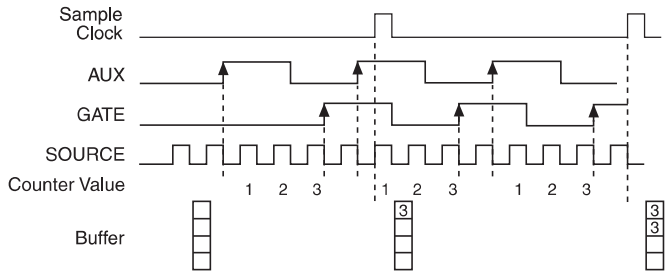

Note If an active edge on the Gate and an active edge on the Aux does not occur between sample clocks, an overrun error occurs.

For information about connecting counter signals, refer to the *Default Counter/Timer Routing* section.

Counter Output Applications

The following sections list the various counter output applications available on the cDAQ chassis:

- *Simple Pulse Generation*
- *Pulse Train Generation*
- *Frequency Generation*
- *Frequency Division*
- *Pulse Generation for ETS*

Simple Pulse Generation

Refer to the following sections for more information about the cDAQ chassis simple pulse generation options:

- *Single Pulse Generation*
- *Single Pulse Generation with Start Trigger*

Single Pulse Generation

The counter can output a single pulse. The pulse appears on the Counter *n* Internal Output signal of the counter.

You can specify a delay from when the counter is armed to the beginning of the pulse. The delay is measured in terms of a number of active edges of the Source input.

You can specify a pulse width. The pulse width is also measured in terms of a number of active edges of the Source input. You also can specify the active edge of the Source input (rising or falling).

Figure 5-26 shows a generation of a pulse with a pulse delay of four and a pulse width of three (using the rising edge of Source).

Figure 5-26. Single Pulse Generation

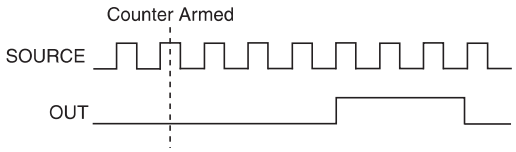

Single Pulse Generation with Start Trigger

The counter can output a single pulse in response to one pulse on a hardware Start Trigger signal. The pulse appears on the Counter *n* Internal Output signal of the counter.

You can specify a delay from the Start Trigger to the beginning of the pulse. You also can specify the pulse width. The delay is measured in terms of a number of active edges of the Source input.

You can specify a pulse width. The pulse width is also measured in terms of a number of active edges of the Source input. You can also specify the active edge of the Source input (rising and falling).

Figure 5-27 shows a generation of a pulse with a pulse delay of four and a pulse width of three (using the rising edge of Source).

Figure 5-27. Single Pulse Generation with Start Trigger

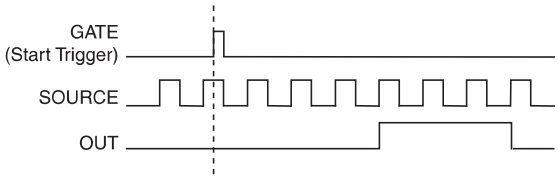

Pulse Train Generation

Refer to the following sections for more information about the cDAQ chassis pulse train generation options:

- *Finite Pulse Train Generation*
- *Retriggerable Pulse or Pulse Train Generation*
- *Continuous Pulse Train Generation*
- *Buffered Pulse Train Generation*
- *Finite Implicit Buffered Pulse Train Generation*

- *Continuous Buffered Implicit Pulse Train Generation*
- *Finite Buffered Sample Clocked Pulse Train Generation*
- *Continuous Buffered Sample Clocked Pulse Train Generation*

Finite Pulse Train Generation

This function generates a train of pulses with programmable frequency and duty cycle for a predetermined number of pulses. With cDAQ chassis counters, the primary counter generates the specified pulse train and the embedded counter counts the pulses generated by the primary counter. When the embedded counter reaches the specified tick count, it generates a trigger that stops the primary counter generation.

Figure 5-28. Finite Pulse Train Generation: Four Ticks Initial Delay, Four Pulses

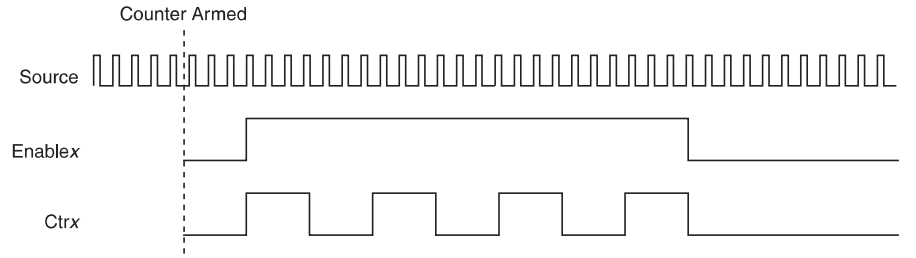

Retriggerable Pulse or Pulse Train Generation

The counter can output a single pulse or multiple pulses in response to each pulse on a hardware Start Trigger signal. The generated pulses appear on the Counter *n* Internal Output signal of the counter.

You can route the Start Trigger signal to the Gate input of the counter. You can specify a delay from the Start Trigger to the beginning of each pulse. You also can specify the pulse width. The delay and pulse width are measured in terms of a number of active edges of the Source input. The initial delay can be applied to only the first trigger or to all triggers using the **CO.EnableInitalDelayOnRetrigger** property. The default for a single pulse is True, while the default for finite pulse trains is False.

The counter ignores the Gate input while a pulse generation is in progress. After the pulse generation is finished, the counter waits for another Start Trigger signal to begin another pulse generation. For retriggered pulse generation, pause triggers are not allowed since the pause trigger also uses the gate input.

Figure 5-29 shows a generation of two pulses with a pulse delay of five and a pulse width of three (using the rising edge of Source) with **CO.EnableInitalDelayOnRetrigge**r set to the default True.

Figure 5-29. Retriggerable Single Pulse Generation with Initial Delay on Retrigger

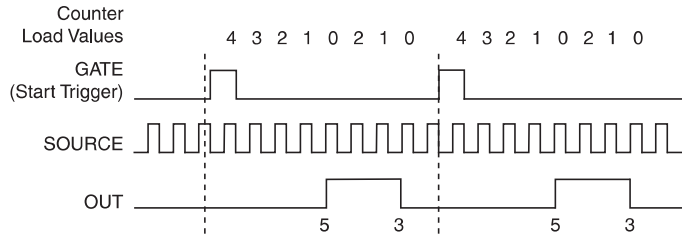

Figure 5-30 shows the same pulse train with **CO.EnableInitalDelayOnRetrigger** set to the default False.

Figure 5-30. Retriggerable Single Pulse Generation False

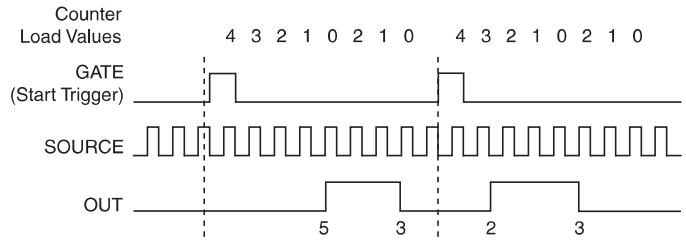

Note The minimum time between the trigger and the first active edge is two ticks of the source.

For information about connecting counter signals, refer to the *Default Counter/Timer Routing* section.

Continuous Pulse Train Generation

This function generates a train of pulses with programmable frequency and duty cycle. The pulses appear on the Counter *n* Internal Output signal of the counter.

You can specify a delay from when the counter is armed to the beginning of the pulse train. The delay is measured in terms of a number of active edges of the Source input.

You specify the high and low pulse widths of the output signal. The pulse widths are also measured in terms of a number of active edges of the Source input. You also can specify the active edge of the Source input (rising or falling).

The counter can begin the pulse train generation as soon as the counter is armed, or in response to a hardware Start Trigger. You can route the Start Trigger to the Gate input of the counter.

You also can use the Gate input of the counter as a Pause Trigger (if it is not used as a Start Trigger). The counter pauses pulse generation when the Pause Trigger is active.

Figure 5-31 shows a continuous pulse train generation (using the rising edge of Source).

Figure 5-31. Continuous Pulse Train Generation

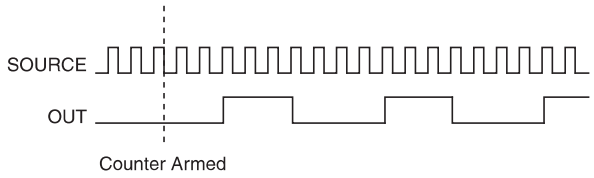

Continuous pulse train generation is sometimes called frequency division. If the high and low pulse widths of the output signal are *M* and *N* periods, then the frequency of the Counter *n* Internal Output signal is equal to the frequency of the Source input divided by *M* + *N*.

For information about connecting counter signals, refer to the *Default Counter/Timer Routing* section.

Buffered Pulse Train Generation

The cDAQ chassis counters can use the FIFO to perform a buffered pulse train generation. This pulse train can use implicit timing or sample clock timing. When using implicit timing, the pulse idle time and active time changes with each sample you write. With sample clocked timing, each sample you write updates the idle time and active time of your generation on each sample clock edge. Idle time and active time can also be defined in terms of frequency and duty cycle or idle ticks and active ticks.

Note On buffered implicit pulse trains the pulse specifications in the DAQmx Create Counter Output Channel are ignored so that you generate the number of pulses defined in the multipoint write. On buffered sample clock pulse trains the pulse specifications in the DAQmx Create Counter Output Channel are generated after the counters starts and before the first sample clock so that you generate the number of updates defined in the multipoint write.

Finite Implicit Buffered Pulse Train Generation

This function generates a predetermined number of pulses with variable idle and active times. Each point you write generates a single pulse. The number of pairs of idle and active times (pulse specifications) you write determines the number of pulses generated. All points are generated back to back to create a user defined pulse train.

Table 5-6 and Figure 5-32 detail a finite implicit generation of three samples.

Table 5-6. Finite Implicit Buffered Pulse Train Generation

Sample	Idle Ticks	Active Ticks
1	2	2
2	3	4
3	2	2

Figure 5-32. Finite Implicit Buffered Pulse Train Generation

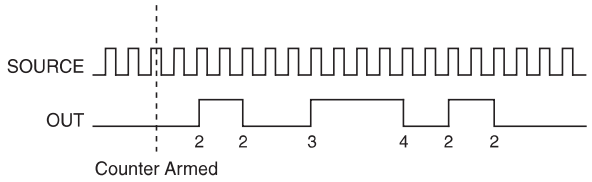

Continuous Buffered Implicit Pulse Train Generation

This function generates a continuous train of pulses with variable idle and active times. Instead of generating a set number of data samples and stopping, a continuous generation continues until you stop the operation. Each point you write generates a single pulse. All points are generated back to back to create a user defined pulse train.

Finite Buffered Sample Clocked Pulse Train Generation

This function generates a predetermined number of pulse train updates. Each point you write defines pulse specifications that are updated with each sample clock. When a sample clock occurs, the current pulse (idle followed by active) finishes generation and the next pulse updates with the next sample specifications.

Note When the last sample is generated, the pulse train continues to generate with these specifications until the task is stopped.

Table 5-7 and Figure 5-33 detail a finite sample clocked generation of three samples where the pulse specifications from the create channel are two ticks idle, two ticks active, and three ticks initial delay.

Table 5-7. Finite Buffered Sample Clocked Pulse Train Generation

Sample	Idle Ticks	Active Ticks
1	3	3
2	2	2
3	3	3

Figure 5-33. Finite Buffered Sample Clocked Pulse Train Generation

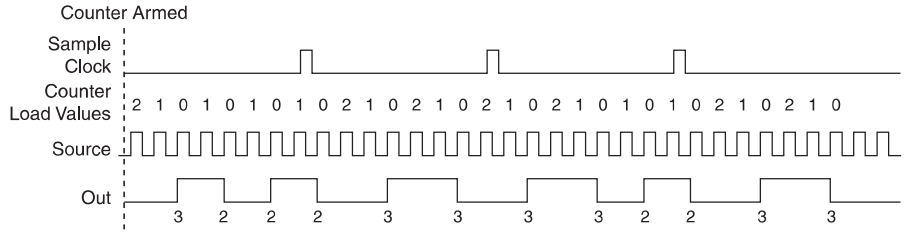

There are several different methods of continuous generation that control what data is written. These methods are regeneration, FIFO regeneration, and non-regeneration modes.

Regeneration is the repetition of the data that is already in the buffer.

Standard regeneration is when data from the PC buffer is continually downloaded to the FIFO to be written out. New data can be written to the PC buffer at any time without disrupting the output. With FIFO regeneration, the entire buffer is downloaded to the FIFO and regenerated from there. Once the data is downloaded, new data cannot be written to the FIFO. To use FIFO regeneration, the entire buffer must fit within the FIFO size. The advantage of using FIFO regeneration is that it does not require communication with the main host memory once the operation is started, thereby preventing any problems that may occur due to excessive bus traffic.

With non-regeneration, old data is not repeated. New data must be continually written to the buffer. If the program does not write new data to the buffer at a fast enough rate to keep up with the generation, the buffer underflows and causes an error.

Continuous Buffered Sample Clocked Pulse Train Generation

This function generates a continuous train of pulses with variable idle and active times. Instead of generating a set number of data samples and stopping, a continuous generation continues until you stop the operation. Each point you write specifies pulse specifications that are updated with each sample clock. When a sample clock occurs, the current pulse finishes generation and the next pulse uses the next sample specifications.

Frequency Generation

You can generate a frequency by using a counter in pulse train generation mode or by using the frequency generator circuit, as described in the *Using the Frequency Generator* section.

Using the Frequency Generator

The frequency generator can output a square wave at many different frequencies. The frequency generator is independent of the four general-purpose 32-bit counter/timer modules on the cDAQ chassis.

Figure 5-34 shows a block diagram of the frequency generator.

Figure 5-34. Frequency Generator Block Diagram

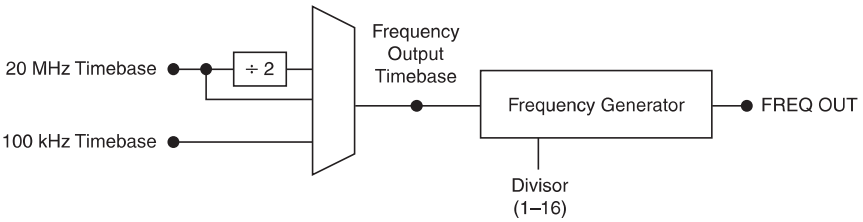

The frequency generator generates the Frequency Output signal. The Frequency Output signal is the Frequency Output Timebase divided by a number you select from 1 to 16. The Frequency Output Timebase can be either the 20 MHz Timebase, the 20 MHz Timebase divided by 2, or the 100 kHz Timebase.

The duty cycle of Frequency Output is 50% if the divider is either 1 or an even number. For an odd divider, suppose the divider is set to D. In this case, Frequency Output is low for (D + 1)/2 cycles and high for (D - 1)/2 cycles of the Frequency Output Timebase.

Figure 5-35 shows the output waveform of the frequency generator when the divider is set to 5.

Figure 5-35. Frequency Generator Output Waveform

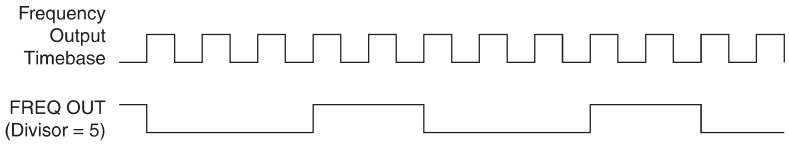

Frequency Output can be routed out to any PFI terminal. All PFI terminals are set to high-impedance at startup. The FREQ OUT signal also can be routed to many internal timing signals.

In software, program the frequency generator as you would program one of the counters for pulse train generation.

For information about connecting counter signals, refer to the *Default Counter/Timer Routing* section.

Frequency Division

The counters can generate a signal with a frequency that is a fraction of an input signal. This function is equivalent to continuous pulse train generation. Refer to the *Continuous Pulse Train Generation* section for detailed information.

For information about connecting counter signals, refer to the *Default Counter/Timer Routing* section.

Pulse Generation for ETS

In the equivalent time sampling (ETS) application, the counter produces a pulse on the output a specified delay after an active edge on Gate. After each active edge on Gate, the counter cumulatively increments the delay between the Gate and the pulse on the output by a specified amount. Thus, the delay between the Gate and the pulse produced successively increases.

The increase in the delay value can be between 0 and 255. For instance, if you specify the increment to be 10, the delay between the active Gate edge and the pulse on the output increases by 10 every time a new pulse is generated.

Suppose you program your counter to generate pulses with a delay of 100 and pulse width of 200 each time it receives a trigger. Furthermore, suppose you specify the delay increment to be 10. On the first trigger, your pulse delay will be 100, on the second it will be 110, on the third it will be 120; the process will repeat in this manner until the counter is disarmed. The counter ignores any Gate edge that is received while the pulse triggered by the previous Gate edge is in progress.

The waveform thus produced at the counter's output can be used to provide timing for undersampling applications where a digitizing system can sample repetitive waveforms that are higher in frequency than the Nyquist frequency of the system. Figure 5-36 shows an example of pulse generation for ETS; the delay from the trigger to the pulse increases after each subsequent Gate active edge.

Figure 5-36. Pulse Generation for ETS

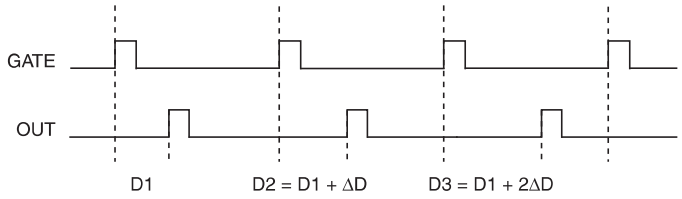

For information about connecting counter signals, refer to the *Default Counter/Timer Routing* section.

Counter Timing Signals

The cDAQ chassis features the following counter timing signals:

- *Counter n Source Signal*
- *Counter n Gate Signal*
- *Counter n Aux Signal*
- *Counter n A Signal*
- *Counter n B Signal*
- *Counter n Z Signal*
- *Counter n Up_Down Signal*
- *Counter n HW Arm Signal*
- *Counter n Sample Clock Signal*
- *Counter n Internal Output Signal*
- *Counter n TC Signal*
- *Frequency Output Signal*

In this section, *n* refers to the cDAQ chassis Counter 0, 1, 2, or 3. For example, Counter *n* Source refers to four signals—Counter 0 Source (the source input to Counter 0), Counter 1 Source (the source input to Counter 1), Counter 2 Source (the source input to Counter 2), or Counter 3 Source (the source input to Counter 3).

Note All counter timing signals can be filtered. Refer to the *PFI Filters* section of Chapter 4, *Digital Input/Output and PFI*, for more information.

Counter *n* Source Signal

The selected edge of the Counter *n* Source signal increments and decrements the counter value depending on the application the counter is performing. Table 5-8 lists how this terminal is used in various applications.

Table 5-8. Counter Applications and Counter *n* Source

Application	Purpose of Source Terminal
Pulse Generation	Counter Timebase
One Counter Time Measurements	Counter Timebase
Two Counter Time Measurements	Input Terminal
Non-Buffered Edge Counting	Input Terminal
Buffered Edge Counting	Input Terminal
Two-Edge Separation	Counter Timebase

Routing a Signal to Counter *n* Source

Each counter has independent input selectors for the Counter *n* Source signal. Any of the following signals can be routed to the Counter *n* Source input:

- 80 MHz Timebase
- 20 MHz Timebase
- 100 kHz Timebase
- Any PFI terminal
- Analog Comparison Event
- Change Detection Event

In addition, TC or Gate from a counter can be routed to a different counter source.

Some of these options may not be available in some driver software. Refer to the *Device Routing in MAX* topic in the *NI-DAQmx Help* or the *LabVIEW Help* for more information about available routing options.

Routing Counter *n* Source to an Output Terminal

You can route Counter *n* Source out to any PFI terminal.

Counter *n* Gate Signal

The Counter *n* Gate signal can perform many different operations depending on the application including starting and stopping the counter, and saving the counter contents.

Routing a Signal to Counter *n* Gate

Each counter has independent input selectors for the Counter *n* Gate signal. Any of the following signals can be routed to the Counter *n* Gate input:

- Any PFI terminal
- AI Reference Trigger
- AI Start Trigger
- AO Sample Clock
- DI Sample Clock
- DI Reference Trigger
- DO Sample Clock
- Change Detection Event
- Analog Comparison Event

In addition, a counter's Internal Output or Source can be routed to a different counter's gate.

Some of these options may not be available in some driver software. Refer to the *Device Routing in MAX* topic in the *NI-DAQmx Help* or the *LabVIEW Help* for more information about available routing options.

Routing Counter *n* Gate to an Output Terminal

You can route Counter *n* Gate out to any PFI terminal.

Counter *n* Aux Signal

The Counter *n* Aux signal indicates the first edge in a two-signal edge-separation measurement.

Routing a Signal to Counter *n* Aux

Each counter has independent input selectors for the Counter *n* Aux signal. Any of the following signals can be routed to the Counter *n* Aux input:

- Any PFI terminal
- AI Reference Trigger
- AI Start Trigger
- Analog Comparison Event
- Change Detection Event

In addition, a counter's Internal Output, Gate or Source can be routed to a different counter's Aux. A counter's own gate can also be routed to its Aux input.

Some of these options may not be available in some driver software. Refer to the *Device Routing in MAX* topic in the *NI-DAQmx Help* or the *LabVIEW Help* for more information about available routing options.

Counter *n* A, Counter *n* B, and Counter *n* Z Signals

Counter *n* B can control the direction of counting in edge counting applications. Use the A, B, and Z inputs to each counter when measuring quadrature encoders or measuring two pulse encoders.

Routing Signals to A, B, and Z Counter Inputs

Each counter has independent input selectors for each of the A, B, and Z inputs. Any of the following signals can be routed to each input:

- Any PFI terminal
- Analog Comparison Event

Routing Counter *n* Z Signal to an Output Terminal

You can route Counter *n* Z out to any PFI terminal.

Counter *n* Up_Down Signal

Counter *n* Up_Down is another name for the Counter *n* B signal.

Counter *n* HW Arm Signal

The Counter *n* HW Arm signal enables a counter to begin an input or output function.

To begin any counter input or output function, you must first enable, or arm, the counter. In some applications, such as a buffered edge count, the counter begins counting when it is armed. In other applications, such as single pulse-width measurement, the counter begins waiting for the Gate signal when it is armed. Counter output operations can use the arm signal in addition to a start trigger.

Software can arm a counter or configure counters to be armed on a hardware signal. Software calls this hardware signal the Arm Start Trigger. Internally, software routes the Arm Start Trigger to the Counter *n* HW Arm input of the counter.

Routing Signals to Counter *n* HW Arm Input

Any of the following signals can be routed to the Counter *n* HW Arm input:

- Any PFI terminal
- AI Reference Trigger
- AI Start Trigger
- Analog Comparison Event
- Change Detection Event

A counter's Internal Output can be routed to a different counter's HW Arm.

Some of these options may not be available in some driver software. Refer to the *Device Routing in MAX* topic in the *NI-DAQmx Help* or the *LabVIEW Help* for more information about available routing options.

Counter *n* Sample Clock Signal

Use the Counter *n* Sample Clock (Ctr*n*SampleClock) signal to perform sample clocked acquisitions and generations.

You can specify an internal or external source for Counter *n* Sample Clock. You also can specify whether the measurement sample begins on the rising edge or falling edge of Counter *n* Sample Clock.

If the cDAQ chassis receives a Counter *n* Sample Clock when the FIFO is full, it reports an overflow error to the host software.

Using an Internal Source

To use Counter *n* Sample Clock with an internal source, specify the signal source and the polarity of the signal. The source can be any of the following signals:

- DI Sample Clock
- DO Sample Clock
- AI Sample Clock (ai/SampleClock, te0/SampleClock, te1/SampleClock)
- AI Convert Clock
- AO Sample Clock
- DI Change Detection output

Several other internal signals can be routed to Counter *n* Sample Clock through internal routes. Refer to *Device Routing in MAX* in the *NI-DAQmx Help* or the *LabVIEW Help* for more information.

Using an External Source

You can route any of the following signals as Counter *n* Sample Clock:

- Any PFI terminal
- Analog Comparison Event

You can sample data on the rising or falling edge of Counter *n* Sample Clock.

Routing Counter *n* Sample Clock to an Output Terminal

You can route Counter *n* Sample Clock out to any PFI terminal. The PFI circuitry inverts the polarity of Counter n Sample Clock before driving the PFI terminal.

Counter *n* Internal Output and Counter *n* TC Signals

The Counter *n* Internal Output signal changes in response to Counter *n* TC.

The two software-selectable output options are pulse output on TC and toggle output on TC. The output polarity is software-selectable for both options.

With pulse or pulse train generation tasks, the counter drives the pulse(s) on the Counter *n* Internal Output signal. The Counter *n* Internal Output signal can be internally routed to be a counter/timer input or an “external” source for AI, AO, DI, or DO timing signals.

Routing Counter *n* Internal Output to an Output Terminal

You can route Counter *n* Internal Output to any PFI terminal.

Frequency Output Signal

The Frequency Output (FREQ OUT) signal is the output of the frequency output generator.

Routing Frequency Output to a Terminal

You can route Frequency Output to any PFI terminal.

Default Counter/Timer Routing

Counter/timer signals are available to parallel digital C Series modules. To determine the signal routing options for modules installed in your system, refer to the **Device Routes** tab in MAX.

You can use these defaults, or select other sources and destinations for the counter/timer signals in NI-DAQmx. Refer to *Connecting Counter Signals* in the *NI-DAQmx Help* or the *LabVIEW Help* for more information about how to connect your signals for common counter measurements and generations. Refer to *Physical Channels* in the *NI-DAQmx Help* or the *LabVIEW Help* for a list of default PFI lines for counter functions.

Counter Triggering

Counters support three different triggering actions:

- **Arm Start Trigger**—To begin any counter input or output function, you must first enable, or arm, the counter. Software can arm a counter or configure counters to be armed on a hardware signal. Software calls this hardware signal the Arm Start Trigger. Internally, software routes the Arm Start Trigger to the Counter *n* HW Arm input of the counter.

  For counter output operations, you can use it in addition to the start and pause triggers. For counter input operations, you can use the arm start trigger to have start trigger-like behavior. The arm start trigger can be used for synchronizing multiple counter input and output tasks.

  When using an arm start trigger, the arm start trigger source is routed to the Counter *n* HW Arm signal.
- **Start Trigger**—For counter output operations, a start trigger can be configured to begin a finite or continuous pulse generation. Once a continuous generation has triggered, the pulses continue to generate until you stop the operation in software. For finite generations, the specified number of pulses is generated and the generation stops unless you use the retriggerable attribute. When you use this attribute, subsequent start triggers cause the generation to restart.

  When using a start trigger, the start trigger source is routed to the Counter *n* Gate signal input of the counter. Counter input operations can use the arm start trigger to have start trigger-like behavior.
- **Pause Trigger**—You can use pause triggers in edge counting and continuous pulse generation applications. For edge counting acquisitions, the counter stops counting edges while the external trigger signal is low and resumes when the signal goes high or vice versa. For continuous pulse generations, the counter stops generating pulses while the external trigger signal is low and resumes when the signal goes high or vice versa.

  When using a pause trigger, the pause trigger source is routed to the Counter *n* Gate signal input of the counter.

Other Counter Features

The following sections list the other counter features available on the cDAQ chassis.

Cascading Counters

You can internally route the Counter n Internal Output and Counter n TC signals of each counter to the Gate inputs of the other counter. By cascading two counters together, you can effectively create a 64-bit counter. By cascading counters, you also can enable other applications. For example, to improve the accuracy of frequency measurements, use reciprocal frequency measurement, as described in the *Large Range of Frequencies with Two Counters* section.

Prescaling

Prescaling allows the counter to count a signal that is faster than the maximum timebase of the counter. The cDAQ chassis offers 8X and 2X prescaling on each counter (prescaling can be disabled). Each prescaler consists of a small, simple counter that counts to eight (or two) and rolls over. This counter can run faster than the larger counters, which simply count the rollovers of this smaller counter. Thus, the prescaler acts as a frequency divider on the Source and puts out a frequency that is one-eighth (or one-half) of what it is accepting as shown in Figure 5-37.

Figure 5-37. Prescaling

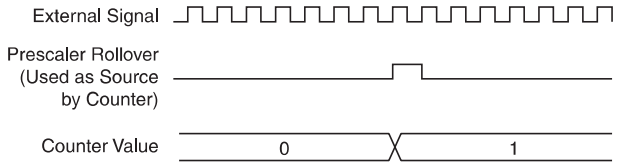

Prescaling is intended to be used for frequency measurement where the measurement is made on a continuous, repetitive signal. The prescaling counter cannot be read; therefore, you cannot determine how many edges have occurred since the previous rollover. Prescaling can be used for event counting provided it is acceptable to have an error of up to seven (or one) ticks. Prescaling can be used when the counter Source is an external signal. Prescaling is not available if the counter Source is one of the internal timebases (80 MHz Timebase, 20 MHz Timebase, or 100 kHz Timebase).

Synchronization Modes

The 32-bit counter counts up or down synchronously with the Source signal. The Gate signal and other counter inputs are asynchronous to the Source signal, so the cDAQ chassis synchronizes these signals before presenting them to the internal counter.

Depending on how you configure your chassis, the cDAQ chassis uses one of two synchronization methods:

- *80 MHz Source Mode*
- *External or Internal Source Less than 20 MHz*

80 MHz Source Mode

In 80 MHz source mode, the chassis synchronizes signals on the rising edge of the source, and counts on the third rising edge of the source. Edges are pipelined so no counts are lost, as shown in Figure 5-38.

Figure 5-38. 80 MHz Source Mode

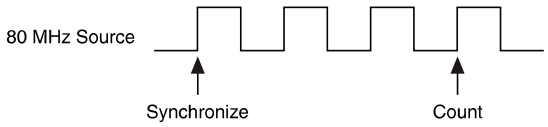

External or Internal Source Less than 20 MHz

With an external or internal source less than 20 MHz, the chassis generates a delayed Source signal by delaying the Source signal by several nanoseconds. The chassis synchronizes signals on the rising edge of the delayed Source signal, and counts on the following rising edge of the source, as shown in Figure 5-39.

Figure 5-39. External or Internal Source Less than 20 MHz

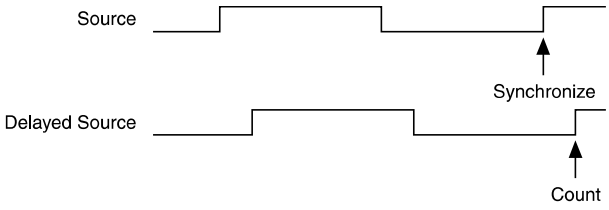

6

Digital Routing and Clock Generation

This chapter describes the digital routing and clock routing circuitry on the cDAQ chassis. Refer to the *Digital Routing* and *Clock Routing* sections.

Digital Routing

The digital routing circuitry has the following functions:

- Manages the flow of data between the bus interface and the acquisition/generation sub-systems (analog input, analog output, digital I/O, and the counters). The digital routing circuitry uses FIFOs (if present) in each sub-system to ensure efficient data movement.
- Routes timing and control signals. The acquisition/generation sub-systems use these signals to manage acquisitions and generations. These signals can come from the following sources:
  - Your C Series modules
  - User input through the PFI terminals using parallel digital C Series modules or the cDAQ-9178 chassis PFI terminals
- Routes and generates the main clock signals for the cDAQ chassis. To determine the signal routing options for C Series module(s) installed in the cDAQ chassis, refer to the **Device Routes** tab in MAX.

Clock Routing

Figure 6-1 shows the clock routing circuitry of the cDAQ chassis.

Figure 6-1. Clock Routing Circuitry

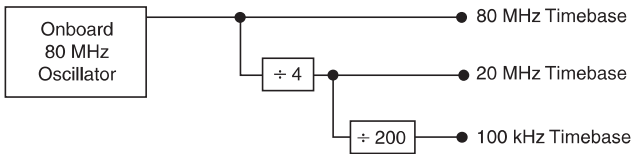

80 MHz Timebase

You can use the 80 MHz Timebase as the Source input to the 32-bit general-purpose counter/timers.

20 MHz Timebase

The 20 MHz Timebase normally generates many of the AI and AO timing signals. It can function as the Source input to the 32-bit general-purpose counter/timers.

The 20 MHz Timebase is generated by dividing down the 80 MHz Timebase, as shown in Figure 6-1.

100 kHz Timebase

You can use the 100 kHz Timebase to generate many of the AI and AO timing signals. It can also function as the Source input to the 32-bit general-purpose counter/timers.

The 100 kHz Timebase is generated by dividing down the 20 MHz Timebase by 200, as shown in Figure 6-1.

A

Where to Go from Here

This section lists where you can find example programs for the cDAQ chassis and C Series modules and relevant documentation.

Example Programs

NI-DAQmx software includes example programs to help you get started programming with the cDAQ chassis and C Series modules. Modify example code and save it in an application, or use examples to develop a new application, or add example code to an existing application.

To locate NI software examples, go to ni.com/info and enter the Info Code daqmxexp. For additional examples, refer to ni.com/examples.

To run examples without the device installed, use an NI-DAQmx simulated device. For more information, in Measurement & Automation Explorer (MAX), select **Help»Help Topics» NI-DAQmx»MAX Help for NI-DAQmx** and search for simulated devices.

Related Documentation

Each application software package and driver includes information about writing applications for taking measurements and controlling measurement devices. The following references to documents assume you have NI-DAQmx 9.8 or later.

cDAQ Chassis Documentation

The *NI cDAQ-9171 Quick Start* or *NI cDAQ-9174/9178 Quick Start* packaged with your cDAQ chassis, describes how to install your NI-DAQmx for Windows software, how to install the cDAQ chassis and C Series module, and how to confirm that your device is operating properly.

The *NI cDAQ-9171 Specifications*, *NI cDAQ-9174 Specifications*, or *NI cDAQ-9178 Specifications* lists all specifications for your cDAQ chassis. Go to ni.com/manuals and search for your cDAQ chassis.

The *NI cDAQ-917x Safety, Environmental, and Regulatory Information* packaged with your cDAQ chassis, includes important hazardous locations information (if applicable), compliance precautions, and connection information for your cDAQ chassis. Go to ni.com/manuals and search for your cDAQ chassis.

The *NI cDAQ Chassis Calibration Procedure* contains information for calibrating all National Instruments CompactDAQ chassis. Go to ni.com/manuals and search for your cDAQ chassis.

C Series Module Documentation and Specifications

For module specifications, refer to the documentation included with your C Series module or go to ni.com/manuals.

NI-DAQmx

The *NI-DAQmx Readme* lists which devices, ADEs, and NI application software are supported by this version of NI-DAQmx. Select **Start»All Programs»National Instruments» NI-DAQmx»NI-DAQ Readme**.

The *NI-DAQmx Help* contains API overviews, general information about measurement concepts, key NI-DAQmx concepts, and common applications that are applicable to all programming environments. Select **Start»All Programs»National Instruments» Start» All Programs»National Instruments»NI-DAQmx»NI-DAQmx Help**.

LabVIEW

Refer to ni.com/gettingstarted for more information about LabVIEW.

Use the *LabVIEW Help*, available by selecting **Help»LabVIEW Help** in LabVIEW, to access information about LabVIEW programming concepts, step-by-step instructions for using LabVIEW, and reference information about LabVIEW VIs, functions, palettes, menus, and tools. Refer to the following locations on the **Contents** tab of the *LabVIEW Help* for information about NI-DAQmx:

- **VI and Function Reference»Measurement I/O VIs and Functions»DAQmx - Data Acquisition VIs and Functions**—Describes the LabVIEW NI-DAQmx VIs and functions.
- **Property and Method Reference»NI-DAQmx Properties**—Contains the property reference.
- **Taking Measurements**—Contains the conceptual and how-to information you need to acquire and analyze measurement data in LabVIEW, including common measurements, measurement fundamentals, NI-DAQmx key concepts, and device considerations.

LabVIEW Real-Time

Refer to ni.com/gettingstarted for more information about getting started with LabVIEW Real-Time.

The *Real-Time Module Concepts* book of the *LabVIEW Real-Time Module Help* includes conceptual information about real-time programming techniques, application architectures, and Real-Time Module features you can use to create real-time applications. Refer to the Real-Time Module concepts before attempting to create a deterministic real-time application.

LabWindows/CVI

The **Data Acquisition** book of the *LabWindows/CVI Help* contains *Taking an NI-DAQmx Measurement in LabWindows/CVI*, which includes step-by-step instructions about creating a measurement task using the DAQ Assistant. In LabWindows™/CVI™, select **Help»Contents**, then select **Using LabWindows/CVI»Data Acquisition**. This book also contains information about accessing detailed information through the *NI-DAQmx Help*.

The **NI-DAQmx Library** book of the *LabWindows/CVI Help* contains API overviews and function reference for NI-DAQmx. Select **Library Reference»NI-DAQmx Library** in the *LabWindows/CVI Help*.

Measurement Studio

If you program your NI-DAQmx-supported device in Measurement Studio using Visual C# or Visual Basic .NET, you can interactively create channels and tasks by launching the DAQ Assistant from MAX or from within Visual Studio. You can use Measurement Studio to generate the configuration code based on your task or channel. Refer to the *DAQ Assistant Help* for additional information about generating code.

The *NI Measurement Studio Help* is fully integrated with the Microsoft Visual Studio help. To view this help file from within Visual Studio, select **Measurement Studio»NI Measurement Studio Help**. For information related to developing with NI-DAQmx, refer to the following topics within the *NI Measurement Studio Help*:

- For step-by-step instructions on how to create an NI-DAQmx application using the Measurement Studio Application Wizard and the DAQ Assistant, refer to *Walkthrough: Creating a Measurement Studio NI-DAQmx Application*.
- For help with NI-DAQmx methods and properties, refer to the *NationalInstruments.DAQmx* namespace and the *NationalInstruments.DAQmx.ComponentModel* namespace.
- For conceptual help with NI-DAQmx, refer to *Using the Measurement Studio NI-DAQmx .NET Library* and *Creating Projects with Measurement Studio NI-DAQmx*.
- For general help with programming in Measurement Studio, refer to *Getting Started with the Measurement Studio Class Libraries*.

To create an NI-DAQmx application using Visual Basic .NET or Visual C#, follow these general steps:

1. In Visual Studio, select **File»New»Project** to launch the New Project dialog box.
2. Choose a programming language (Visual C# or Visual Basic .NET), and then select **Measurement Studio** to see a list of project templates.
3. Select **NI DAQ Windows Application**. You add DAQ tasks as part of this step. Choose a project type. You add DAQ tasks as a part of this step.

ANSI C without NI Application Software

The *NI-DAQmx Help* contains API overviews and general information about measurement concepts. Select **Start»All Programs»National Instruments»NI-DAQmx» NI-DAQmx Help**.

The *NI-DAQmx C Reference Help* describes the NI-DAQmx Library functions, which you can use with National Instruments data acquisition devices to develop instrumentation, acquisition, and control applications. Select **Start»All Programs»National Instruments»NI-DAQmx» Text-Based Code Support»NI-DAQmx C Reference Help**.

.NET Languages without NI Application Software

With the Microsoft .NET Framework, you can use NI-DAQmx to create applications using Visual C# and Visual Basic .NET without Measurement Studio. Refer to the *NI-DAQmx Readme* for specific versions supported.

Training Courses

If you need more help getting started developing an application with NI products, NI offers training courses. To enroll in a course or obtain a detailed course outline, refer to ni.com/training.

Technical Support on the Web

For additional support, refer to ni.com/support or ni.com/examples.

Note You can download these documents at ni.com/manuals.

Many DAQ specifications and user guides/manuals are available as PDFs. You must have Adobe Reader 7.0 or later (PDF 1.6 or later) installed to view the PDFs. Refer to the Adobe Systems Incorporated website at www.adobe.com to download Adobe Reader. Refer to the National Instruments Product Manuals Library at ni.com/manuals for updated documentation resources.

B

NI Services

NI provides global services and support as part of our commitment to your success. Take advantage of product services in addition to training and certification programs that meet your needs during each phase of the application life cycle; from planning and development through deployment and ongoing maintenance.

To get started, register your product at ni.com/myproducts.

As a registered NI product user, you are entitled to the following benefits:

- Access to applicable product services.
- Easier product management with an online account.
- Receive critical part notifications, software updates, and service expirations.

Log in to your MyNI user profile to get personalized access to your services.

Services and Resources

- **Maintenance and Hardware Services—**NI helps you identify your systems' accuracy and reliability requirements and provides warranty, sparing, and calibration services to help you maintain accuracy and minimize downtime over the life of your system. Visit ni.com/services for more information.
  - **Warranty and Repair—**All NI hardware features a one-year standard warranty that is extendable up to five years. NI offers repair services performed in a timely manner by highly trained factory technicians using only original parts at a NI service center.
  - **Calibration—**Through regular calibration, you can quantify and improve the measurement performance of an instrument. NI provides state-of-the-art calibration services. If your product supports calibration, you can obtain the calibration certificate for your product at ni.com/calibration.
- **System Integration**—If you have time constraints, limited in-house technical resources, or other project challenges, National Instruments Alliance Partner members can help. To learn more, call your local NI office or visit ni.com/alliance.

- **Training and Certification—**The NI training and certification program is the most effective way to increase application development proficiency and productivity. Visit ni.com/training for more information.
  - The Skills Guide assists you in identifying the proficiency requirements of your current application and gives you options for obtaining those skills consistent with your time and budget constraints and personal learning preferences. Visit ni.com/skills-guide to see these custom paths.
  - NI offers courses in several languages and formats including instructor-led classes at facilities worldwide, courses on-site at your facility, and online courses to serve your individual needs.
- **Technical Support—**Support at ni.com/support includes the following resources:
  - **Self-Help Technical Resources—**Visit ni.com/support for software drivers and updates, a searchable KnowledgeBase, product manuals, step-by-step troubleshooting wizards, thousands of example programs, tutorials, application notes, instrument drivers, and so on. Registered users also receive access to the NI Discussion Forums at ni.com/forums. NI Applications Engineers make sure every question submitted online receives an answer.
  - **Software Support Service Membership—**The Standard Service Program (SSP) is a renewable one-year subscription included with almost every NI software product, including NI Developer Suite. This program entitles members to direct access to NI Applications Engineers through phone and email for one-to-one technical support, as well as exclusive access to online training modules at ni.com/self-paced-training. NI also offers flexible extended contract options that guarantee your SSP benefits are available without interruption for as long as you need them. Visit ni.com/ssp for more information.
- **Declaration of Conformity (DoC)—**A DoC is our claim of compliance with the Council of the European Communities using the manufacturer's declaration of conformity. This system affords the user protection for electromagnetic compatibility (EMC) and product safety. You can obtain the DoC for your product by visiting ni.com/certification.

For information about other technical support options in your area, visit ni.com/services, or contact your local office at ni.com/contact.

You also can visit the Worldwide Offices section of ni.com/niglobal to access the branch office websites, which provide up-to-date contact information, support phone numbers, email addresses, and current events.

Index

Symbols

<20 MHz source mode, 5-39

Numerics

100 kHz Timebase, 6-2
20 MHz Timebase, 6-2
80 MHz source mode, 5-39
80 MHz Timebase, 6-1

A

accessories, 1-14
analog input
  getting started with applications in software, 2-7
  timing signals, 2-1
  triggering, 2-1
analog input signals
  AI Convert Clock behavior, 2-2
  AI Pause Trigger, 2-7
  AI Reference Trigger, 2-5
  AI Sample Clock, 2-2
  AI Sample Clock Timebase, 2-2
  AI Start Trigger, 2-5
analog output
  data generation methods, 3-1
  getting started with applications in software, 3-6
  glitches on the output signal, 3-6
  timing signals, 3-3
  triggering, 3-3
analog output signals
  AO Pause Trigger, 3-5
  AO Sample Clock, 3-3
  AO Sample Clock Timebase, 3-4
  AO Start Trigger, 3-4
ANSI C documentation, A-4
applications
  counter input, 5-3
  counter output, 5-23
  edge counting, 5-3
arm start trigger, 5-37

B

buffered
  edge counting, 5-4
  hardware-timed generations
    analog output, 3-2
    digital output, 4-9
  position measurement, 5-20
  two-signal edge-separation measurement, 5-22

C

C Series module, 1-15
  parallel versus serial DIO, 1-16
  specifications, A-2
C Series module specifications, A-2
cables, 1-14
cascading counters, 5-38
cDAQ chassis
  cables and accessories, 1-14
  cDAQ-9171, 1-1
  cDAQ-9174, 1-2
  cDAQ-9178, 1-2
  desktop use, 1-8
  documentation, A-1
  example programs, A-1
  features, 1-12
  installation and configuration, 1-5
  mounting, 1-7
  unpacking, 1-4
  using, 1-14, 1-15
cDAQ module interface, 1-16
channel Z behavior, 5-19
chassis grounding screw, 1-13
choosing frequency measurement, 5-14
clock routing, 6-1
configuration, 1-5
continuous pulse train generation, 5-26
controlling counting direction, 5-3
counter signals
  Counter *n* A, 5-34
  Counter *n* Aux, 5-34
  Counter *n* B, 5-34

Counter *n* Gate, 5-33
Counter *n* HW Arm, 5-35
Counter *n* Internal Output, 5-36
Counter *n* Source, 5-32
Counter *n* TC, 5-36
Counter *n* Up_Down, 5-35
FREQ OUT, 5-36
Frequency Output, 5-36
counters, 5-1
cascading, 5-38
edge counting, 5-3
generation, 5-23
input applications, 5-3
other features, 5-38
output applications, 5-23
prescaling, 5-38
pulse train generation, 5-24
retriggerable single pulse generation, 5-25
simple pulse generation, 5-23
single pulse generation, 5-23
with start trigger, 5-24
synchronization modes, 5-38
timing signals, 5-32
triggering, 5-37
counting edges, 5-3

D

data
AO generation methods, 3-1
DO generation methods, 4-8
digital I/O
change detection event, 4-7
configuration for NI 9401, 4-13
digital input, 4-2
digital output, 4-8
parallel versus serial DIO modules, 4-1
static DIO, 4-2
digital input
filters (parallel DIO modules only), 4-6
getting started with applications in software, 4-7
timing signals, 4-2
triggering, 4-2
digital input signals
DI Pause Trigger, 4-6
DI Reference Trigger, 4-5
DI Sample Clock, 4-3
DI Sample Clock Timebase, 4-3
DI Start Trigger, 4-4
digital output
data generation methods, 4-8
getting started with applications in software, 4-13
timing signals, 4-10
triggering, 4-10
digital output signals
DO Pause Trigger, 4-11
DO Sample Clock, 4-10
DO Sample Clock Timebase, 4-11
DO Start Trigger, 4-11
digital routing, 6-1
DIN rail mounting, 1-11
documentation, related, A-1

E

edge counting, 5-3
buffered, 5-4
on-demand, 5-3
sample clock, 5-4
single point, 5-3
edge-separation measurement
buffered two-signal, 5-22
single two-signal, 5-21
electromagnetic compatibility guidelines, 1-3
encoders, quadrature, 5-18
encoding
X1, 5-18
X2, 5-19
X4, 5-19
equivalent time sampling, 5-31
example programs, A-1

F

features, 1-12
features, counter, 5-38
filters
  digital input (parallel DIO modules only), 4-6
  PFI, 4-13
FREQ OUT signal, 5-36
frequency
  division, 5-31
  generation, 5-30
  generator, 5-30
  measurement, 5-10
Frequency Output signal, 5-36

G

generations
  analog output data, 3-1
  buffered hardware-timed
    analog output, 3-2
    digital output, 4-9
  continuous pulse train, 5-26
  digital output data, 4-8
  frequency, 5-30
  hardware-timed
    analog output, 3-2
    digital output, 4-9
  pulse for ETS, 5-31
  pulse train, 5-24
  retriggerable single pulse, 5-25
  simple pulse, 5-23
  single pulse, 5-23
  single pulse with start trigger, 5-24
  software-timed analog output, 3-1
getting started
  AI applications in software, 2-7
  AO applications in software, 3-6
  DI applications in software, 4-7
  DO applications in software, 4-13
  with the cDAQ chassis, 1-1

H

hardware-timed generations
  analog output, 3-2
  digital output, 4-9

I

implicit buffered
  pulse-width measurement, 5-6
  semi-period measurement, 5-9
installation, 1-5

L

LabVIEW documentation, A-2
LabVIEW Real-Time documentation, A-2
LabWindows/CVI documentation, A-3
LEDs, 1-12

M

Measurement Studio documentation, A-3
measurements
  buffered two-signal edge-separation, 5-22
  choosing frequency, 5-14
  frequency, 5-10
  implicit buffered pulse-width, 5-6
  implicit buffered semi-period, 5-9
  period, 5-18
  position, 5-18
  pulse-width, 5-5
  semi-period, 5-8
  single pulse-width, 5-5
  single semi-period, 5-9
  single two-signal edge-separation, 5-21
  two-signal edge-separation, 5-21
  using quadrature encoders, 5-18
  using two pulse encoders, 5-20
measuring
  high frequency with two counters, 5-11
  large range of frequencies using two counters, 5-12
  low frequency, 5-10
minimizing glitches on the output signal, 3-6
mounting, 1-7
  desktop use, 1-8
  DIN rail, 1-11
  panel, 1-9

N

.NET languages documentation, A-4
NI-DAQmx
    device documentation browser, A-2
    documentation, A-2

O

on-demand edge counting, 5-3
output signals, minimizing glitches, 3-6

P

panel mounting, 1-9
pause trigger, 5-37
period measurement, 5-18
PFI, 4-13
    BNC connectors, 1-13
    filters, 4-13
position measurement, 5-18
    buffered, 5-20
power connector, 1-13
prescaling, 5-38
pulse
    encoders, 5-20
    generation for ETS, 5-31
    train generation, 5-24
        continuous, 5-26
pulse-width measurement, 5-5
    implicit buffered, 5-6
    single, 5-5

Q

quadrature encoders, 5-18

R

reciprocal frequency measurement, 5-12
related documentation, A-1
retriggerable single pulse generation, 5-25
routing
    clock, 6-1
    digital, 6-1

S

safety guidelines, 1-3
    for hazardous voltages, 1-3
sample clock measurement, 5-20
sample clock, edge counting, 5-4
semi-period measurement, 5-8
    implicit buffered, 5-9
    single, 5-9
simple pulse generation, 5-23
single
    point edge counting, 5-3
    pulse generation, 5-23
        retriggerable, 5-25
        with start trigger, 5-24
    pulse-width measurement, 5-5
    semi-period measurement, 5-9
    two-signal edge-separation
      measurement, 5-21
software-timed generations
    analog output, 3-1
start trigger, 5-37
status LEDs, 1-12
STC3, 1-16
strain relief, 1-13
synchronization modes, 5-38
    100 MHz source, 5-39
    external source less than 40 MHz, 5-39
    internal source less than 40 MHz, 5-39

T

technical support, A-4
timebase
    100 kHz, 6-2
    20 MHz, 6-2
    80 MHz, 6-1
training, A-4
TRIG (PFI) BNC connectors, 1-13
trigger
    arm start, 5-37
    pause, 5-37
    start, 5-37

two-signal edge-separation
measurement, 5-21
buffered, 5-22
single, 5-21

U

unpacking, 1-4
USB cable strain relief, 1-13
using the cDAQ chassis, 1-15

X

X1 encoding, 5-18
X2 encoding, 5-19
X4 encoding, 5-19