CUSTOMER TERMINAL	RoHS	LEAD(Pb)−FREE
Sn96%, Ag4%	Yes	Yes

more than you expect

Midcom

WÜRTH ELEKTRONIK

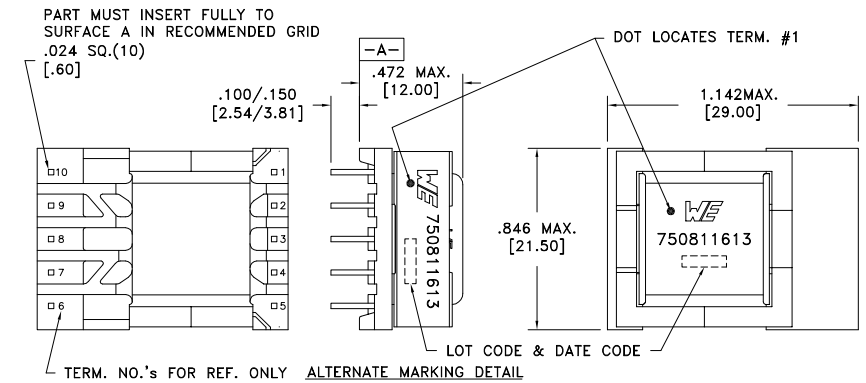

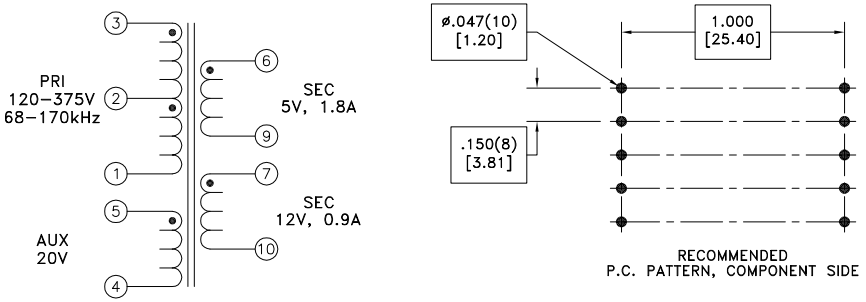

ELECTRICAL SPECIFICATIONS @ 25°C unless otherwise noted:

PARAMETER		TEST CONDITIONS	VALUE
D.C. RESISTANCE	1−3	@20°C	1.279 ohms ±10%
D.C. RESISTANCE	4−5	@20°C	0.229 ohms ±10%
D.C. RESISTANCE	6−9	@20°C	0.009 ohms max.
D.C. RESISTANCE	7−10	@20°C	0.037 ohms ±20%
INDUCTANCE	1−3	10kHz, 100mVAC, Ls	800uH ±10%
SATURATION CURRENT		20% rolloff from initial	1.4A
LEAKAGE INDUCTANCE	1−3	tie(4+5, 6+7+9+10), 100kHz, 100mVAC, Ls	10uH typ., 15uH max.
DIELECTRIC	1−10	tie(3+4, 6+7), 4500VAC, 1 second	4500VAC, 1 minute
DIELECTRIC	1−5	625VAC, 1 second	500VAC, 1 minute
TURNS RATIO		(2−1):(3−2)	1:1, ±1%
TURNS RATIO		(3−1):(6−9)	25:1, ±1%
TURNS RATIO		(3−1):(7−10)	11.11:1, ±1%
TURNS RATIO		(3−1):(5−4)	6.666:1, ±1%

GENERAL SPECIFICATIONS:
OPERATING TEMPERATURE RANGE: −40°C to +125°C including temp rise.

Designed to comply with the following requirements as defined by IEC61558−2−16:
− Reinforced insulation for a primary circuit at a working voltage of 400VDC.

Wire insulation & RoHS status not affected by wire color.
Wire insulation color may vary depending on availability.

REV.	DATE
6A	7/13

Packaging Specifications
Method: Tray
PKG−0935
www.we−online.com/midcom
SEE REVISION SHEET FOR REVISION LEVEL

CONVENTION PLACEMENT

Tolerances unless otherwise specified:
Angles: ±1° Decimals: ±.005 [.13]
Fractions: ±1/64 Footprint: ±.001 [.03]
This drawing is dual dimensioned. Dimensions in brackets are in millimeters.

DRAWING TITLE
TRANSFORMER
eiSos p/n: 750811613

compliant RoHS

PART NO.
750811613
SPECIFICATION SHEET 1 OF 1