CUSTOMER TERMINAL	RoHS	LEAD(Pb)–FREE
Sn96%, Ag4%	Yes	Yes

more than you expect

Midcom

WÜRTH ELEKTRONIK

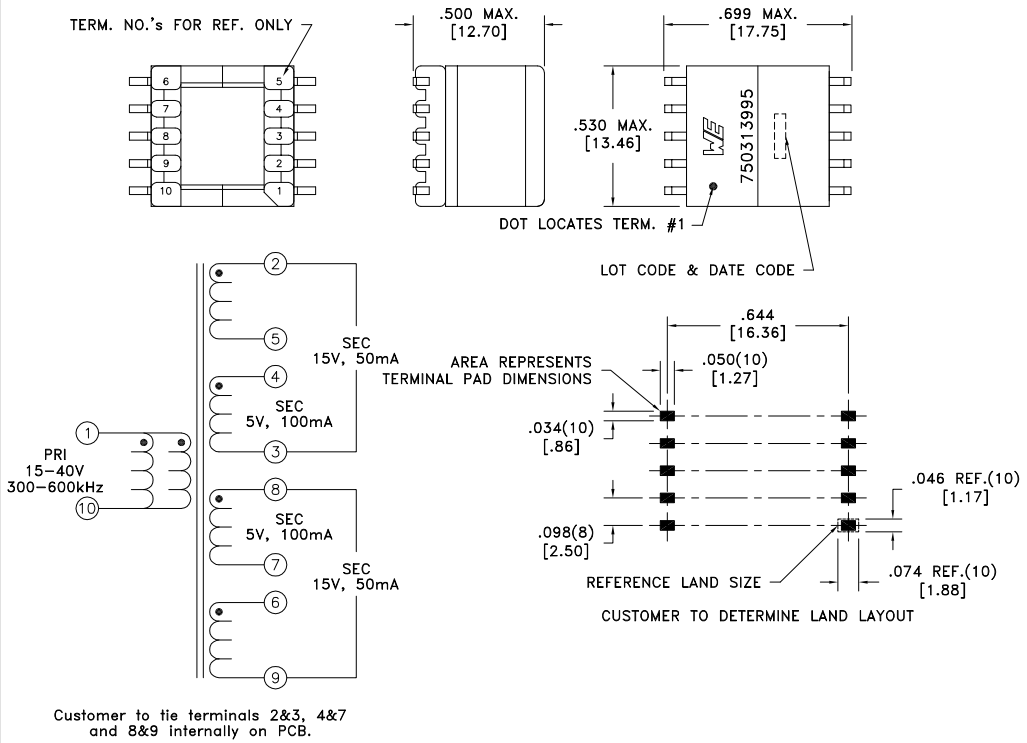

Customer to tie terminals 2&3, 4&7 and 8&9 internally on PCB.

ELECTRICAL SPECIFICATIONS @ 25°C unless otherwise noted:

PARAMETER		TEST CONDITIONS	VALUE
D.C. RESISTANCE	1–10	@20°C	0.110 ohms ±10%
D.C. RESISTANCE	4–3	@20°C	0.150 ohms ±10%
D.C. RESISTANCE	8–7	@20°C	0.150 ohms ±10%
D.C. RESISTANCE	4–5	tie(2+3), @20°C	0.800 ohms ±10%
D.C. RESISTANCE	6–7	tie(8+9), @20°C	0.800 ohms ±10%
INDUCTANCE	1–10	10kHz, 100mVAC, Ls	50.0uH ±10%
SATURATION CURRENT		20% rolloff from initial	1.5A
LEAKAGE INDUCTANCE	1–10	tie(2+3+4+5+6+7+8+9), 100kHz, 100mVAC, Ls	130nH typ., 260nH max.
DIELECTRIC	1–2	tie(4+5+6+7), 1500VAC, 1 second	–
TURNS RATIO		(1–10):(4–3)	1.5:1, ±1%
TURNS RATIO		(1–10):(8–7)	1.5:1, ±1%
TURNS RATIO		(6–7):(1–10), tie(8+9)	2:1, ±1%
TURNS RATIO		(4–5):(1–10), tie(2+3)	2:1, ±1%

GENERAL SPECIFICATIONS:

OPERATING TEMPERATURE RANGE: –40°C to +125°C including temp rise.

Wire insulation & RoHS status not affected by wire color.
Wire insulation color may vary depending on availability.

REV.	DATE
6A	8/13

Packaging Specifications
Method: Tape & Reel
PKG–0499
www.we–online.com/midcom

CONVENTION PLACEMENT

SEE REVISION SHEET FOR REVISION LEVEL

Tolerances unless otherwise specified:
Angles: ±1° Decimals: ±.005 [.13]
Fractions: ±1/64 Footprint: ±.005 [.13]

This drawing is dual dimensioned. Dimensions in brackets are in millimeters.

DRAWING TITLE
TRANSFORMER

eiSos p/n: 750313995

compliant RoHS

PART NO.
750313995

SPECIFICATION SHEET 1 OF 1

Mouser Electronics

Authorized Distributor

Click to View Pricing, Inventory, Delivery & Lifecycle Information:

Wurth Electronics:

750313995