General Purpose Cases

APPLICATIONS

The range consists of three types and a hand held control version.
Type 1, which is the smallest size, is available in either black or white and is supplied in a box containing mouldings for 10 enclosures. Types II and III are supplied in black, in single kits.
The hand held housing is ergonomically designed to be comfortably held in the hand. The housing is ideal for remote control applications and is supplied as a pack comprising mouldings and fixing screws for 10 boxes.

CONSTRUCTION

Case types II and III have a continuous lip moulded into the lid and base which provides a protection seal against the intrusion of tools, pins, wire or other such implements. The internal surfaces are free of protrusions and are therefore ideally suited to utilize the PCB mounting accessories featured on page 29.

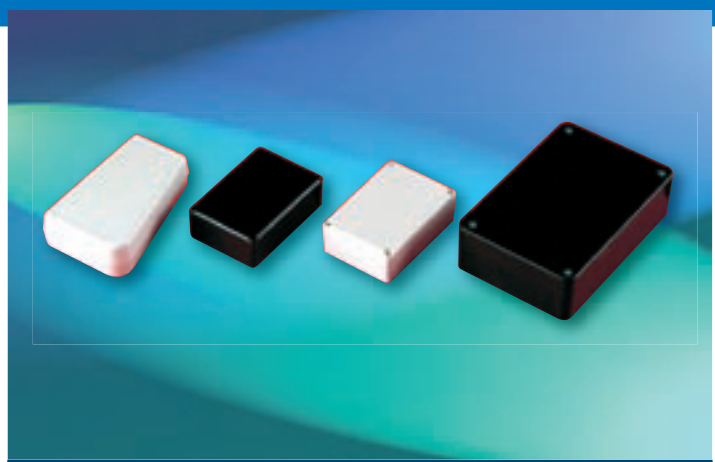

General purpose cases

Contents of kit

Description	Material/Finish
Mouldings	ABS, black or white
Flame class rating	Non flame retardant
Temp. range	-40°C to +80°C

DIMENSIONAL DETAILS

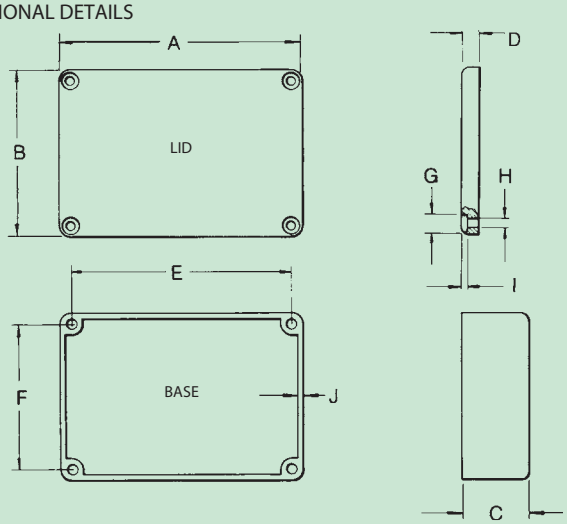

HAND HELD CONTROL BOX

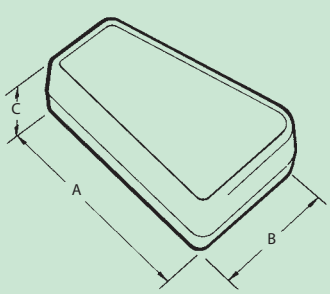

Ordering information

Type	Colour	Dimensions										Order code
		A	B	C	D	E	F	G	H	I	J	
I*	Black	72	50	20	5	65,5	43,5	5,8	3,2	1,6	1,6	75-1413
1*	White	72	50	20	5	65,5	43,5	5,8	3,2	1,6	1,6	75-1469
II	Black	120	80	30	6,5	106	66	6,5	3,5	2,5	2,0	75-2860
III	Black	180	110	49	7,5	164	94	6,5	3,5	2,5	2,5	75-2861

*Note: Supplied in a pack of mouldings for 10 boxes

HAND HELD CONTROL BOX

Ordering information

Description	Qty	Dimensions			Order code
		A	B	C	
Hand held boxes	10	94.0	61.0	27.1	75-1799