TENMA®

# 72-7228

## Operating Manual



## Digital Clamp Multimeter

P/N: 110401100913

TENMA®

# Model 72-7228
# OPERATING MANUAL

## Table of Contents


| Title | Page |
|---|---|
| Overview | 4 |
| Inspection | 5 |
| Safety Information | 6 |
| Rules For Safe Operation | 7 |
| International Electrical Symbols | 10 |
| The Meter Structure | 11 |
| Functional Buttons | 12 |
| The Effectiveness of Functional Buttons | 14 |
| Display Symbols | 15 |
| Measurement Operation | 18 |
| A. DC/AC Voltage Measurement | 18 |
| B. Measuring Resistance | 20 |
| C. Testing Diodes | 22 |
| D. Testing for Continuity | 24 |
| E. Frequency Measurement | 26 |
| F. Duty Cycle Measurement | 28 |

| Title | Page |
|---|---|
| G. DC Current Measurement | 30 |
| H. AC Current Measurement | 32 |
| Sleep Mode | 37 |
| Specifications | 38 |
| A. General Specifications | 38 |
| B. Environmental Requirements | 39 |
| Accuracy Specifications | 40 |
| A. DC Voltage | 40 |
| B. AC Voltage | 41 |
| C. Resistance | 42 |
| D. Diode Test | 42 |
| E. Continuity Test | 43 |
| F. Frequency | 44 |
| G. Duty Cycle | 45 |
| H. DC Current | 45 |

**Title** **Page**

I. AC Current ---- 47
Maintenance ---- 49
A. General Service ---- 49
B. Replacing the Battery ---- 50

## Overview

This Operating Manual covers information on safety and cautions. Please read the relevant information carefully and observe all the **Warnings** and **Notes** strictly.

### ⚠ Warning

**To avoid electric shock or personal injury, read the "Safety Information" and "Rules for Safe Operation" carefully before using the Meter.**

Digital Clamp Multimeter **Model 72-7228** (hereafter referred to as "the Meter") features 3 5/6 digits and a 6666 count display. It uses large scale integrated circuit with double integrated A/D converter as its core and has full range overload protection.

The Meter will measure AC/DC voltage, AC/DC current, frequency, duty cycle, resistance, diodes, continuity and surge current.

## Inspection

Open the package case and take out the Meter. Carefully check the following items for missing or damaged parts:

| Item | Description | Qty |
|---|---|---|
| 1 | Operating manual | 1 piece |
| 2 | Test Lead | 1 pair |
| 3 | Carry case | 1 piece |
| 4 | 9V Battery (NEDA1604A or 6LF22) | 1 piece |

In the event items are missing or damaged, contact your dealer immediately.

## Safety Information

This Meter complies with the standards IEC61010-1; IEC61010-2-032: in pollution degree 2, overvoltage category (CAT. II 600V, CAT. III 300V) and double insulation.

CAT. II: Local level, appliance, PORTABLE EQUIPMENT etc., with smaller transient overvoltages than CAT. III.
CAT. III: Distribution level, fixed installation, with smaller transient overvoltages than CAT. IV

Use the Meter only as specified in this operating manual, otherwise the protection provided by the Meter may be impaired.

In this manual, a **Warning** identifies conditions and actions that pose hazards to the user, or may damage the Meter or the equipment under test.

A **Note** identifies the information that user should pay attention to.

International electrical symbols used on the Meter and in this Operating Manual are explained on page 10.

## Rules For Safe Operation

### ⚠ Warning

**To avoid possible electric shock or personal injury, and to avoid possible damage to the Meter or to the equipment under test, adhere to the following rules:**

- **Before using the Meter inspect the case. Do not use the Meter if it is damaged or the case (or part of the case) is removed. Look for cracks or missing plastic. Pay attention to the insulation around the connectors.**
- **Inspect the test leads for damaged insulation or exposed metal. Check the test leads for continuity. Replace damaged test leads with identical model number or electrical specifications before using the Meter.**
- **Do not apply more that the rated voltage, as marked on the Meter , between the terminals or between any terminal and ground. If the value to be measured is unknown, use the maximum measurement position and reduce the range step by step until a satisfactory reading is obtained.**
- **When measurement has been completed, disconnect the connection between the test leads and the circuit under test, remove the testing leads from**

**the input terminals of the Meter and turn the Meter power off.**

- **Ensure the rotary switch is in the correct position prior to measurement. To prevent damage to the meter, range or mode changes should not be made during measurement.**
- **Do not perform measurements when the Meter's back case and battery compartment are not closed to avoid electric shock.**
  **Do not input higher than 600V between the two Meter's input terminal to avoid electric shock and damage to the meter, do not input higher than 600V between the Meter's two input terminals.**
- **When working with effective voltages over 70VDC or 33VAC RMS, special care should be taken for there is danger of electric shock.**
- **Use the proper terminals, function, and range for your measurements.**
- **Do not use or store the Meter in an environment of high temperature, humidity, explosive, inflammable and strong magnetic field. The performance of the Meter may deteriorate after dampened.**
- **When using the test leads, keep your fingers behind the finger guards.**
- **To avoid electric shock, do not touch the bare wires, connectors, unused input terminals or the circuit under testing during measurement.**
- **Disconnect circuit power and discharge all high-voltage capacitors before testing resistance, continuity and diode.**

- **Replace the battery as soon as the battery indicator appears. With a low battery, the Meter might produce false readings that can lead to electric shock and personal injury.**
- **When servicing the Meter, use only the same model number or identical electrical specifications replacement parts.**
- **The internal circuit of the Meter shall not be altered at will to avoid damage of the Meter and any accident.**
- **Soft cloth and mild detergent should be used to clean the surface of the Meter when servicing. No abrasive and solvent should be used to prevent the surface of the Meter from corrosion, damage and accident.**
- **The Meter is suitable for indoor use only.**
- **Turn the Meter off when it is not in use and remove the battery if the meter is not to be used for a long time.**
- **Check the battery often as it may leak after some time. If leaking appears, replace the battery immediately. A leaking battery will damage the Meter.**

## International Electrical Symbols

| | |
|---|---|
| ~ | AC (Alternating Current) |
| ⎓ | DC (Direct Current) |
| ≂ | AC or DC |
| ⏚ | Ground |
| ⧈ | Double Insulated |
| ⚠ | Warning. Refer to the Operating Manual |
| | Low Battery |
| •))) | Continuity Test |
| ⊳\| | Diode |
| ⚡ | Danger of High Voltage |
| CE | Conforms to Standards of European Union |

## The Meter Structure (see figure 1)

1. Hand Guards: to protect user's hand from touching the dangerous area.
2. Trigger: press the lever to open the transformer jaws. When the pressure on the lever is released, the jaws will close.
3. Functional Buttons
4. Input Terminals
5. LCD Display
6. Rotary Switch
7. Transformer Jaw: designed to pick up the AC and DC current flowing through the conductor. For proper current transfer and accuracy, the conductor should pass perpendicular to the plane of the jaw.

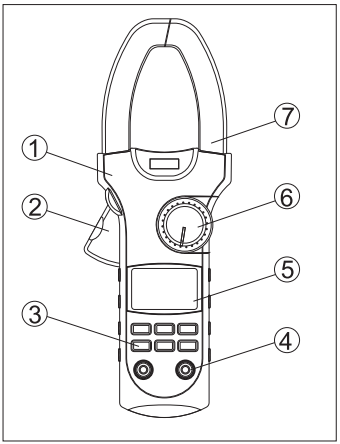


Figure 1

## Functional Buttons

The following table provides information about the operation of functional buttons.

| Button | Operation Performed |
|---|---|
| **MAX/MIN** | Starts recording of maximum and minimum values.<br>Press to step the display through high (MAX) and low (MIN) readings at any mode.<br>● Press and hold for one second to exit MAX/MIN mode. |
|  | ● Press again to turn the display backlight off, otherwise it will turn off automatically after 1 minute. |
| **HOLD** | ● Press **HOLD** to enter the Hold mode. The Meter will beep.<br>● Press **HOLD** again to exit the Hold mode to return to measurement mode, the Meter will beep.<br>● You may also turn the rotary switch or press **SELECT** button to exit the Hold mode. |

| Button | Operation Performed |
|---|---|
| **HOLD** | ● Press **HOLD** button for 2 seconds when turning on the Meter to display full icon. |
| **Hz** | When the Meter is at %Hz, **V** ⎓ and A ∼, press **Hz** to measure frequency and duty cycle. |
| **ZERO** | Press **ZERO** to zero the display before measuring DC current. |

## Functional Buttons

Not every functional buttons may be used on every rotary switch position. The following table describes which buttons may be used on which rotary switch positions.

| Rotary Switch Positions | Functional Buttons | | | | | |
|---|---|---|---|---|---|---|
| | SELECT | MAX/MIN | ☼ | HOLD | Hz | ZERO |
| V≂ | ● | ● | ● | ● | ● | N/A |
| •))) → Ω | ● | ● | ● | ● | N/A | N/A |
| %Hz | N/A | ● | ● | ● | ● | N/A |
| 66A⎓ | N/A | ● | ● | ● | N/A | ● |
| 1000A⎓ | N/A | ● | ● | ● | N/A | ● |
| 66A ~ | ● | ● | ● | ● | ● | N/A |
| 1000A ~ | ● | ● | ● | ● | ● | N/A |
| °C °F | ● | ● | ● | ● | N/A | N/A |

## Display Symbols (see figure 2)

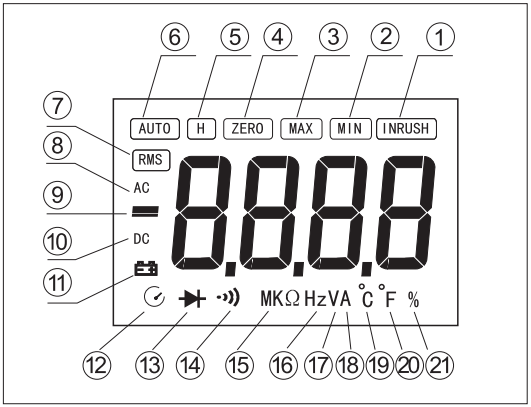


Figure 2

| Number | Symbol | Meaning |
|---|---|---|
| 1 | **INRUSH** | Indicator for Surge current |
| 2 | **MIN** | Minimum reading displayed |
| 3 | **MAX** | Maximum reading displayed |
| 4 | **ZERO** | Indicator for zeroing |
| 5 | **H** | Data hold is active |
| 6 | **AUTO** | The Meter is in the auto range mode in which the Meter automatically selects the range with the best resolution. |
| 7 | **RMS** | True RMS indicator |
| 8 | **AC** | Indicator for AC voltage or current |
| 9 | ▬ | Indicates negative reading |
| 10 | **DC** | Indicator for DC voltage |
| 11 |  | The battery is low.<br>⚠ **Warning: To avoid false readings, which could lead to possible electric shock or personal injury, replace the battery as soon as the battery indicator appears.** |

| Number | Symbol | Meaning |
|---|---|---|
| 12 | | Sleep mode is on |
| 13 | | Diode test |
| 14 | | The continuity buzzer is on |
| 15 | Ω,KΩ,MΩ | Ω: Ohm. The unit of resistance.<br>kΩ:Kilohm. $1x10^3$ or 1000 ohms<br>MΩ:Megohm. $1x10^6$ or 1,000,000 ohms |
| 16 | **Hz, kHz, MHz** | Hz: Hertz. The unit of frequency.<br>KHz: Kilohertz. $1x10^3$ or 1000 hertz.<br>MHz: Meghertz. $1x10^6$ or1,000,000 hertz. |
| 17 | **mV, V** | Volts. The unit of voltage.<br>mV: Millivolt. $1x10^{-3}$ or 0.001 volts |
| 18 | **A** | Amperes (amps). The unit of current. |
| 19 | °C | The unit of temperature:<br>°C**:** Centigrade temperature |
| 20 | °F | The unit of temperature:<br>°F**:** Fahrenheit temperature |
| 21 | **%** | Duty cycle measurement |

## Measurement Operation

**A. DC/AC Voltage Measurement** (see figure 3)

**⚠ Warning**

**To avoid personal injury or damage to the Meter from eletric shock, do not attempt to measure voltages higher than 600V AC/DC, although readings may be obtained.**

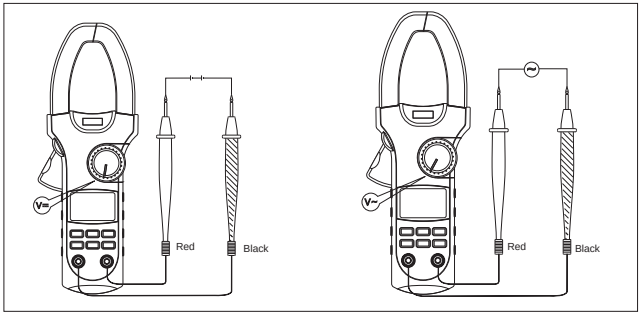


Figure 3

The DC Voltage ranges are: 6.6V, 66V and 600V

The AC Voltage ranges are: 6.6V, 66V and 600V

To measure DC/AC voltages, connect the Meter as follows:

1. Insert the red test lead into the **VΩHz** terminal and black test lead into the **COM** terminal.
2. Set the rotary switch to **V ⎓.** DC mesaurement mode and auto ranging is a default. Press **SELECT** to switch to AC measurement mode.
3. Press **Hz** button to measure frequency or duty cycle, but the frequency or duty cycle readings obtained from this range are only for reference.
4. Connect the test leads across with the object being measured.
   The measured value shows on the display.

**Note**

- When DC/AC voltage measurement has been completed, disconnect the connection between the test leads and the circuit under test and remove test leads from the input terminals.

**B. Measuring Resistance** (see figure 4)

## ⚠ Warning

**To avoid damage to the Meter or to the devices under test, disconnect circuit power and discharge all the high-voltage capacitors before measuring resistance.**

The resistance ranges are:
660Ω, 6.6kΩ, 66kΩ, 660kΩ, 6.6MΩ and 66MΩ

To measure resistance, connect the Meter as follows:

1. Insert the red test lead into the **VΩHz** terminal and black test lead into the **COM** terminal.
2. Set the rotary switch to •))) ⊣◁⊢ Ω. Resistance measurement is a default or press **SELECT** to switch to Ω measurement mode.

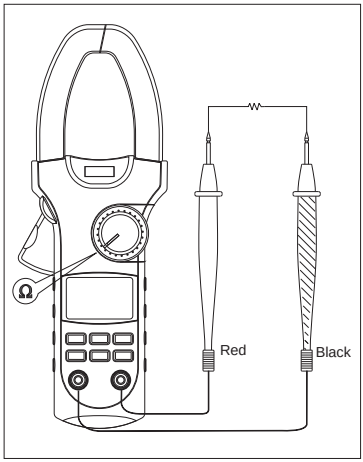


Figure 4

3. Connect the test leads across with the object being measured.
   The measured value shows on the display.

**Note**

- To obtain a more precise reading, you could remove the objects being tested from the circuit when measuring.
- When resistance measurement has been completed, disconnect the connection between the test leads and the circuit under test and remove test leads from the input terminals.

**C. Testing Diodes** (see figure 5)

⚠ **Warning**

**To avoid damage to the Meter or to the devices under test, disconnect circuit power and discharge all the high-voltage capacitors before testing diodes.**

Use the diode test to check diodes, transistors, and other semiconductor devices. The diode test sends a current through the semicondutor junction, then measures the voltage drop across the junction. A good silicon junction drops between 0.5V and 0.8V.

To test the diode out of a circuit, connect the Meter as follows:

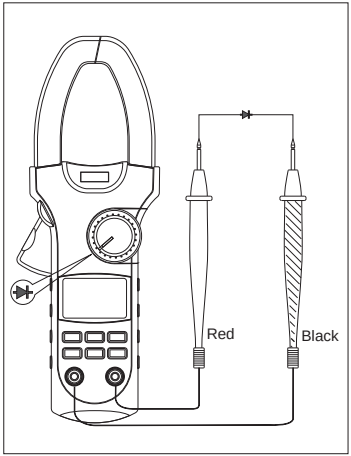


Figure 5

1. Insert the red test lead into the **VΩHz** terminal and black test lead into the **COM** terminal.
2. Set the rotary switch to •))) ⊣⊢ Ω. Press **SELECT** to switch to ⊣⊢ measurement mode.
3. For forward voltage drop readings on any semiconductor component, place the red test lead on the component's anode and place the black test lead on the component's cathode.

**Note**

- To obtain a more precise reading, you should remove the objects being tested from the circuit when measuring.
- When diode testing has been completed, disconnect the test leads from the circuit under test and remove the test leads from the input terminals.

**D. Testing for Continuity** (see figure 6)

⚠ **Warning**

**To avoid damage to the Meter or to the devices under test, disconnect circuit power and discharge all the high-voltage capacitors before measuring continuity.**

To test for continuity, connect the Meter as follows:

1. Insert the red test lead into the **VΩHz** terminal and the black test lead into the **COM** terminal.
2. Set the rotary switch to •)) ⊣⊢ Ω and press **SELECT** button to select •)) measurement mode.
3. The buzzer sounds if the resistance of a circuit under test is less than 30Ω.
4. The buzzer may or may not sound if the resistance of a circuit under test is between 30Ω to 100Ω.
5. The buzzer does not sound if the resistance of

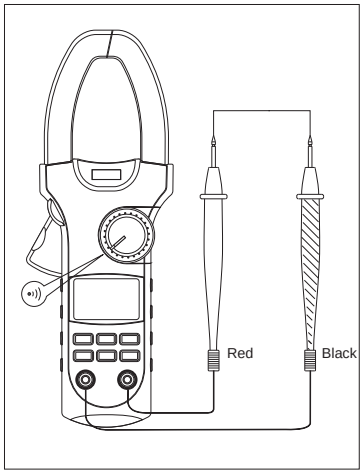


Figure 6

a circuit under test is higher than 100Ω.

**Note**

- When continuity testing has been completed, disconnect the test leads from the circuit under test and remove the test leads from the input terminals.

**E. Frequency Measurement** (see figure 7)

⚠ **Warning**

**Personal injury or damage to the Meter from eletric shock, do not attempt to measure voltages higher than 600V AC/DC, although readings may be obtained.**

The frequency ranges are:
660Hz, 6.6kHz, 66kHz, 660kHz, 6.6MHz and 66MHz.

To measure frequency, connect the Meter as follows:

1. Insert the red test lead into the **VΩHz** terminal and the black test lead into the **COM** terminal.
2. Set the rotary switch to **%Hz**. Frequency measurement mode is a default or press **SELECT** to switch to **Hz** measurement mode.
3. Connect the test leads across with the object

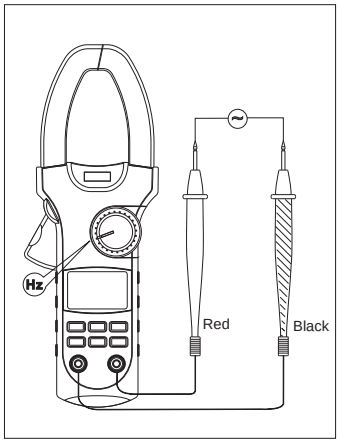


Figure 7

being measured.
The measured value shows on the display.

**Note**

- When frequency measurement has been completed, disconnect the test leads from the circuit under test and remove the test leads from the input terminals.

**F. Duty Cycle Measurement** (see figure 8)

⚠ **Warning**

**Personal injury or damage to the Meter from eletric shock, do not attempt to measure voltages higher than 600V AC/DC, although readings may be obtained.**

The duty cycle range is: 0.1%~99.9%.

To measure duty cycle, connect the Meter as follows:

1. Insert the red test lead into the **VΩHz** terminal and the black test lead into the **COM** terminal.
2. Set the rotary switch to **%Hz**. Press **SELECT** to switch to **%** measurement mode.
3. Connect the test leads across with the object being measured.
   The measured value shows on the display.

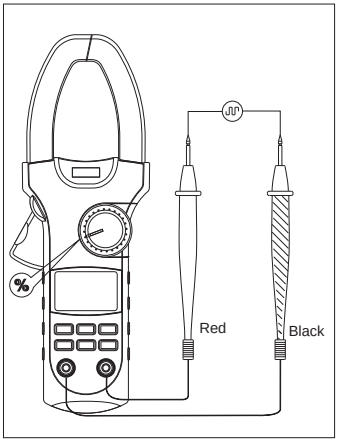


Figure 8

**Note**

- When duty cycle measurement has been completed,disconnect the test leads from the circuit under test and remove the test leads from the input terminals.

**G. DC Current Measurement** (see figure 9)

The measurement ranges of current are: 66A ⎓ and 1000A ⎓.

To measure current, do the following:

1. Set the rotary switch to 66A ⎓ or 1000A ⎓.
2. Hold the Meter firmly and steadily. Internal components are very sensitive to movement or physical shock as this will effect readings. It is also very sensitive to heat and magnetic fields.
3. Press the lever to open the transformer jaw.
4. Center the conductor within the transformer jaw, then release the Meter slowly until the trasnformer jaw is completely closed, Make sure the conductor to be tested remians placed at the center of the transformer ,The Meter can only measure one conductor at a time.

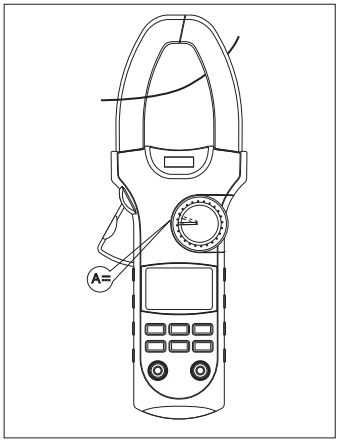

Figure 9

**Note**

- If the Meter does not display 00.00 when it is at 66A ⎓ range, press **ZERO** to zeroing. After zeroing, it allows 10 digits bouncing reading.
- While in the 66A range, if the meter does not display 00.00, press **ZERO** to zero the meter.the meter should display 0, and the ZERO button is inoperative.
- When current measurement has been completed, press the jaw lever to open the jaw,and remove the conductor away from the transformer jaw of the Meter.

**H. AC Current Measurement** (see figure 10)

## ⚠ Warning

The measurement ranges of current are: 66.00A ~ and 1000A ~.
To measure AC current, do the following:

1. Set the rotary switch to 66A ~ or 1000A ~.
2. Hold the Meter firmly and steadily. Internal components are very sensitive to movement or physical shock as this will effect readings. It is also very sensitive to heat and magnetic fields.
3. Press the lever to open the transformer jaw.
4. Center the conductor within the transformer jaw, then release the Meter slowly until the trasnformer jaw is completely closed, Make sure the conductor to be tested remains placed at the center of the

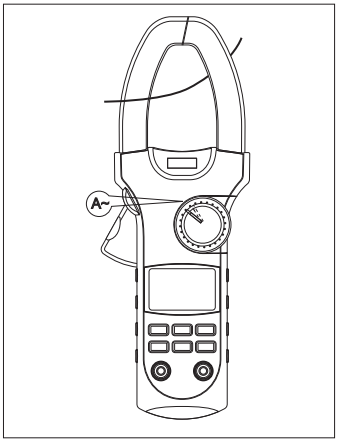


Figure 10

transformer jaw, The Meter can only measure one conductor at a time.

5. When the measuring current >1A, press **Hz** button to step through AC current, frequency and duty cycle measurement mode. But the frequency or duty cycle readings obtained from this range is only for reference.
6. Press **SELECT** to carry out surge current measurement.

To measure surge current Measurement, do the following:

1. Set the rotary switch to 1000A ~.
2. Press **SELECT** when the Meter displays the minimum readings. The Meter then displays "-----'' indicating it is ready to carry out surge current measurement.
3. Turn on the electrical equipments at that time to measure the moment start up current.
4. Turn on the electrical equipment at this time to measure the momentary start up current.
5. When the Meter is at surge current measurement, it is locked to the highest measurement range.

**Note**

- When current measurement has been completed, press the button to open the jaw, and remove the conductor away from the transformer jaw of the Meter.

## Sleep Mode

To preserve battery life, the Meter automatically turns off after 15 minutes of inactivity.

The Meter beeps 3 times one minute before entering Sleep Mode and one long beep just before entering Sleep Mode.

The Meter can be activated by turning the rotary switch or pressing the button based on ‘‘**The Effectiveness of Functional Buttons**’’ on page 14

If the Meter is activated by pressing button, the Meter will keep the measurement value before entering Sleep Mode.

To disable the Sleep Mode feature, press **MAX/MIN, LIGHT** or **Hz** buttons while turning on the meter.

## Specifications

### A. General Specifications:

- Maximum Voltage between any Terminals and ground: Refer to different range input protection voltage.
- Display: 3 5/6 digits LCD display, Maximum display 6666.
- Polarity: Auto
- Overloading: Display **OL** or **–OL**.
- Low Battery: Display .
- Sampling: 3 times per second.
- Measurement Deviation: The conductor being meaured is not placed in the center of the jaw during AC/DC current measurement, it will cause extra ±1% deviation based on the stated accuracy.
- Drop Test: 1 meter drop test passed.
- Max. Jaw Size: 55mm diameter.
- Projected Max. Current conductor size: 45mm diameter.
- Power: 1 x 9V battery (6LF22 1604A)

- Battery Life: typically 150 hours (alkaline battery)
- Dimensions: 285.3mm x 105mm x 44.5mm
- Weight: Approximate 533g (battery included)

**B. Environmental Requirements**

- The Meter is suitable for indoor use.
- Altitude: Operating: 2000m
  Storage: 10000m
- Safety/ Compliances: IEC61010-1; IEC61010-2-032. CAT.II 600V, CAT.III 300V over voltage and double insulation standard, pollution degree 2.
- Temperature and humidity:
  - Operating:
    0°C~30°C (≤80%R.H)
    30°C~40°C (≤75%R.H)
    40°C~50°C (≤45%R.H)
  - Storage:
    -20°C~+60°C (≤80%R.H)

## Accuracy Specifications

Accuracy: ± (a% reading + b digits), guarantee for 1 year.
Operating temperature: 23°C ± 5°C
Relative humidity: ≤80%R.H
Temperature coefficient: 0.1x(specified accuracy)/1°C

**A. DC Voltage**

| Range | Resolution | Accuracy | Overload protection |
|---|---|---|---|
| 6.600V | 1mV | ± (0.8%+1) | 600V DC/AC |
| 66.00V | 10mV | | |
| 600.0V | 100mV | | |

Remark: Input Impedance: 10MΩ

**B. AC Voltage**

| Range | Resolution | Accuracy | Overload protection |
|---|---|---|---|
| 6.600V | 1mV | ± (1.2%+5) | 600V DC/AC |
| 66.00V | 10mV | | |
| 600.0V | 100mV | | |

Remarks:

- Input Impedance: 10MΩ
- Frequency Response: 40Hz~400Hz
- Change to AC:
  Combine AC and True RMS response method. Input sine wave to adjust. Non sine wave signals must be adjusted based on the following data:

  Peak factor: 1.4~2.0, add 1.0% to the stated accuracy
  Peak factor: 2.0~2.5, add 2.5% to the stated accuracy
  Peak factor: 2.5~3.0, add 4.0% to the stated accuracy.

**C. Resistance**

| Range | Resolution | Accuracy | Overload protection |
|---|---|---|---|
| 660.0Ω | 0.1Ω | ± (1.2%+2) | 250VAC |
| 6.600kΩ | 1Ω | ± (1%+2) | |
| 66.00kΩ | 10Ω | | |
| 660.0kΩ | 100Ω | | |
| 6.600MΩ | 1kΩ | ± (1.2%+2) | |
| 66.00MΩ | 10kΩ | ± (1.5%+2) | |

**D. Diode Test**

| Range | Resolution | Accuracy | Overload protection |
|---|---|---|---|
|  | 1mV | 0.5V~0.8V (Open circuit voltage approx. 3.0V) | 250VAC |

## E. Continuity Test

| Range | Resolution | Accuracy | Overload protection |
|---|---|---|---|
| •)) | 0.1Ω | Around ≤30Ω,the buzzer will sound. (Open circuit voltage approx. –1.2V) | 250VAC |

Remark:

- The buzzer may or may not sound when the resistance of a circuit under test is between 30Ω~100Ω.
- The buzzer will not sound when the resistance of a circuit under test is > 100Ω

**F. Frequency**

| Range | Resolution | Accuracy | Overload protection |
|---|---|---|---|
| 660.0Hz | 0.1Hz | ± (0.1%+3) | 250VAC |
| 6.600kHz | 0.001kHz | | |
| 66.00kHz | 0.01kHz | | |
| 660.0kHz | 0.1kHz | | |
| 6.600MHz | 0.001MHz | | |
| 66.00MHz | 0.01MHz | | |

Remarks:
Input Sensitivity (a) as follows:
When a ⩽10Hz: the Meter does not respond
When 10Hz < a ⩽100kHz: ⩾300mV rms
When a >100kHz: ⩾600mV rms

### G. Duty Cycle

| Range | Resolution | Accuracy | Overload protection |
|---|---|---|---|
| 0.1%~99.9% | 0.1% | For reference only | 250VAC |

### H. DC Current

| Range | Resolution | Accuracy | Overload protection |
|---|---|---|---|
| 66.00A | 0.01A | ± (1.5%+12) | 1000A DC/AC |
| 1000A | 1A | ± (1.5%+8) | |

### ⚠ Warning

**The operating temperature must be 0°C ~ 40°C when measuring current.**

**Remarks:**

- If the current flow is from the back of the meter to the front, the reading will be positive. The opposite direction will provide a negative reading. The internal components are very sensitive to magnetic fields and physical force and shock. It is important to hold the Meter firmly and steadily while taking measurements. The following procedure will provide the most precise readings:

  1. Turn off the current of tested conductor.
  2. Hold the Meter tight and press the lever to open the transformer jaw. Center the conductor within the transformer jaws, then release the Meter slowly until the transformer jaw is completely closed. Make sure the conductor to be tested is placed at the center of the transformer jaw, otherwise it will cause +1.0% deviation based on the stated accuracy.
  3. Press **ZERO** button **to** display zero.
  4. Turn on the current of tested conductor reading the stable value of clamp meter.
  5. The obtained reading will be more precise.

## I. AC Current

| Range | Resolution | Accuracy | Frequency Response | Overload protection |
|---|---|---|---|---|
| 66.00A | 0.01A | ± (2%+12) | 50Hz ~ 60Hz | 1000A DC/AC |
| 1000A | 1A | ± (2%+8) | | |

### ⚠ Warning

The operating temperature must be 0°C ~40°C when measuring current.

**Remarks:**

- Change to AC:
  Combine AC and True RMS response method. Input sine wave to adjust.

Non sine wave signals must be adjusted based on the following data:
Peak factor: 1.4~2.0, add 1.0% on the stated accuracy.
Peak factor: 2.0~2.5, add 2.5% on the stated accuracy
Peak factor: 2.5~3.0, add 4.0% on the stated accuracy.

## MAINTENANCE

This section provides basic maintenance information including battery replacement instruction.

### ⚠ Warning

**Do not attempt to repair or service your Meter unless you are qualified to do so and have the relevant calibration, performance test, and service information.**

**To avoid electrical shock or damage to the Meter, do not get water inside the case.**

### A. General Service

- Periodically wipe the case with a damp cloth and mild detergent. Do not use abrasives or solvents.
- To clean the terminals with cotton bar with detergent, as dirt or moisture in the terminals can affect readings.
- Turn the Meter power off when it is not in use.
- Take out the battery when the meter is not to be used for a log period of time.
- Do not use or store the Meter in a place of humidity, high temperature, explosive, inflammable and strong magnetic field.

**B. Replacing the Battery** (see figure 12)

**⚠ Warning**

**To avoid false readings, which could lead to possible electric shock or personal injury, replace the battery as soon as the battery indicator " 🔋 " appears.**

**Make sure the transformer jaw and the tets leads are disconected from the circuit being tested before opening the case bottom.**

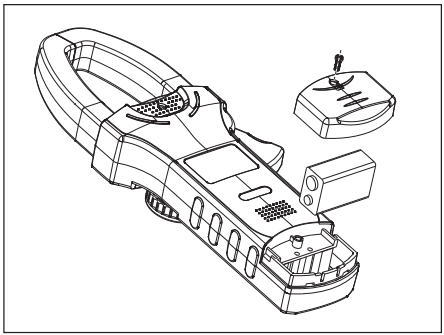

Figure 12

To replace the battery:

1. Turn the Meter off and remove all the connections from the input terminals
2. Turn the Meter's front case down.
3. Remove the screw from the battery compartment, and separate the battery compartment from the case bottom.
4. Take out the old battery and replace with a new 9V battery (6LF22, 1604A).
5. Rejoin the case bottom and the battery compartment, and reinstall the screw.

* END *

This operating manual is subject to change without notice.

©Copyright 2007 Tenma Test Equipment.
All rights reserved.

Tenma Test Equipment
405 S. Pioneer Blvd.
Springboro,Ohio 45066
www.tenma.com