TERMINAL STRIPS

TERMINAL STRIPS

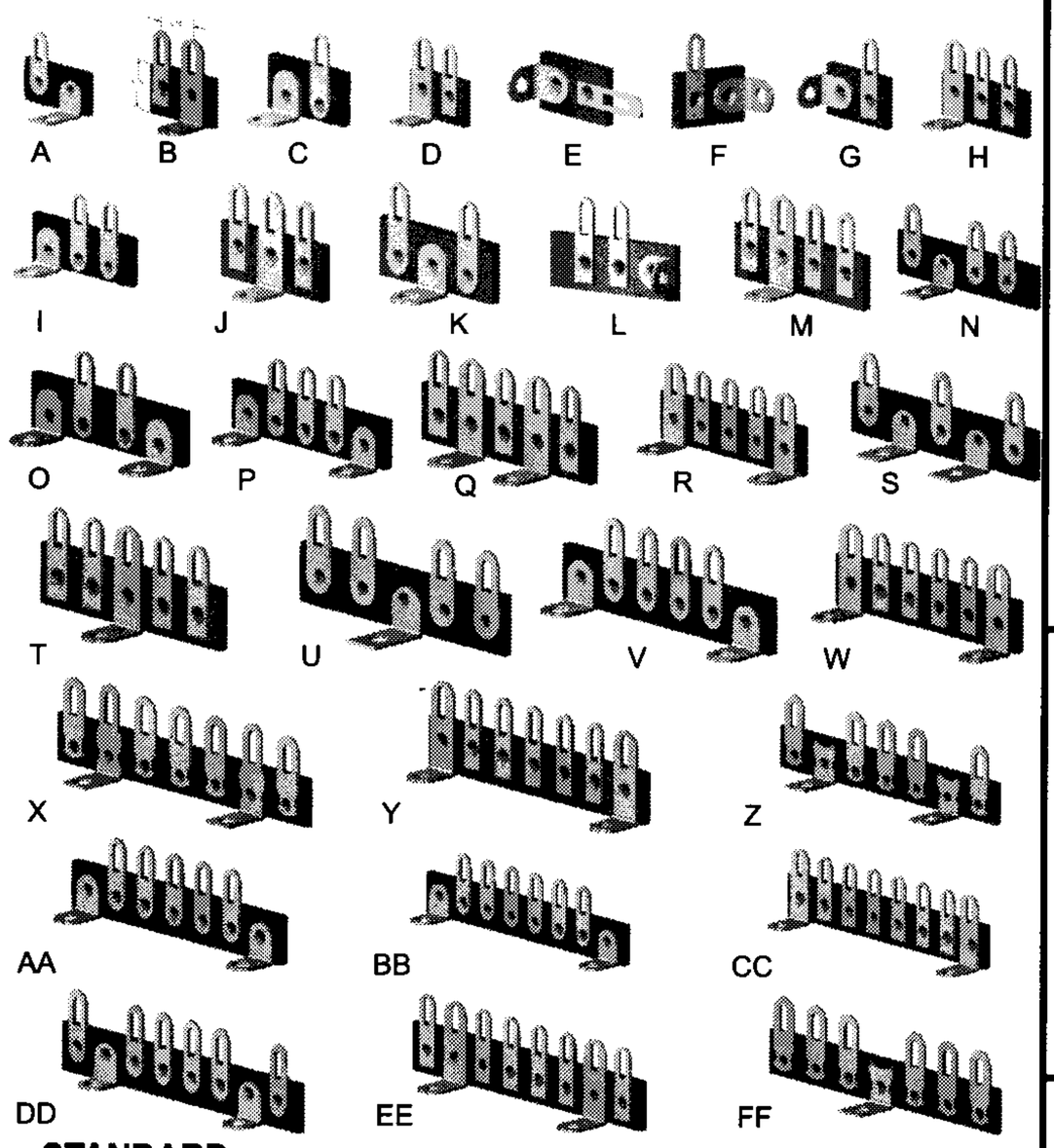

STANDARD

LUG: PLATED STEEL , SPACED 3/8" CENTERS
STRIP: PHENOLIC 3/8" WIDE X .062" THICK
MOUNT: .140" HOLE FOR NO. 6 SCREW

PART NO,	FIG,	PART NO.	FIG.
707-5001	A	707-5017	Q
707-5002	B	707-5018	R
707-5003	C	707-5019	S
707-5004	D	707-5020	T
707-5005	E	707-5021	U
707-5006	F	707-5022	V
707-5007	G	707-5023	W
707-5008	H	707-5024	X
707-5009	I	707-5025	Y
707-5010	J	707-5026	Z
707-5011	K	707-5027	AA
707-5012	L	707-5028	BB
707-5013	M	707-5029	CC
707-5014	N	707-5030	DD
707-5015	O	707-5031	EE
707-5016	P	707-5032	FF

MINIATURE

LUG: PLATED STEEL , SPAC ED 1/4" CENTERS
STRIPS: XP PHENOLIC 5/16" WIDE X .062" THICK
MOUNT: .096" HOLE FOR NO. 3 SCREW OR 3/32 RIVET

PART NO,	FIG,	PART NO.	FIG.
707-5101	A	707-5117	Q
707-5102	B	707-5118	R
707-5103	C	707-5119	S
707-5104	D	707-5120	T
707-5105	E	707-5121	U
707-5106	F	707-5122	V
707-5107	G	707-5123	W
707-5108	H	707-5124	X
707-5109	I	707-5125	Y
707-5110	J	707-5126	Z
707-5111	K	707-5127	AA
707-5112	L	707-5128	BB
707-5113	M	707-5129	CC
707-5114	N	707-5130	DD
707-5115	O	707-5131	EE
707-5116	P		

SCREW TYPE



LUG: BRASS HOT TINNED,
SPACED 7/16" CENTERS
SCREW: PLATED STEEL, 6-32 x 3/8"
STRIP: XP PHENOLIC 5/8" WIDE x .062 THICK

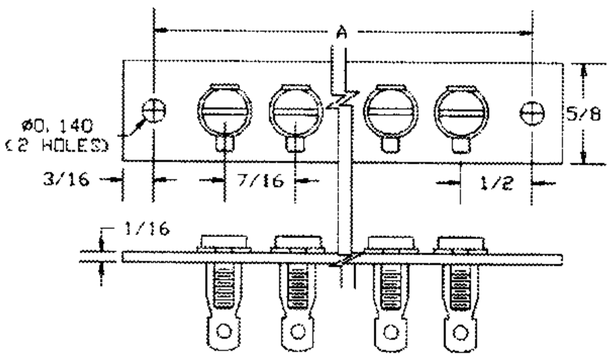

PART NO.	TERMINAL	"A"
707-5301	1	7/8
707-5302	2	1-7/16
707-5303	3	1-3/4
707-5304	4	2-3/16
707-5305	5	2-5/8
707-5306	6	3-1/16
707-5307	7	3-1/2
707-5308	8	3-15/16
707-5309	9	4-3/8
707-5310	10	4-13/16

707-5311 SHORTING LINK

BRACKET TYPE

BRACKETS: PLATED STEEL , CADMIUM
MOUNT: .140 I.D FOR NO.6 SCREW
LUGS: PLATED STEEL, TIN PLATED,
3/8" CENTERS
STRIP: XP PHENOLIC 3/8" WIDE x .062 THICK

PART NO.	FIG.	LUGS
707-5151	A	2
707-5152	C	3
707-5153	B	3
707-5154	B	4
707-5155	B	5
707-5156	B	6

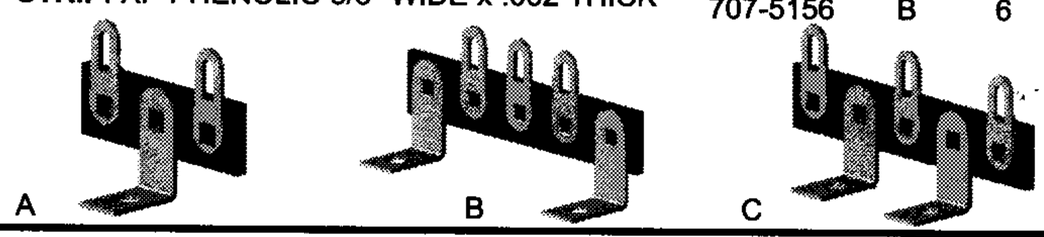

"T" TYPE

LUGS: PLATED STEEL, SPACED 3/8" CENTERS
MOUNT: .140" I.D. FOR NO.6 SCREW
STRIP: XP PHENOLIC 3/8" WIDE x .062 THICK

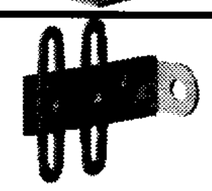

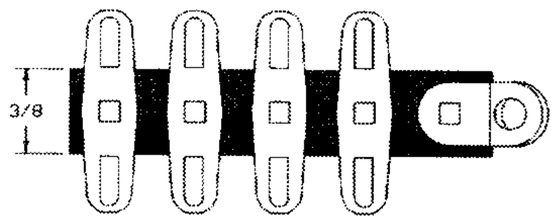

PART NO.	LUGS
707-5221	1
707-5222	2
707-5223	3
707-5224	4
707-5225	5

QUICK SLIDE OR SOLDER

LUG: PLATED STEEL , SPACED 3/8" CENTERS
STRIPS: XP PHENOLIC 3/8" WIDE X .062" THICK
MOUNT: .140" HOLE FOR NO. 6 SCREW
DESCR.: QUICK CONNECT-DISCONNECT:
TIE POINT SOLDER
WRAP AND SOLDER

PART NO,	FIG,	PART NO.	FIG.
707-5201	A	707-5208	H
707-5202	B	707-5209	I
707-5203	C	707-5210	J
707-5204	D	707-5211	K
707-5205	E	707-5212	L
707-5206	F	707-5213	M
707-5207	G	707-5214	N

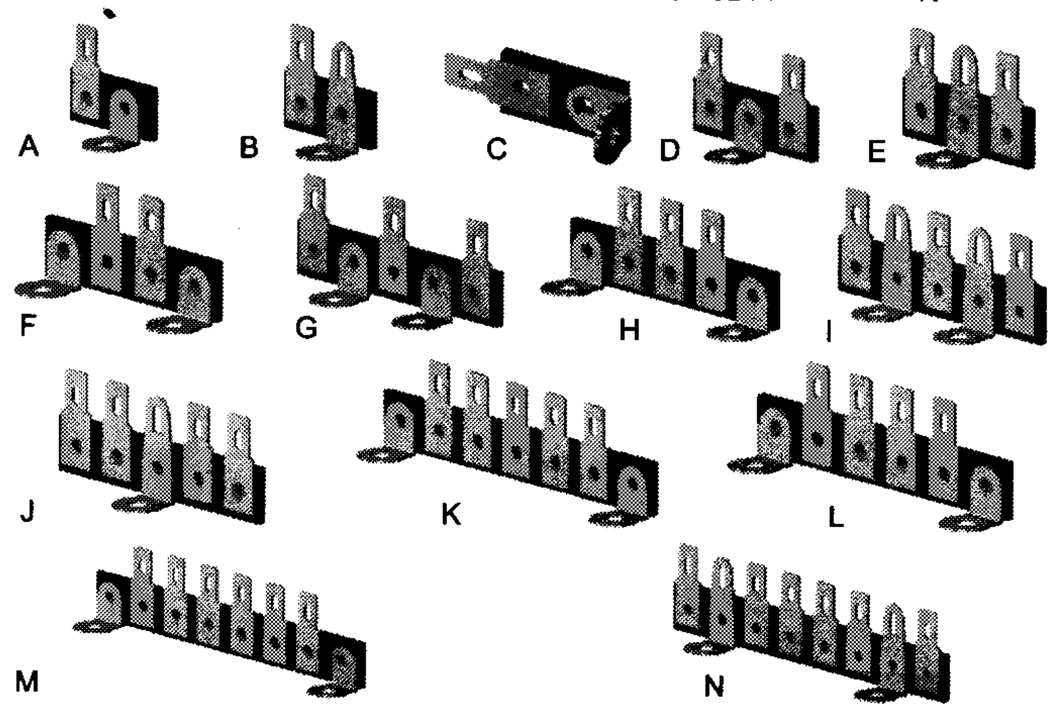

800-847-4162 (Outside N.Y.S.)
Ph: 212-777-6571 Fax: 212-991-0161
sales@concord-electronics.com
engineering@concord-electronics.com