

KLIXON® | 6766-19 Series

35 to 150 Amp Commercial Thermal Circuit Breaker

FEATURES

- 30VDC, 35 to 150 Amps
- Manual reset
- Weatherproof SAE J1625 and ideally suited for rugged applications
- Ignition protected SAE J1171

DESCRIPTION

The KLIXON® 6766-19 series is a manually switchable thermal circuit breaker that is designed to meet the harshest environmental requirements. The 6766-19 series breakers are weatherproof for protection against moisture, dust, grease, fuel vapors, and other harsh environments. The 6766-19 series of breakers is suited for rugged applications, where a robust switchable breaker is required for accessory, equipment and battery protection on heavy trucks, buses, construction equipment, off-road vehicles, marine, recreational vehicles (RVs) and electric (hybrid) vehicles.

ORDERING INFORMATION

X – X

Configuration
6766-19 = Manual, sealed

Amp Rating
(35, 40, 45, 50, 60, 70, 80, 90 105, 120, 135, 150)

PERFORMANCE CHARACTERISTICS

Calibration : 200% rated current, 77°F (25°C)	35 to 150 Amps : 8 to 100 seconds
Ultimate Trip At 77°F (25°C)	Must hold 100%, Must trip 135%
Endurance	Per SAE J1625
Interrupt Current Capacity	Per SAE J1625 and ABYC E-11
Vibration	Per SAE J1455, 4G's, 10-2K Hz
Dielectric Strength	MIL-STD-202 Method 301, 1500VAC min
Insulation Resistance	MIL-STD-202 Method 302, Condition B, 100 MΩ min
Weight (with mounting nuts)	6766-19 : 129 grams max

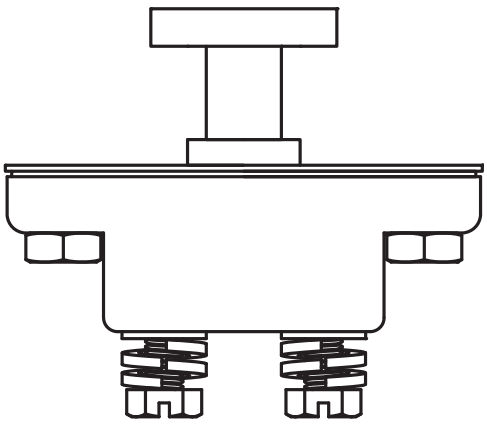

TRIP CURVE - Approximate Time, Current Characteristics At 77°F (25°C)

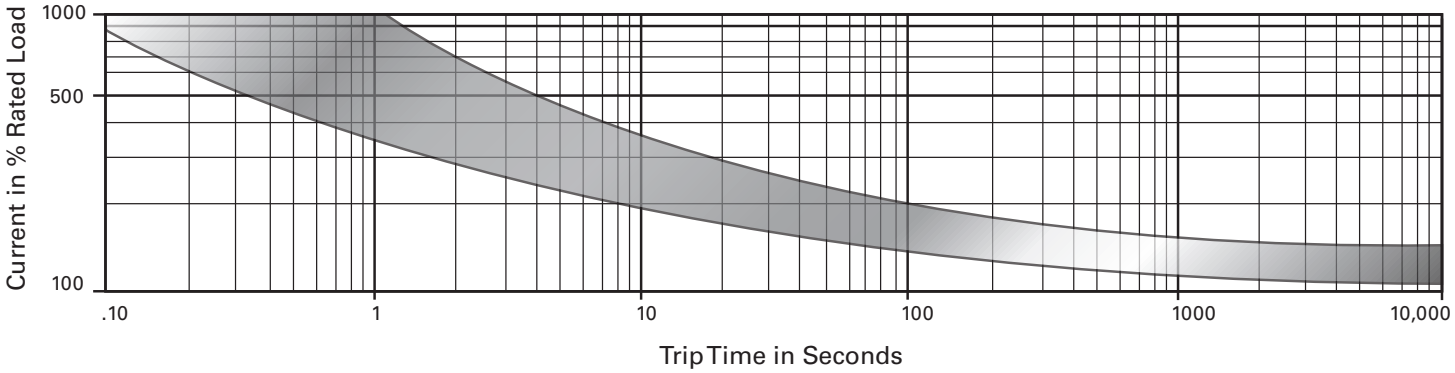

DIMENSIONS - 6766-19

INCHES [MM]

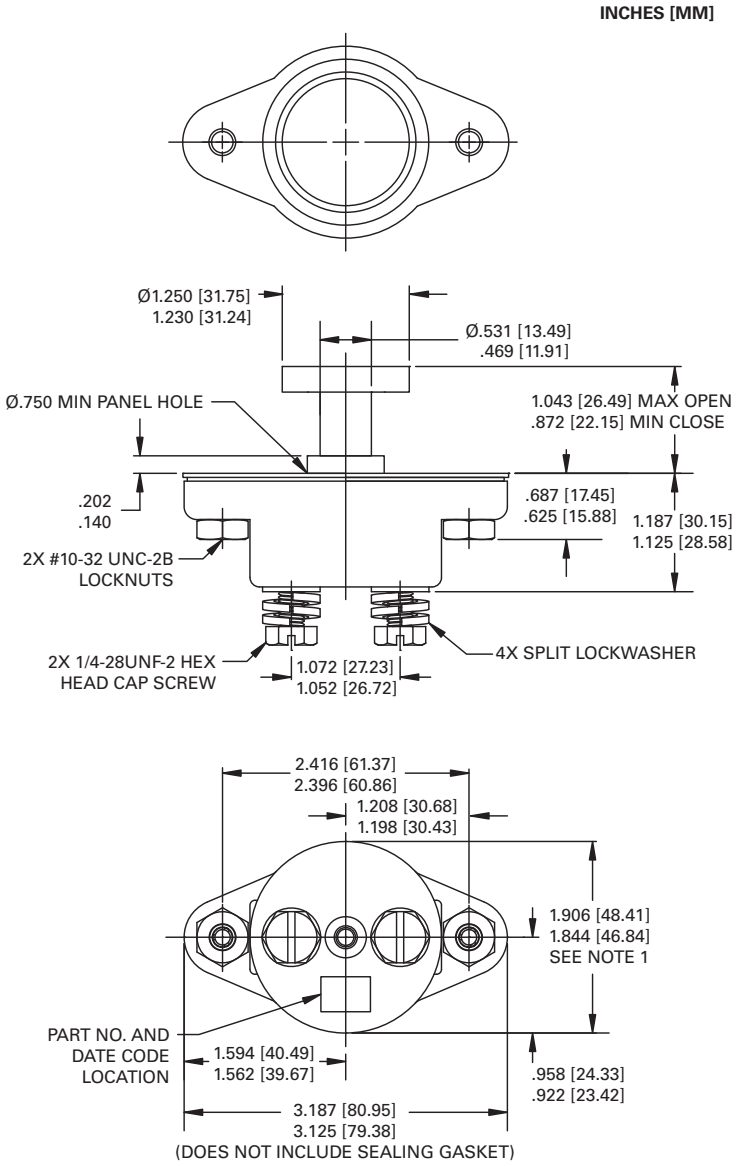

DERATING CURVE

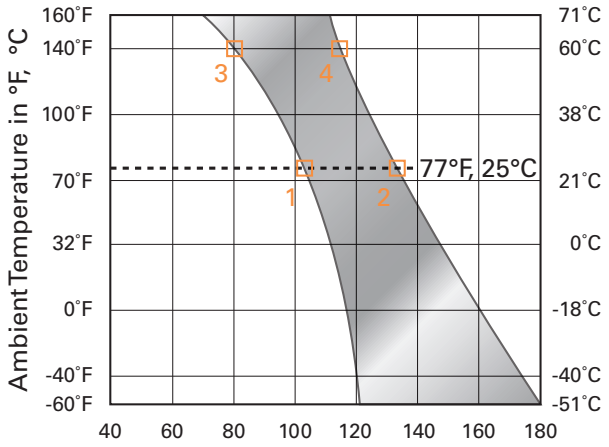

Performance characteristics are based on room temperature (77°F, 25°C). Consult Derating curve for ambient temperatures significantly higher or lower than standard room temperature.

Example: At 77°F (25°C) the device is calibrated to hold at 100% of rated current (1) and trip at 135% of rated current (2). At 140°F (60°C), the same device will hold at approximately 78% of rated current (3), and trip at approximately 115% of rated current (4).

BUSINESS CENTER

http://www.sensata.com/

Sensata Technologies Inc.
529 Pleasant Street
Attleboro, MA 02703, USA
Phone: +1 508-236-3800
Fax: +1 508-236-2349

Sensata Technologies

The World Depends on Sensors and Controls

©2013 Sensata Technologies, Inc. All rights reserved worldwide. Printed in USA, revised April 2013.

Important Notice: Sensata Technologies reserves the right to make changes to, or to discontinue, any product or service identified in this publication without notice. Before placing orders, users should obtain the latest version of the relevant information to verify that the information being relied upon is current.

Sensata Technologies assumes no responsibility for customers' product designs or applications. Users must determine the suitability of the Sensata device described in this publication for their application, including the level of reliability required. Many factors beyond Sensata's control can affect the use and performance of a Sensata product in a particular application, including the conditions under which the product is used and the time and environmental conditions in which the product is expected to perform. As these factors are uniquely within the user's knowledge and control, it is essential that the user evaluate the Sensata product to determine whether it is fit for a particular purpose and suitable for the user's application.

Sensata Technologies products are sold subject to Sensata's Terms and Conditions of Sale which can be found at: www.sensata.com/terms.htm