Holder 656



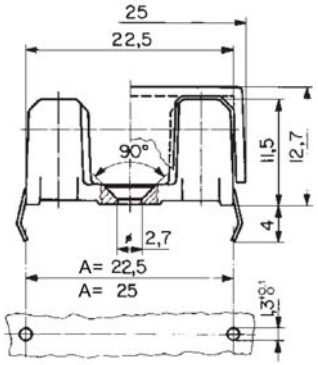

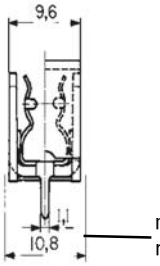

max. dimension for removal of cover

PC Mount, 5x20mm Fuses

Standard
IEC 60127-6
CSA C22.2-39, UL 512

Approvals

SEV	(10A/250V)
VDE ÜG	(10A/250V)
SEMKO	(10A/250V)
UL	(10A/250V)
CSA	(10A/250V)

RoHS

Features

Low profile fuse block with insulation walls
"Kicked" PCB-terminals, tin plated
Screw or rivet fastening
holder also available fitted with a fuse on request

Derating curves

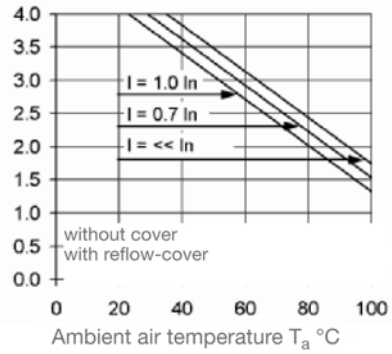

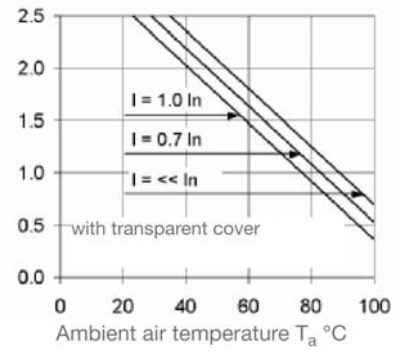

Admissible power acceptance in Watt

Cover 660

suitable for IR-soldering process



RoHS

Cover 659

transparent



RoHS

Specifications

Packaging
Bulk (100 pcs.)

Order Numbers

Holder 656 A = 22.5mm	No. 656 0000 100
Holder 656 A = 25.0mm	No. 656 0000 140
Cover 659	No. 659 0000 000
Cover 660	No. 660 0000 100

Mounting
656: Solder pins 0.4mm x 1.1mm
Ø 2.7mm screw hole may be used optionally

Materials

Holder:	Black Thermoplastic UL 94 V-0
Metal Parts:	Copper alloy, tin plated

Electrical Data

Rated Voltage:	250V
Rated Current:	10A

Rated power acceptance at ambient air temperature 23°C

without cover:	4W
with reflow-cover:	4W
with transparent cover:	2.5W

Operating Temperature
-40°C to +85°C (consider de-rating)

Climatic Category
GPF according to DIN 40040

Stock Conditions
+10°C to +60°C
relative humidity ≤ 75% yearly average,
without dew, maximum value for 30 days - 95%

Vibration Resistance
Frequency range 10-500 Hz, crossover frequency 60 Hz
< 60 Hz constant amplitude of 0.75mm
> 60 Hz constant acceleration of 10g

Contact Resistance
5mΩ

Dielectric Strength
> 3kV, 50 Hz, 1 min.

Impulse withstand Voltage
Ü1.2/50: > 12 kV between live parts of different potentials

Insulation Resistance
(500 V DC/1 min): >10 MΩ between live parts of different potentials

Solderability
235°C/2s, acc. to IEC 60068-2-20, test Ta, method 1

Soldering Heat Resistance
350°C/5s, acc to IEC60068-2-20 test Tb, method 1B

Minimum Cross Section
Conducting path - 0.2mm²

Torque/fixing screw
max. 0.3 Nm

Order Information

Qty.	Order-No.

Note: 1.00 means the number one with two decimal places. 1,000 means the number one thousand.

Specifications are subject to change without notice

WICKMANN

In our continuing strategy to deliver unparalleled circuit protection solutions, technical expertise and application leadership, we proudly introduce the WICKMANN Group and its products to the Littelfuse portfolio.