Holder / No. 652

Not for new designs - refer to No. 852 and 853



Vertical / 2-Pin

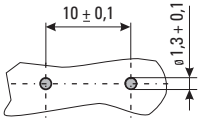

Holes in the printed circuit board: 1,3 + 0,1

Cap / No. 653



Flush Mount Type
Design 07: without silicon washer (IP 40)
Design 04: with silicon washer (IP 54)
between holder and cap

Cap / No. 655



Finger Grip Type
Design 07: without silicon washer (IP 40)
Design 04: with silicon washer (IP 54)
between holder and cap

PC Mount, Shocksafe 5x20mm Fuses

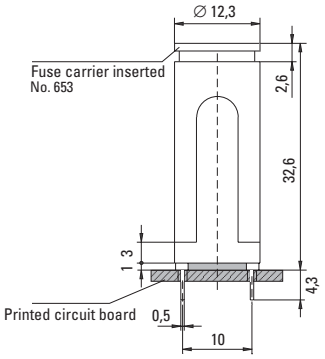

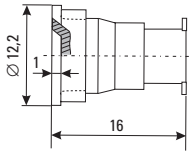

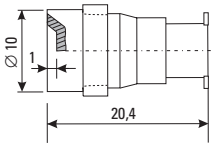

RoHS

Order Information

Packaging
Bulk (100 pcs.)

Order Numbers

Holder	No. 652 0000 040
Cap, Flush Mount, IP 40	No. 653 0000 070
Cap, Flush Mount, IP 54	No. 653 0000 040
Cap, Finger Grip, IP 40	No. 655 0000 070
Cap, Finger Grip, IP 54	No. 655 0000 040

Specifications are subject to change without notice

Note: 1.00 means the number one with two decimal places. 1,000 means the number one thousand.

Specifications

Standard
IEC 60127-6
UL 512
CSA C22.2. No.39

Approvals
VDE: License No. 92599
SEMKO: Certificate Nos. 9533178/9635055
UL Recognized: File No. E 70164
CSA Certified: File No. 47574

Mounting
(2) Solder pins 0.5mm x 1.1mm

Protection Class & Category
IP 40 (with Cap 653 07 & 655 07 acc. to IEC 60529)
IP 54 (with Cap 653 04 & 655 04 acc. to IEC 60529)
PC2 (IEC 60127-6)

Materials

Holder/Cap:	Black Thermoplastic Polyamide PA 6.6, UL94 V-0
Sealing Washer:	Silicon (Cap 653 04 & 655 04)
Metal Parts:	Copper alloy, corrosion protected
Terminals:	Solderable, tinned

Electrical Data (23°C)

Rated Voltage:	250V
Rated Current:	6.3A (VDE/SEMKO) 16A (UL/CSA)
Rated Power:	2.5W (VDE/SEMKO)

Operating Temperature
-25°C to +70°C (consider de-rating)

Climatic Test
-25°C/+70°C/21 days (IEC 60068-2-1...3)

Stock Conditions
+10°C to +60°C
relative humidity ≤ 75% yearly average,
without dew, maximum value for 30 days - 95%

Vibration Resistance
24 cycles at 15 min. each (IEC 60068-2-6)
10 - 60Hz at 0.75mm amplitude
60 - 2000Hz at 10g acceleration

Contact Resistance
≤ 5mΩ

Dielectric Strength
> 1.5 kV

Impulse Voltage
4 kV, 50 Hz, 1 min., dry

Insulation Resistance
> 10^3 MΩ (500 VDC, 1 min.)

Solderability
235°C, 3 sec. (Wave)
350°C, 1 sec. (Soldering Iron)

Soldering Heat Resistance
260°C, 5 sec. (IEC 60068-2-20)

Minimum Cross Section
Conducting path - 0.2mm^2

Marking
652, 250V, Approvals

Unit Weight
3.8g (Holder) / 2.0g (653) / 2.4g (655)

WICKMANN

In our continuing strategy to deliver unparalleled circuit protection solutions, technical expertise and application leadership, we proudly introduce the WICKMANN Group and its products to the Littelfuse portfolio.