Keysight Technologies

6540A Series Single-Output, 200 W DC Power Supplies

Data Sheet



KEYSIGHT TECHNOLOGIES

Introduction

Speed and accuracy for test optimization

This reliable series of 200 W DC power supplies can be controlled either from the front panel or via an analog programming voltage. When used in a test system, the fast up and down programming helps decrease test time. Quickly reacting protection features, including fast crowbar, CV/CC mode crossover and over-voltage protection help protect your valuable assemblies from damage. The linear topology produces very low ripple and noise, which allows you to make extremely accurate measurements of the devices which you are testing.

Lab bench use is enhanced by the fan speed control, which helps to minimize acoustic noise.

Specifications

Specifications *(at 0 ° to 55 °C unless otherwise specified)*	**6541A**	**6542A**	**6543A**	**6544A**	**6545A**
Number of outputs	1	1	1	1	1
GPIB	No	No	No	No	No
Output ratings					
Voltage	0 to 8 V	0 to 20 V	0 to 35 V	0 to 60 V	0 to 120 V
Current	0 to 20 A	0 to 10 A	0 to 6 A	0 to 3.5 A	0 to 1.5 A
Maximum current (50 °C/55 °C)	18 A/17 A	9 A/8.5 A	5.4 A/5.1 A	3.2 A/3 A	1.4 A/1.3 A
Programming accuracy (at 25 °C ± 5 °C)					
Voltage 0.06% +	5 mV	10 mV	15 mV	26 mV	51 mV
Current 0.15% +	26 mA	13 mA	6.7 mA	4.1 mA	1.7 mA
Ripple and noise from 20 Hz to 20 MHz					
Voltage rms	300 µV	300 µV	400 µV	500 µV	700 µV
peak-to-peak	3 mV	3 mV	4 mV	5 mV	7 mV
Current rms	10 mA	5 mA	3 mA	1.5 mA	1 mA
Load regulation					
Voltage	1 mV	2 mV	3 mV	4 mV	5 mV
Current	1 mA	0.5 mA	0.25 mA	0.25 mA	0.25 mA
Line regulation					
Voltage	0.5 mV	0.5 mV	1 mV	1 mV	2 mV
Current	1 mA	0.5 mA	0.25 mA	0.25 mA	0.25 mA

Transient response time

Less than 100 µs for the output voltage to recover to its previous level (within 0.1% of the voltage rating of the supply or 20 mV, whichever is greater) following any step change in load current of up to 50% of the output current rating of the supply

Supplemental characteristics *(Non-warranted characteristics determined by design and useful in applying the product)*	**6541A**	**6542A**	**6543A**	**6544A**	**6545A**
Average programming resolution					
Voltage	2 mV	5 mV	10 mV	15 mV	30 mV
Current	6 mA	3 mA	2 mA	1.2 mA	0.5 mA
OVP	13 mV	30 mV	54 mV	93 mV	190 mV
OVP accuracy	160 mV	400 mV	700 mV	1.2 V	2.4 V

Specifications, continued

Specifications *(at 0 ° to 55 °C unless otherwise specified)*	**6541A-J04** Special order option	**6544A-J09** Special order option	**6545A-J05** Special order option
Number of outputs	1	1	1
GPIB	No	No	No
Output ratings			
Voltage	13 V	70 V	150 V
Current	15.3 A	3 A	1.2 A
Maximum current (50 °C/55 °C)	13.77 A/13 A	2.7 A/2.55 A	1.08 A/1.02 A
Programming accuracy (at 25 °C ± 5 °C)			
Voltage 0.06% +	8.5 mV	31 mV	65 mV
Current 0.15% +	21 mA	4.1 mA	1.7 mA
Ripple and noise from 20 Hz to 20 MHz			
Voltage rms	300 µV	600 µV	900 µV
peak-to-peak	3 mV	6 mV	9 mV
Current rms	8 mA	1.5 mA	1 mA
Load regulation			
Voltage	1 mV	4.5 mV	7 mV
Current	1 mA	0.25 mA	0.25 mA
Line regulation			
Voltage	0.5 mV	1.5 mV	2.5 mV
Current	1 mA	0.25 mA	0.25 mA

Transient response time

Less than 100 µs for the output voltage to recover to its previous level (within 0.1% of the voltage rating of the supply or 20 mV, whichever is greater) following any step change in load current of up to 50% of the output current rating of the supply

Supplemental characteristics *(Non-warranted characteristics determined by design and useful in applying the product)*	**6541A-J04** Special order option	**6544A-J09** Special order option	**6545A-J05** Special order option
Average programming resolution			
Voltage	3.5 mV	1.4 mV	37.5 mV
Current	5 mA	1.2 mA	0.5 mA
OVP	23 mV	110 mV	250 mV
OVP accuracy	260 mV	1.5 mV	3 V

Supplemental characteristics for all model numbers

DC floating voltage: Output terminals can be floated up to ± 240 VDC from chassis ground

Remote sensing: Up to half the rated output voltage can be dropped in each load lead. The drop in the load leads subtracts from the voltage available for the load.

Output programming response time: The rise and fall time (10/90% and 90/10%) of the output voltage is less than 15 ms. The output voltage change settles within 1 LSB (0.025% x rated voltage) of final value in less than 60 ms.

Down programming: An active down programmer sinks approximately 20% of the rated output current

Modulation: (Analog programming of output voltage and current)
Input signal: 0 to -5 V
Input impedance: 10 kΩ nominal

AC input:
(AC input frequency 47 to 63 Hz)

Voltage	100 VAC	120 VAC	220 VAC	240 VAC
Current	4.4 A	3.8 A	2.2 A	2.0 A

Input power: 480 VA, 400 W at full load; 60 W at no load

Regulatory compliance: Conforms to UL1244 and IEC 61010-1

Size:
425.5 mm W x 88.1 mm H x 439 mm D
(16.75 in x 3.5 in x 17.3 in)

Weight: Net, 14.2 kg (31.4 lb); shipping, 16.3 kg (36 lb)

Warranty: One year

Keysight Technologies, Inc. models: 6541A, 6542A, 6543A, 6544A, 6545A

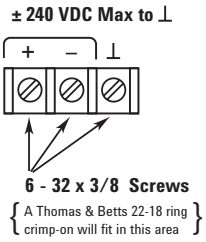

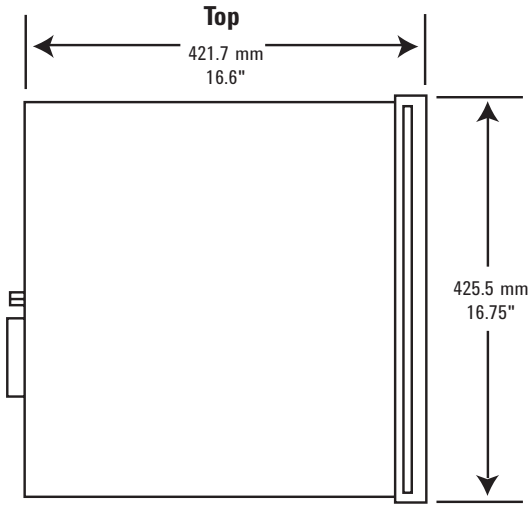

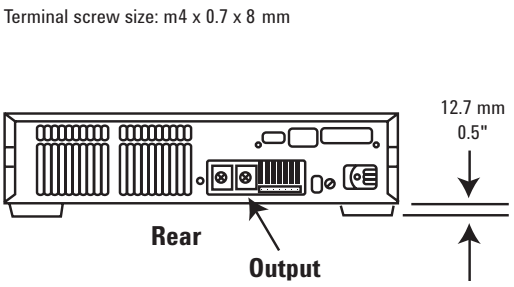

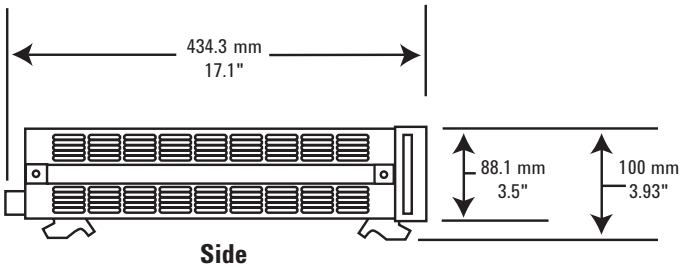

Ordering information

Opt 100 87 to 106 VAC, 47 to 63 Hz
Opt 120 104 to 127 VAC, 47 to 63 Hz
Opt 220 191 to 233 VAC, 47 to 63 Hz
Opt 240 209 to 250 VAC, 47 to 63 Hz

Opt 0L1 Full documentation on CD-ROM and printed user's guide. CD-ROM includes user's guide, service manual, and quick start guide
Opt 0B3 Printed service manual

Accessories

1CM002A* Rack mount flange kit 88.1 mm H (2U), 1.75 inch hole spacing, two flange brackets
1CP001A* Rack mount flange and handle kit 88.1 mm H (2U), two brackets and front handles
E3663AC Support rails for Keysight rack cabinets
p/n 1494-0060 Accessory slide kit

Application notes

10 Practical Tips You Need to Know About Your Power Products, 5965-8239E

Understanding Linear Power Supply Operation (AN1554), 5989-2291EN

* Support rails required

myKeysight

myKeysight

www.keysight.com/find/mykeysight
A personalized view into the information most relevant to you.

Three-Year Warranty
www.keysight.com/find/ThreeYearWarranty
Keysight's commitment to superior product quality and lower total cost of ownership. The only test and measurement company with three-year warranty standard on all instruments, worldwide.

Keysight Assurance Plans
www.keysight.com/find/AssurancePlans
Up to five years of protection and no budgetary surprises to ensure your instruments are operating to specification so you can rely on accurate measurements.

www.keysight.com/quality
Keysight Technologies, Inc.
DEKRA Certified ISO 9001:2008
Quality Management System

Keysight Channel Partners
www.keysight.com/find/channelpartners
Get the best of both worlds: Keysight's measurement expertise and product breadth, combined with channel partner convenience.

www.keysight.com/find/6540

For more information on Keysight Technologies' products, applications or services, please contact your local Keysight office. The complete list is available at:
www.keysight.com/find/contactus

Americas

Canada	(877) 894 4414
Brazil	55 11 3351 7010
Mexico	001 800 254 2440
United States	(800) 829 4444

Asia Pacific

Australia	1 800 629 485
China	800 810 0189
Hong Kong	800 938 693
India	1 800 112 929
Japan	0120 (421) 345
Korea	080 769 0800
Malaysia	1 800 888 848
Singapore	1 800 375 8100
Taiwan	0800 047 866
Other AP Countries	(65) 6375 8100

Europe & Middle East

Austria	0800 001122
Belgium	0800 58580
Finland	0800 523252
France	0805 980333
Germany	0800 6270999
Ireland	1800 832700
Israel	1 809 343051
Italy	800 599100
Luxembourg	+32 800 58580
Netherlands	0800 0233200
Russia	8800 5009286
Spain	0800 000154
Sweden	0200 882255
Switzerland	0800 805353 Opt. 1 (DE) Opt. 2 (FR) Opt. 3 (IT)
United Kingdom	0800 0260637

For other unlisted countries:
www.keysight.com/find/contactus
(BP-07-10-14)

KEYSIGHT TECHNOLOGIES

This information is subject to change without notice.
© Keysight Technologies, 2012-2014
Published in USA, August 2, 2014
5990-9298EN
www.keysight.com