Pomona®

Model 6440
Nut, Hex 8-32

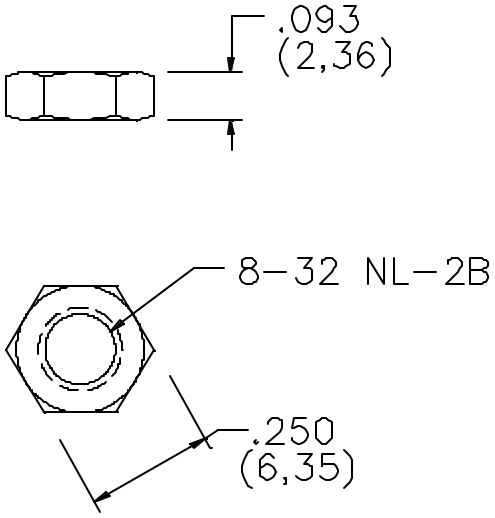

FEATURES:

- Used on Pin Tip Jack and Binding Post Models 2142, 2382, 2383, 2440, 2439, 3542, 3750, 3760, 3770 and others.

MATERIALS:

8-32 Brass, Nickel Plated per QQN-290 Class 2, 200 Micro inches, full bright.

ORDERING INFORMATION: Model 6440
Packaged 500 Hex Nuts per bag.

All dimensions are in inches. Tolerances (except noted): .xx = ±.02" (,51 mm), .xxx = ± .005" (,127 mm).
All specifications are to the latest revisions. Specifications are subject to change without notice.
Registered trademarks are the property of their respective companies. Made in USA

Sales: 800-490-2361 Fax: 888-403-3360
Technical Assistance: 800-241-2060

Mouser Electronics

Authorized Distributor

Click to View Pricing, Inventory, Delivery & Lifecycle Information:

Pomona:
6440