Accessories - Shelves

Sliding Desktop



Design Features

Requires only 1.75" panel space. Working area is 12" X 15-3/4". Supports 50 lbs. Plastic laminate surface. Ball-bearing slide mechanism.

Requires two pairs of panel mounting rails per cabinet rack.

Finish:

- Metallic Gray (MG)
- White Texture (WH)
- Top surface is antique white.

Surface Area					
Catalog Number	**Drawings**	**Width**	**Depth**	**Panel**	**Weight lbs**
60-2361		15-3/4"	15-3/8"	19" X 1.75"	11

PART NAME	KEYBOARD AND MOUSE SHELF ASSEMBLY	PART No.	SA-1775 AND SA-1776

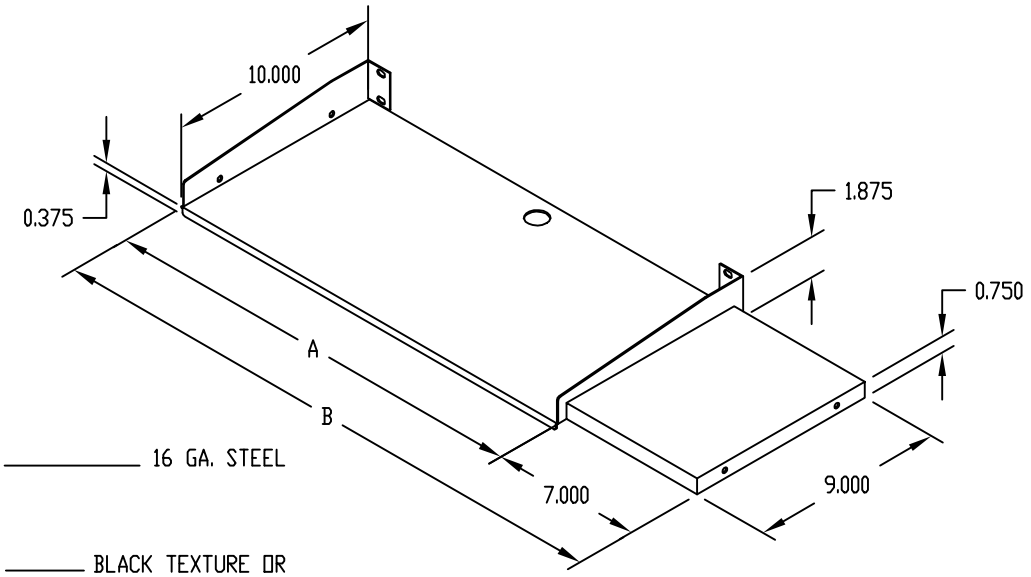

MATERIAL:
KEYBOARD SHELF AND MOUSE PAD ——— 16 GA. STEEL

FINISH:
KEYBOARD SHELF AND MOUSE PAD ——— BLACK TEXTURE OR METALLIC GRAY

LOAD RATING: 25 LBS. MAX.

PART No.	PANEL SPACE	A	B
SA-1775	19.000	20.125	27.125
SA-1776	23.000	24.125	31.125

PART NAME	SLIDING DESKTOP	PART No.	60-2361

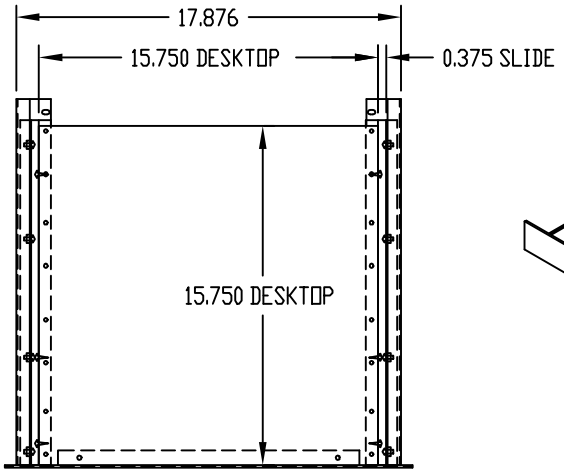

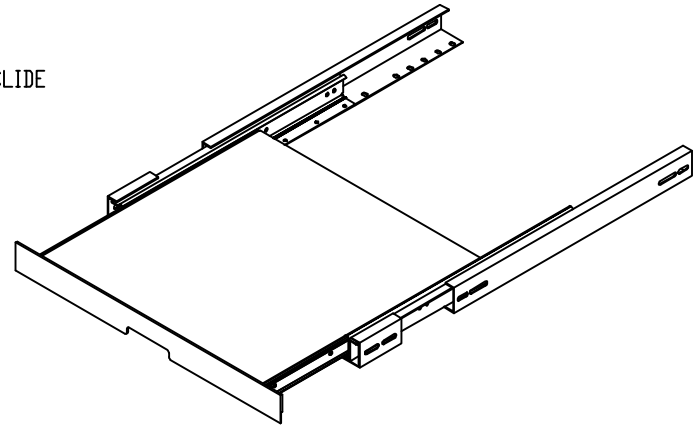

LOAD RATING: 50 LBS. MAX.

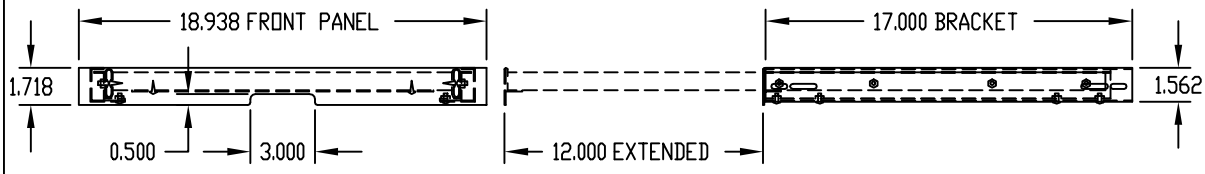

MATERIAL:
PANEL AND BRACKETS ——— 16 GA. STEEL
TOP ——— 3/4" THK. PLASTIC LAMINATE FACED PARTICLE BOARD

FINISH:
PANEL ——— METALLIC GRAY
——— WHITE TEXTURE
——— BLACK TEXTURE
BRACKETS ——— SMOOTH BLACK
TOP ——— ANTIQUE WHITE
SLIDES ——— BRIGHT ZINC PLATE

MOUNTING IN 17.000 CLEAR INSIDE DEPTH RACK

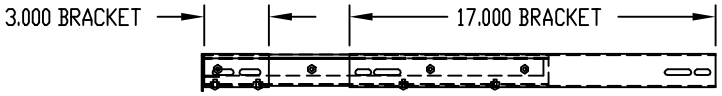

MOUNTING IN 20.500, 24.000 AND 29.250 CLEAR INSIDE DEPTH RACK