RoHS

bel

5MF Apr2013D

Type 5MF / 5MFP
Fast Blow Fuse Series

5 x 20mm Glass Tube
RoHS 6 Compliant

HF Pb **5MF / 5MFP Series, 5 x 20mm Fast Blow Fuse**

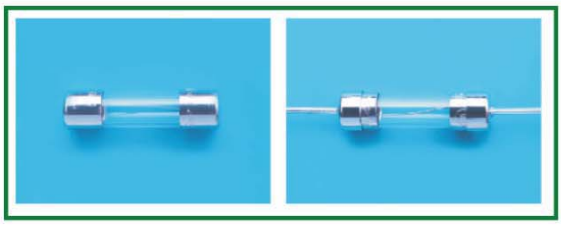

Description

5x20mm Fast Blow,glass tube body cartridge fuse designed, approved and complied with UL and CSA standard 248-14.

Features

- **Meet UL and CSA standard 248-14**
- **Wide operating temperature range**
- **Bulk and Tape & Reel packing available**
- **RoHS6 compliant**
- **Halogen Free**
- **Leadfree**

Applications

Provide individual protection for components or internal circuits.

- **Power Supplies**
- **Battery charger**
- **Monitor**
- **Adapter**

LEAD FREE = Pb

HALOGEN FREE = HF

Electrical Characteristics (UL / CSA STD.248-14)

Testing current	Blow Time	
	Minimum	Maximum
100%	4 Hrs.	N/A
135%	N/A	1 Hr
200%	N/A	5 Sec

Safety Agency Approvals

SAFETY AGENCY	SAFETY AGENCY CERTIFICATE NUMBER	AMPERE RANGE / VOLT @ I.R.ABILITY
c UL us	E20624	80mA - 3A / 250V AC @200A 80mA - 8A / 125V AC @10,000A
CSA	LR39772	
PS E	JET 1037-31003-1010 JET 1037-31003-1011	1A - 5A / 125V AC @500A
	JET 1037-31003-1007	>5A - 15A / 125V AC @300A
CE		80mA - 8A / 125V AC @10,000A

Specifications subject to change without notice

Bel Fuse Inc. 206 Van Vorst Street, Jersey City, NJ 07302 • Tel: 201-432-0463 • Fax: 201-432-9542 • E-Mail: belfuse@belf.com
Website: www.belfuse.com

Type 5MF / 5MFP
Fast Blow Fuse Series

5 x 20mm Glass Tube
RoHS 6 Compliant
HF Pb

bel

5MF Apr2013D

Electrical Specifications

Catalog Number	Ampere Rating	Typical Cold Resistance (ohm)	Volt-drop @100% In (Volt) Max.	Voltage Rating (V)	Interrupting Rating	Melting I2T <10 m Sec (A2 Sec)	Melting I2T @ 10 In (A2 Sec)	Maximum Power Dissipation (W)	Agency Approvals			
									cULus	SP	PSE	CE
5MF (P) 80-R	80mA	42.5	5.10	250	80mA - 3A / 250V AC @200A 80mA - 8A / 125V AC @10,000A	0.0004	0.0004	0.32	Y	Y		Y
5MF (P) 100-R	100mA	6.95	2.63	250		0.0009	0.0008	0.35	Y	Y		Y
5MF (P) 125-R	125mA	6.92	3.65	250		0.0017	0.0015	0.60	Y	Y		Y
5MF (P) 200-R	200mA	2.97	2.58	250		0.007	0.006	0.72	Y	Y		Y
5MF (P) 250-R	250mA	1.47	0.99	250		0.016	0.014	0.25	Y	Y		Y
5MF (P) 300-R	300mA	1.18	1.07	250		0.020	0.019	0.39	Y	Y		Y
5MF (P) 350-R	350mA	0.92	1.06	250		0.038	0.032	0.36	Y	Y		Y
5MF (P) 400-R	400mA	0.65	0.74	250		0.080	0.084	0.20	Y	Y		Y
5MF (P) 500-R	500mA	0.49	0.78	250		0.122	0.118	0.33	Y	Y		Y
5MF (P) 600-R	600mA	0.394	0.77	250		0.195	0.195	0.44	Y	Y		Y
5MF (P) 700-R	700mA	0.305	0.73	250		0.265	0.267	0.65	Y	Y		Y
5MF (P) 800-R	800mA	0.243	0.61	250		0.40	0.40	0.54	Y	Y		Y
5MF (P) 1-R	1A	0.118	0.22	250		0.88	0.85	0.26	Y	Y	Y	Y
5MF (P) 1.25-R	1.25A	0.085	0.21	250		1.5	1.5	0.31	Y	Y	Y	Y
5MF (P) 1.5-R	1.5A	0.067	0.17	250		2.6	2.6	0.36	Y	Y	Y	Y
5MF (P) 2-R	2A	0.046	0.16	250		4.4	4.5	0.44	Y	Y	Y	Y
5MF (P) 2.5-R	2.5A	0.037	0.16	250		7.6	7.8	0.52	Y	Y	Y	Y
5MF (P) 3-R	3A	0.030	0.17	250		13	14	0.59	Y	Y	Y	Y
5MF (P) 3.5-R	3.5A	0.025	0.15	125		17	18	0.65	Y	Y	Y	Y
5MF (P) 4-R	4A	0.019	0.14	125		22	24	0.72	Y	Y	Y	Y
5MF (P) 5-R	5A	0.016	0.15	125		38	41	0.84	Y	Y	Y	Y
5MF (P) 6-R	6A	0.012	0.13	125		65	72	0.96	Y	Y	Y	Y
5MF (P) 7-R	7A	0.011	0.13	125		88	97	1.10	Y	Y	Y	Y
5MF (P) 8-R	8A	0.009	0.13	125		113	126	1.23	Y	Y	Y	Y

Consult manufacturer for other ratings

Soldering Parameters

Lead-free Wave Soldering Profile	
Wave Soldering Parameter	
Average ramp-up rate	200°C / second
Heating rate during preheat	typical 1 - 2 °C / second Max. 4°C/ second
Final preheat temperature	within 125°C of soldering temperature
Peak temperature Tp	260°C
Time within +0 °C / -5°C of actual peak temperature	10 seconds
Ramp-down rate	5 °C / second max.

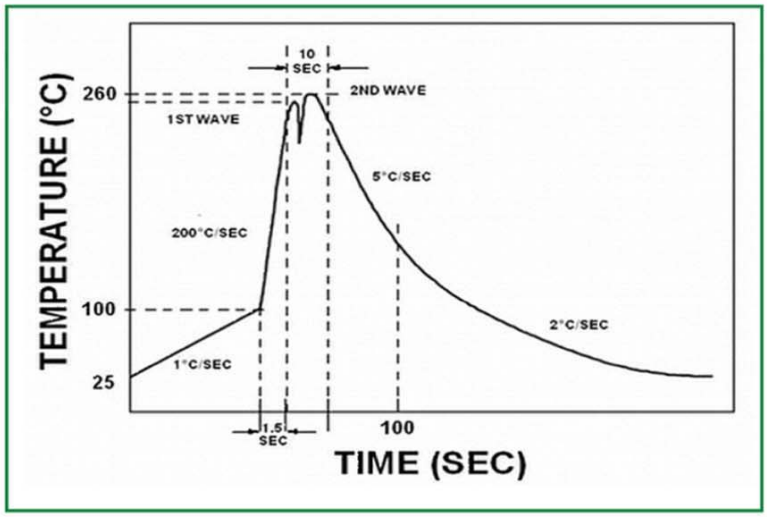

Bel Fuse Inc. 206 Van Vorst Street, Jersey City, NJ 07302 • Tel: 201-432-0463 • Fax: 201-432-9542 • E-Mail: belfuse@belf.com
Website: www.belfuse.com

Type 5MF / 5MFP
Fast Blow Fuse Series

5 x 20mm Glass Tube
RoHS 6 Compliant

Temperature Derating Curve

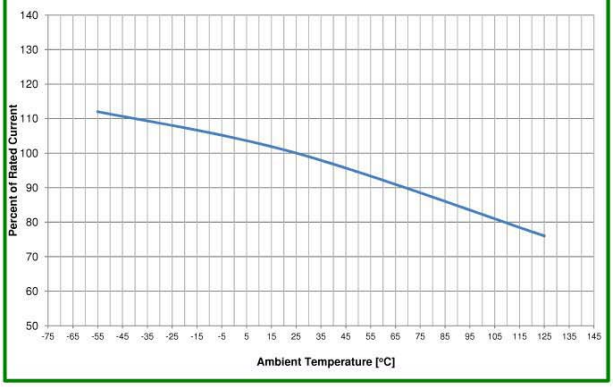

Average Time Current Curve

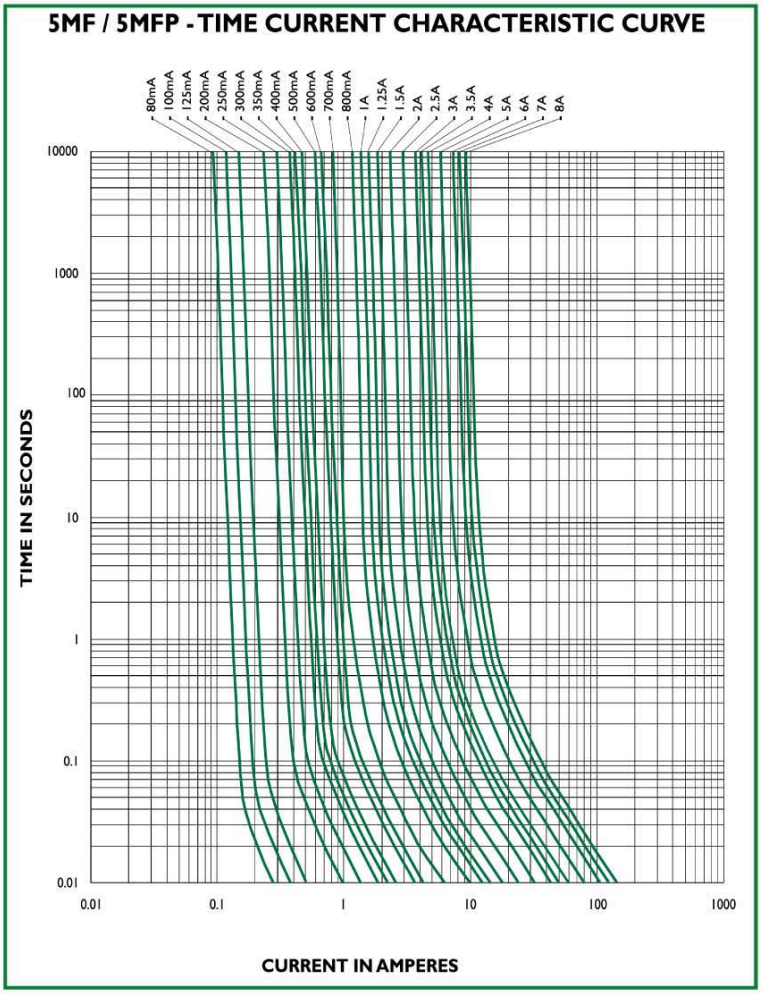

Environmental Specifications

Shock Resistance	MIL-STD-202G, Method 213B, Test Condition I (100 G's peak for 6 milliseconds; Sawtooth Waveform)
Vibration Resistance	MIL-STD-202G, Method 201A (10-55 Hz, 0.06 inch, total excursion).
Salt Spray Resistance	MIL-STD-202G, Method 101E, Test condition B (48 hrs).
Insulation Resistance	MIL-STD-202G, Method 302, Test Condition A (After Opening) 10,000 ohms minimum.
Solderability	MIL-STD-202G, Method 208H
Resistance to solder Heat	MIL-STD-202G Method 210F,Test Condition B.(260+/-5℃,10+/- 1 sec)
Thermal Shock	MIL-STD-202G, Method 107G, Test Condition B (-65℃ to +125℃).
Operating Temperature	-55℃ to +125℃
Terminal Strength	IEC-68-2-21

Bel Fuse Inc. 206 Van Vorst Street, Jersey City, NJ 07302 • Tel: 201-432-0463 • Fax: 201-432-9542 • E-Mail: belfuse@belf.com
Website: www.belfuse.com

Type 5MF / 5MFP
Fast Blow Fuse Series

5 x 20mm Glass Tube
RoHS 6 Compliant

5MF Apr2013D

Physical Specifications

Materials	Body : Glass
	Cap : Nickel Plated Brass Caps
	Leads: Matte Tin Plated Copper
Marking	On Fuse:
	"bel" , "5MF" ," Current Rating","Voltage Rating",
	"Appropriate Safety Logos"," ✔ "(RoHS 6 compliant)
	On label:
	"bel" , "5MF", or "5MFP","Current Rating","Voltage Rating","Interrupting Rating", "Appropriate Safety Logos" and "✔","e" "(China RoHS compliant).

Fuse FGNO Explanation

06XX-[XXXX]-XX, [XXXX]=Ampere Rating

Fraction	Decimal	Milliamps	Bel FGNO[XXXX]
1/32	0.032	32	0032
1/25	.040	40	0040
1/20	.050	50	0050
1/16	.063	63	0063
8/100	.080	80	0080
1/10	.100	100	0100
1/8	.125	125	0125
15/100	.150	150	0150
	.160	160	0160
2/10	.200	200	0200
1/4	.250	250	0250
3/10	.300	300	0300
	.315	315	0315
3/8	.375	375	0375
4/10	.400	400	0400
1/2	.500	500	0500
6/10	.600	600	0600
	.630	630	0630
7/10	.700	700	0700
3/4	.750	750	0750
8/10	.800	800	0800

Fraction	Decimal	Amps	Bel FGNO[XXXX]
	1.0	1	1000
1-1/4	1.25	1.25	1250
1-1/2	1.50	1.5	1500
	1.60	1.6	1600
	2.0	2	2000
2-1/4	2.25	2.25	2250
2-1/2	2.5	2.5	2500
	3.0	3	3000
	3.15	3.15	3150
3-1/2	3.5	3.5	3500
	4.0	4	4000
	5.0	5	5000
	6.0	6	6000
	6.3	6.3	6300
	7.0	7	7000
7-1/2	7.5	7.5	7500
	8.0	8	8000
		10	9100
		12	9120
		15	9150
		20	9200
		25	9250
		30	9300

Mechanical Dimensions

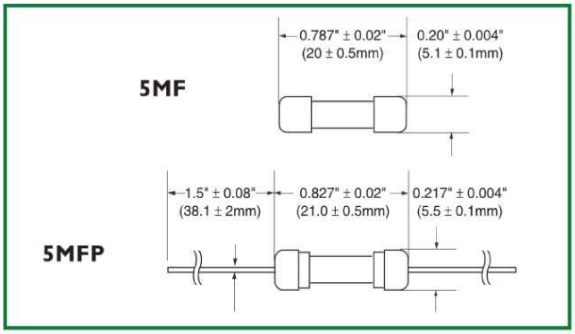

* Ratings 5A and less have 0.032" diameter lead;
Ratings 6A and above have 0.040" diameter lead.

Ordering Information

0651 R XXXX - X X

FUSE TYPE
0651

R = RoHS Compliant

AMPERE RATING
Refer to fuse FGNO explanation table

VOLTAGE CODE
2 = 125 V, for 3.5A – 8A, glass tube.
3 = 250V for 80mA – 3A, glass tube.

QUANTITY & PACKAGING CODE
1 = Cartridge version, 1K /box
3 = Pigtail Version, 1K bulk pack.
6 = Pigtail version, Tape and Reel, 1500/reel.

Specifications subject to change without notice

Packaging

Packaging Option	Packaging Specification	Quantity	Packaging Code	Inside Tape Spacing
Bulk	N/A	1000	31 / 21	N/A
Bulk (Pigtail Type)	N/A	1000	33 / 23	N/A
Tape & Reel, 10 mm Pitch	EIA-296-F	1500	73 / 26	63

CORPORATE OFFICE
Bel Fuse Inc.
206 Van Vorst Street
Jersey City, NJ 07302
Tel 201-432-0463
Fax 201-432-9542
E-Mail: belfuse@belf.com
Website: www. belfuse.com

FAR EAST OFFICE
Bel Fuse Ltd.
8/F Luk Hop Industrial Building
8 Luk Hop Street
San Po Kong
Kowloon, Hong Kong
Tel 852-2328-5515
Fax 852-2352-3706

EUROPE OFFICE
Bel Fuse Europe Ltd.
Preston Technology Management Centre
Marsh Lane, Suite F15
Preston, Lancashire, PR1 8UQ
United Kingdom
Tel 44-1772-556601
Fax 44-1772-561008

EUROPE
Bel Stewart GmbH
Industriestrasse 20
61381 Friedrichsdorf
Germany
Tel 49-6172-9552-0
Fax 49-6172-9552-40