Model 5911B
Maxigrabber Test Clip Set
With Hook

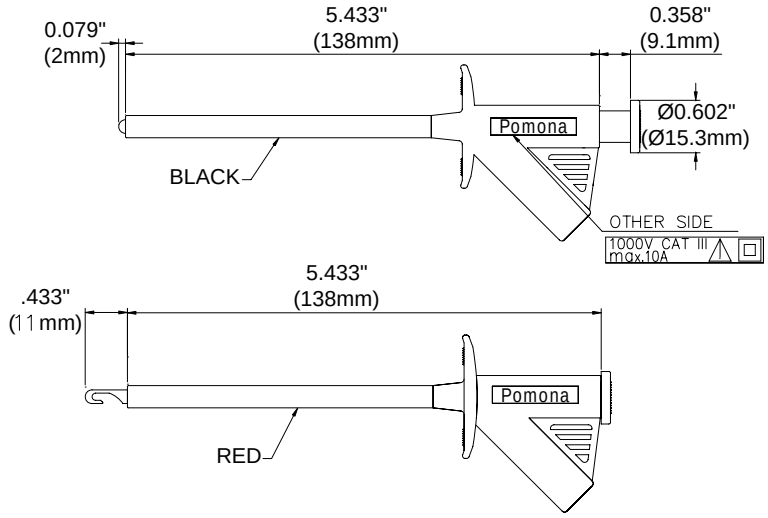

FEATURES:

- Maxigrabber® test clip has been redesigned to meet IEC 1010-2-31. This is the latest international safety standard for test accessories.
- The long shaft is ideal for electronic, electrical and industrial applications where access to hard to reach high voltage test points is a requirement.
- The Tip Guard is Stainless Steel for tip durability..
- Safety sheathed jack mates to Pomona's 5907A, 5908A and 5909A Flexible Test Leads for Digital Multi-Meter interfacing.

MATERIALS:

Hook: Beryllium Copper, Nickel Plated
Plunger, Housing: Polypropylene, Color: One Black, One Red
Banana Jack: Body - Brass, Nickel Plated
Compression Spring: Stainless Steel

RATING:

IEC 1010, Category III, P2 Compliant
Operating Voltage: 1000 VRMS/DC
Operating Current: 10 Amperes Max.

ORDERING INFORMATION: Model 5911B (Includes Set of one black and one red)
The Maxigrabber® Test Clip is also available in various Pomona DMM Test Kits.

All dimensions are in inches. Tolerances (except noted): .xx = ±.02" (,51 mm), .xxx = ± .005" (,127 mm).
All specifications are to the latest revisions. Specifications are subject to change without notice.
Registered trademarks are the property of their respective companies.

Sales: 800-490-2361 Fax: 888-403-3360 Technical Assistance: 800-241-2060
For "Where to Buy" information, visit the Pomona web site at www.pomonaelectronics.com

Rev: 100
D1094577