Pomona®

Model 5894
56 Pin SSOP Test Clip
0.025 Inch Pitch

These new test clips provide the user with an easy means to connect instruments to the fine pitch plastic SSOP chip leads.

- Interfaces with high density SSOP surface mount chip leads.
- Locking feature insures positive retention on the chip in either vertical or horizontal position.
- SSOP chip lead numbers are marked on the top of the board.
- Gold plated connector pins and contacts assure noise free connections.

Pomona's SSOP test clips are perfect for system design, field service testing and failure analysis.

The locking mechanism holds the clip on the device by gripping the chip body at the ends of the chip. Each contact is individually cantilevered to assure positive contact.

The top interface has standard .025" square pins at .100" x .100" spacing. Perfect for use with most logic analyzers.

Other clips are available in many sizes to fit the most popular SSOP chips now in use. See Pomona's full line catalog for information on test clips for other sizes.

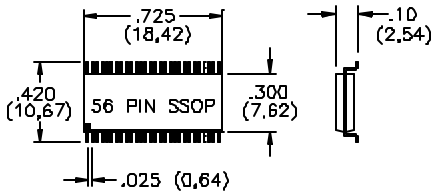

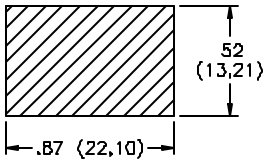

BOARD LEVEL FOOTPRINT

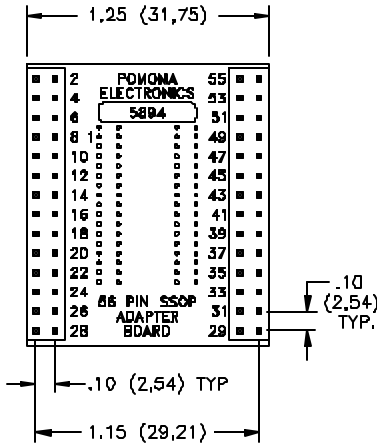

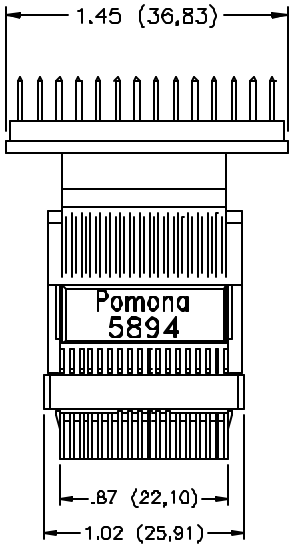

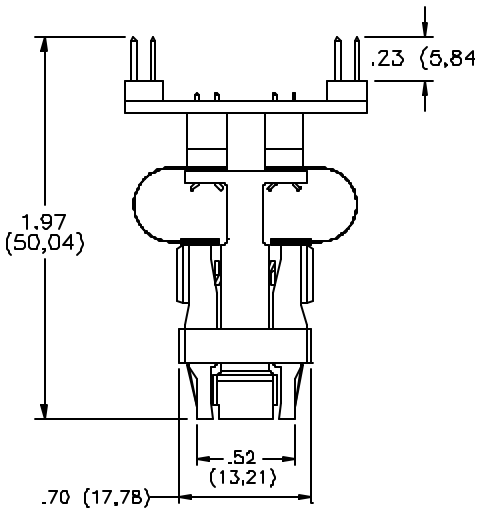

All dimensions are in inches. Tolerances (except noted): .xx = ±.02" (,51 mm), .xxx = ± .005" (,127 mm).
All specifications are to the latest revisions. Specifications are subject to change without notice.
Registered trademarks are the property of their respective companies. Made in USA

Sales: 800-490-2361 Fax: 888-403-3360
Technical Assistance: 800-241-2060