DETAIL A
SCALE 1 / 2
END VENTS

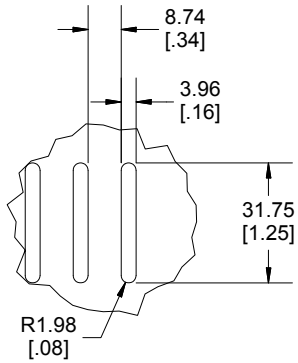

TOP VIEW OF ENCLOSURE

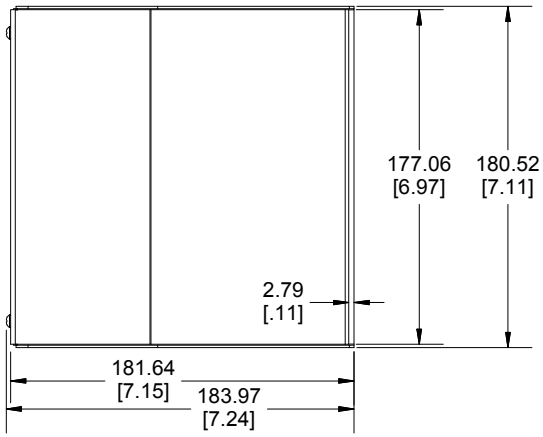

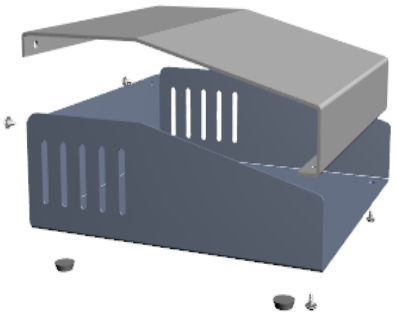

BACK VIEW OF ENCLOSURE

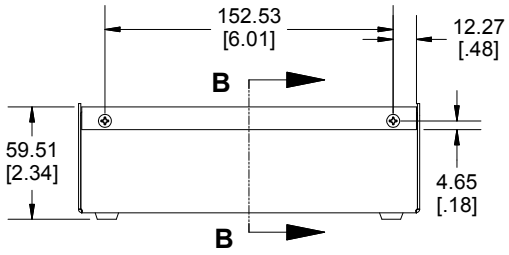

END VIEW OF ENCLOSURE

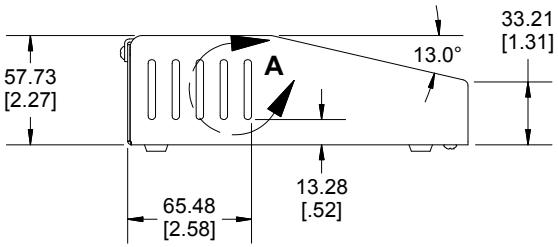

FRONT VIEW OF ENCLOSURE

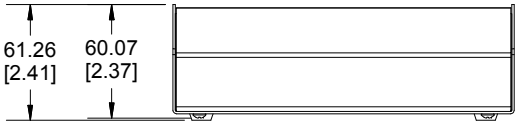

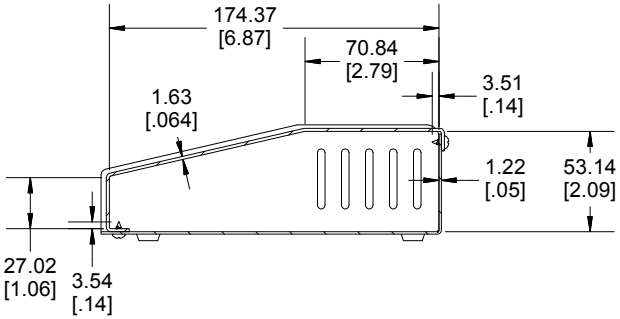

SECTION B-B
END OF ENCLOSURE

BOTTOM VIEW OF ENCLOSURE

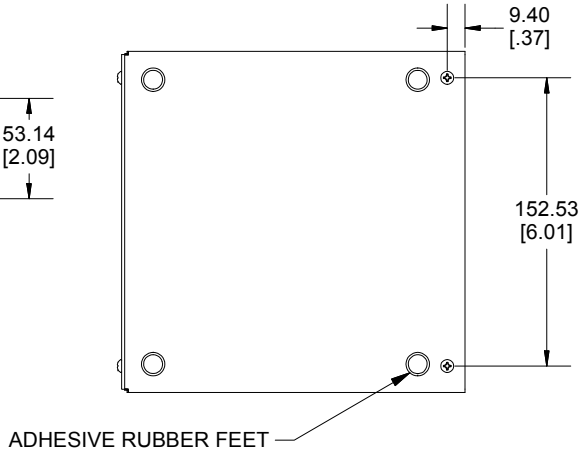

Enclosures can be Factory Modified (Milling, Drilling, Printing etc.)
Contact Factory mjm@hammondmfg.com for quotes
Solid models of this enclosure available in STEP or IGES.

NOTE
Case Includes Adhesive Rubber Feet and Required Hardware.
Enclosure Case is Made of 0.05" Steel.
Top Panel is Made of 0.064" Aluminum.

PART NUMBERS	
500-0930 Enclosure	
Smooth Light Grey Top Case Dark Satin Grey Base Case	500-0930
ACCESSORIES	
Plated Cover Screws (Pkg 50) [#6 x 1/4 Self Tapping]	**SC19482-50**
Grey Self-Adhesive Rubber Feet (Pkg 4)	**1421T2GY**

Dimensions:
mm
[inches]

HAMMOND MANUFACTURING™

500-0930

www.hammondmfg.com