REV.	CNN	CNN DESCRIPTION	Date	Check in
01	-	-	04/07/2013	Shaun Barron
01	-	-	04/07/2013	Shaun Barron

Die cast aluminium enclosures sealed to
BS EN 60529:1992 IP66 / IP67

- 3mm One piece Die cut Silicone Rubber Sponge 01-255FR Seal
- Seal has Self Adhesive Backing. 01-255SAB Suitable for-60˚c to 240˚c.
- Min seal thickness 3.0mm - min seal frame width 3.5mm
- Min enclosure wall thickness 3mm
- Min enclosure lid thickness 3mm
- Enclosure has integrated PCB guides & Standoffs
- Enclosure has integrated earth fixing points & comes supplied with brass shake proof screws
- Enclosure can be supplied machined to your specification

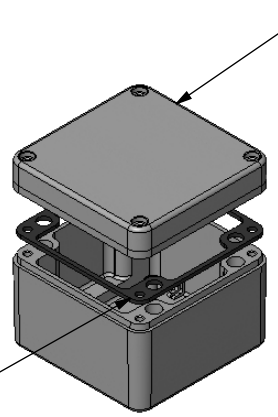

				PART NUMBERS		
Length	Width	Height	Lid Fixing holes Qty	Un-Painted	Powder Coat	Nylon Coat
125	125	80	4	486-121208-66	487-121208*-66	488-121208*-66
125	125	90	4	486-121209-66	487-121209*-66	488-121209*-66
130	80	60	4	486-130806-66	487-130806*-66	488-130806*-66
160	160	90	4	486-161609-66	487-161609*66	488-161609*-66
220	120	80	4	486-221208-66	487-221208*-66	488-221208*-66
220	120	90	4	486-221209-66	487-221209*-66	488-221209*-66
260	160	90	4	486-261609-66	487-261609*-66	488-261609*66
260	160	120	4	486-261612-66	487-261612*-66	488-261612*-66
Box Dimensions in mm				Colour Option - Colour suffix * - Grey= A / Blue= B / Black= E		

Lid Fixings
Supplied with
Stainless steel SS304
M6 x 25mm long
Captive screws

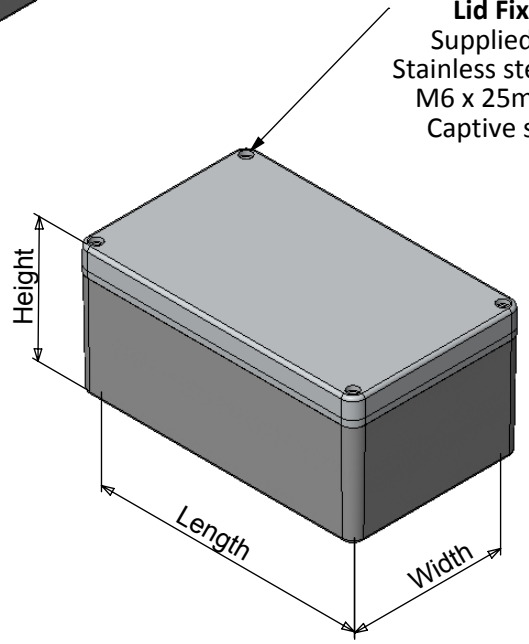

Tel No. +44(0)1724 273200 Website www.dem-uk.com

PROPRIETARY AND CONFIDENTIAL
THE INFORMATION CONTAINED IN THIS DRAWING IS THE SOLE PROPERTY OF ALPHA 3 MANUFACTURING.
ANY REPRODUCTION IN PART OR AS A WHOLE WITHOUT THE WRITTEN PERMISSION OF ALPHA 3 MANUFACTURING IS PROHIBITED.

DEM Manufacturing, Deltron Emcon House
Hargreaves Way, Sawcliffe Ind. Park,
Scunthorpe, North Lincolnshire, DN15 8RF, UK

UNLESS OTHERWISE SPECIFIED:
DIMENSIONS ARE IN MILLIMETRES.
TOLERANCE:
NO DECIMAL PLACES ±0.2mm
1 DECIMAL PLACE ±0.1mm
2 DECIMAL PLACES ±0.05mm
ANGULAR TOLERANCE: ±1°

FINISH See Note
-
-
DEBURR AND BREAK SHARP EDGES
IF IN DOUBT ASK
DO NOT SCALE DRAWING
MATERIAL LM24

DRAWN BY SPB
APPROVED BY WC
THIRD ANGLE PROJECTION
SHEET 1 OF 1
SCALE 1:5
A4

TITLE General Specification
For Deltron's IP66 / IP67
Heavy Duty Enclosure
DRAWING NO. 486-IP66-IP67 Heavy duty range
ISSUE 01
Release