IP68 General Purpose Enclosures
Technical Specification

Sealed to IP68, this series is ideal for placement in demanding environments where protection may be required for complete immersion in water of up to 5 metres for 1 hour.

15 sizes are available, complete with silicone gasket, captive screws, earth screws and PCB guides on selected sizes. Nine sizes are also available with flanges for easy mounting.

Deltron Enclosures can customise any enclosure in our UK factory, including machining, painting, finishing, component sourcing and installation to meet your specification, save time and cut your costs. View our Services page on our website for more information.



For more information:

Phone: +44 (0)1724 273206

Features:

- IP68 Rated
- Manufactured from ADC12
- Certified to BS EN 60529:1992
- RoHS Compliant
- Silicone Seal

Typical Applications:

- Marine
- Water Treatment
- Security
- Food Processing
- Leisure Facilities

Available Dimensions (mm):

90 x 36 x 30*	115 x 64 x 30*
115 x 90 x 55*	115 x 65 x 55*
172 x 121 x 55*	172 x 121 x 106*
223 x 147 x 55*	223 x 147 x 106
275 x 176 x 65	141 x 102 x 76*
166 x 128 x 76	121 x 101 x 35*
251 x 251 x 99	81 x 56 x 25
61 x 56 x 30	*= Available with Flanges

Finishes: Plain Aluminium, Powder or Nylon coat.
Coating Colours: Grey, Blue or Black.
Spares: Gaskets and Screws.

Or choose to have your enclosure customised for bespoke finishes and colours.

DELTRON Enclosures

DEM Manufacturing
Deltron Emcon House,
Hargreaves Way,
Sawcliffe Industrial Park,
Scunthorpe, DN15 8RF.

Web: www.dem-uk.com/deltron-enclosures
Tel: +44 (0) 1724 273206
Fax: +44 (0) 1724 280353
Email: sales@dem-uk.com

REV	DATE	ECN NUMBER	ECR COMMENT
003	06 Jun 2017	C03614	TORQUE SETTINGS ADDED

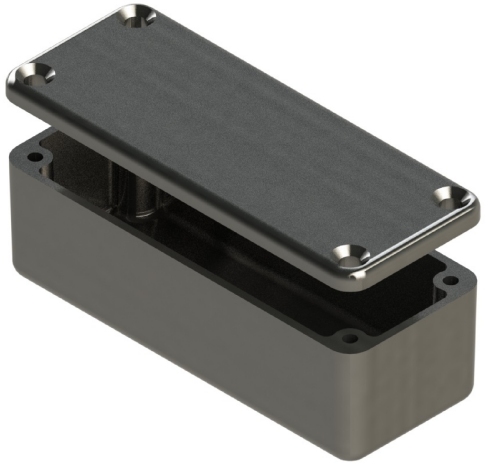

LENGTH	WIDTH	HEIGHT	SEAL	TORQUE SETTINGS	PLAIN	POWDER COAT	NYLON COAT
90	36	30	NONE	NONE	459-0010	461-0010*	462-0010*
			IP66	0.3Nm	460-0010	453-0010*	454-0010*
			IP68	0.7Nm	480-0010	481-0010*	482-0010*
			IP68 EMI/RFI	1.0Nm	480-C010	481-C010*	482-C010*
BOX DIMENSION IN MM			COLOUR OPTION - COLOUR SUFFIX * GREY=A / BLUE=B / BLACK = E				

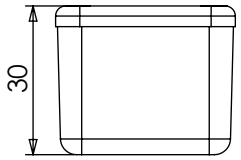

STANDARD DUTY ENCLOSURE

- Material grade ADC12/LM2 Die Cast Alloy
- IP Rated available
- Min wall thickness 1.5mm
- Min lid thickness 1.5mm
- Fine textured powder coating and smooth nylon
- Screws stainless steel
- IP68 Tested to 5 metres for 1 hour
- Enclosures can be supplied fully factory customised to your specification

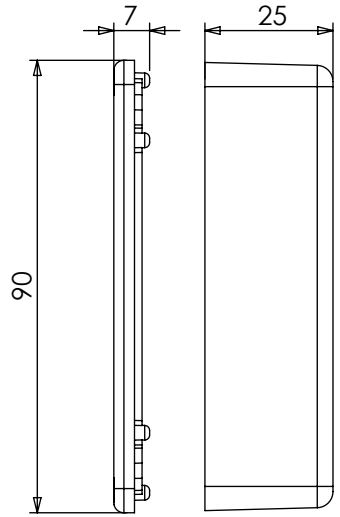

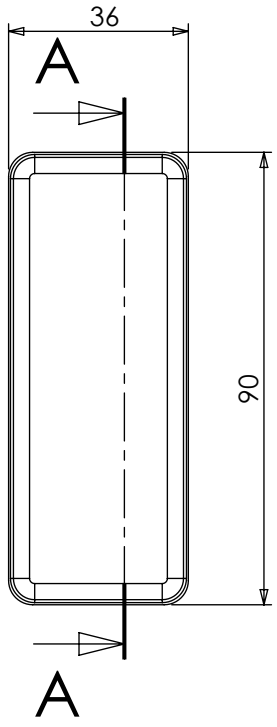

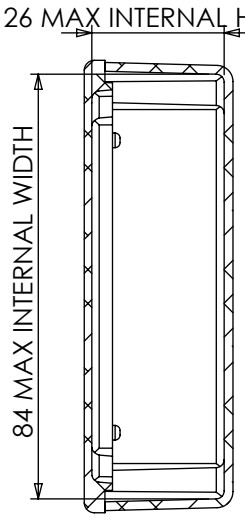

SECTION A-A

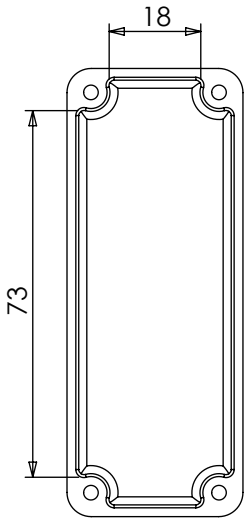

DELTRON Components | DELTRON Enclosures | ROXBURGH EMC | b|e|s | DEM | Alpha3 manufacturing

+44(0)1724 273200 | www.dem-uk.com

PROPRIETARY AND CONFIDENTIAL:

THE INFORMATION CONTAINED IN THIS DRAWING IS THE SOLE PROPERTY OF **ALPHA 3 MANUFACTURING**. ANY REPRODUCTION IN PART OR AS A WHOLE WITHOUT THE WRITTEN PERMISSION OF **ALPHA 3 MANUFACTURING** IS PROHIBITED.

DEM Manufacturing is a division of Alpha 3 Manufacturing LTD

DEM Manufacturing, Deltron Emcon House, Hargreaves Way, Sawcliffe Ind. Park, Scunthorpe, North Lincolnshire, DN15 8RF, UK

UNLESS OTHERWISE SPECIFIED DIMENSIONS ARE IN MILLIMETRES
LINEAR & RADIAL TOLERANCE:
NO DECIMAL PLACES
1 DECIMAL PLACE
2 DECIMAL PLACES
ANGULAR TOLERANCE:

IF IN DOUBT ASK! DO NOT SCALE DRAWING!

FINISH: SEE NOTES
MATERIAL: ALUMINIUM ALLOY

THE FINISHED PRODUCT SHOULD BE CLEAN AND FREE FROM ALL LIQUIDS AND DEBRIS. SURFACES SHOULD BE OF UNIFORM APPEARANCE FREE FROM SHARP EDGES, BURRS AND CORROSION

AUTHOR	Alex Yau
EDITOR	DT
APPROVER	DT
THIRD ANGLE PROJECTION	
SHEET 1 OF 1	
SCALE 1:1.5	A4

TITLE	PLAIN ENCLOSURE
FILE	A ENCLOSURE
PART	BOX & LID ASSEMBLY
ISSUE/REV.	003
VERSION	15
RELEASED	
EDIT DATE	06 Jun 2017