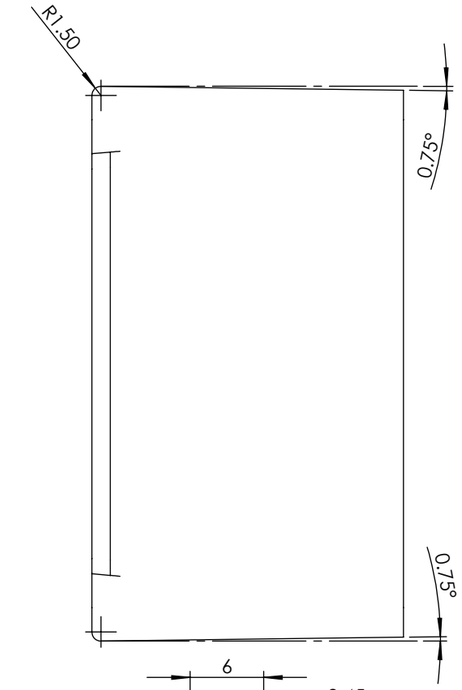

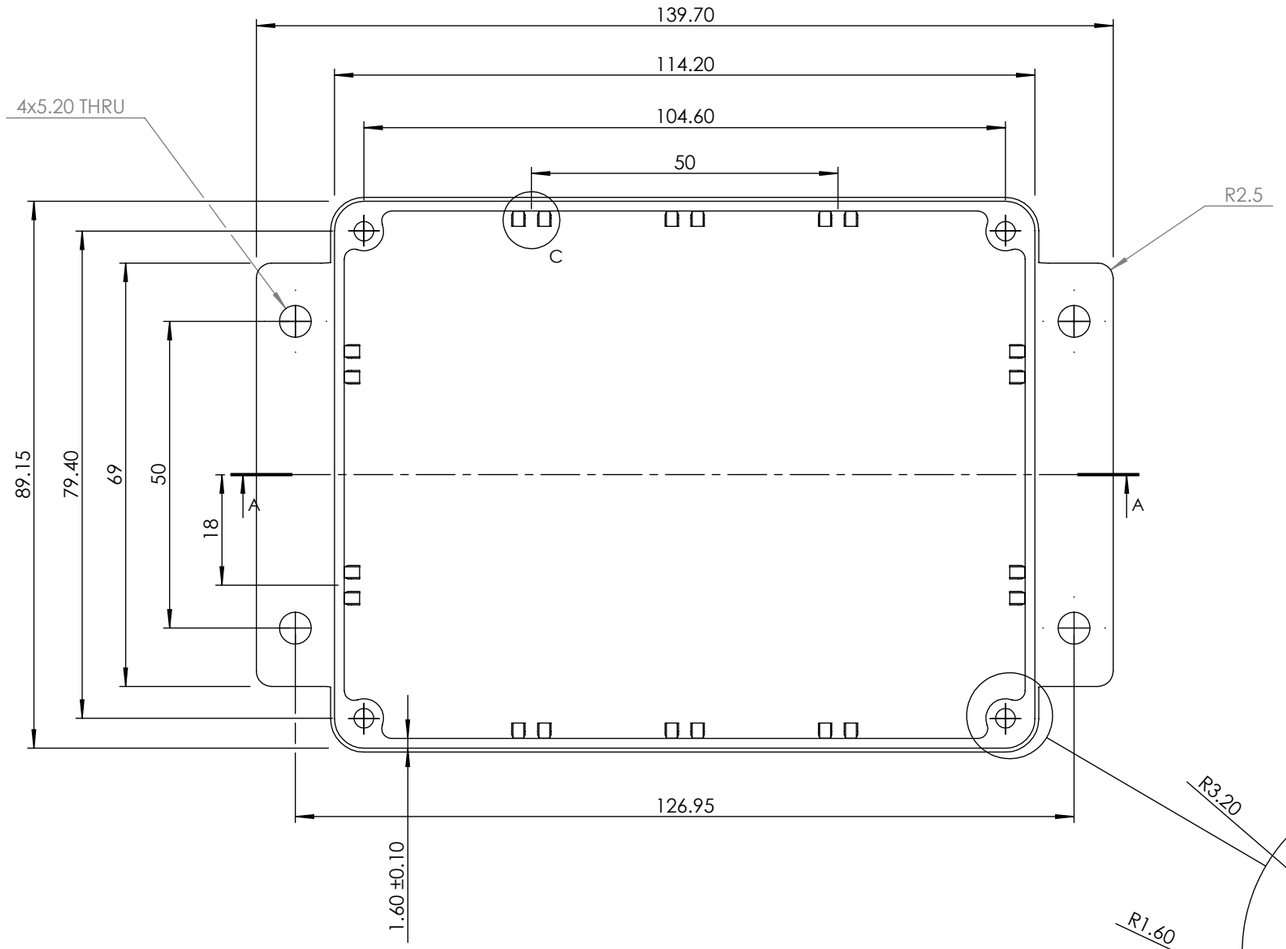

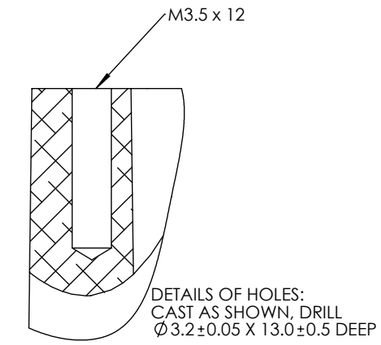

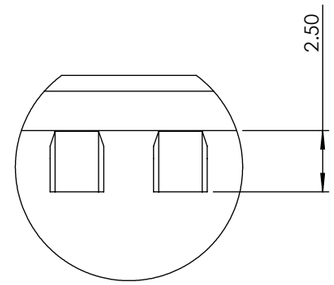

DETAIL C
SCALE 4 : 1

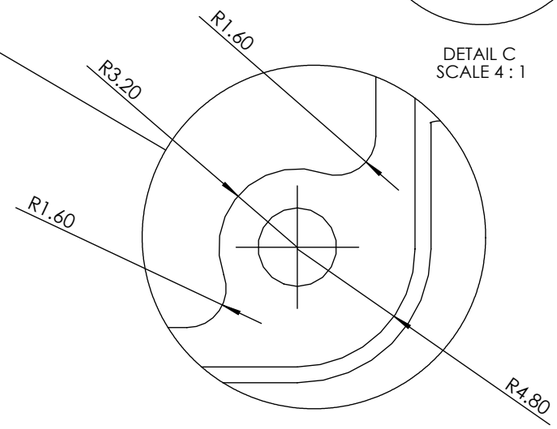

DETAIL B
SCALE 4 : 1

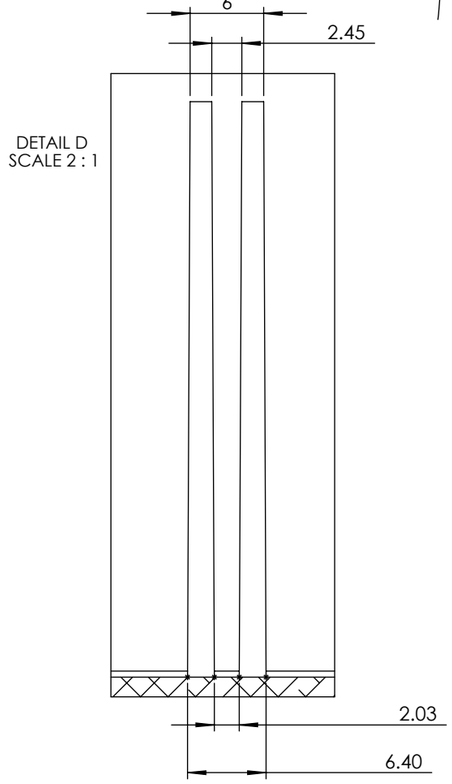

DETAIL D
SCALE 2 : 1

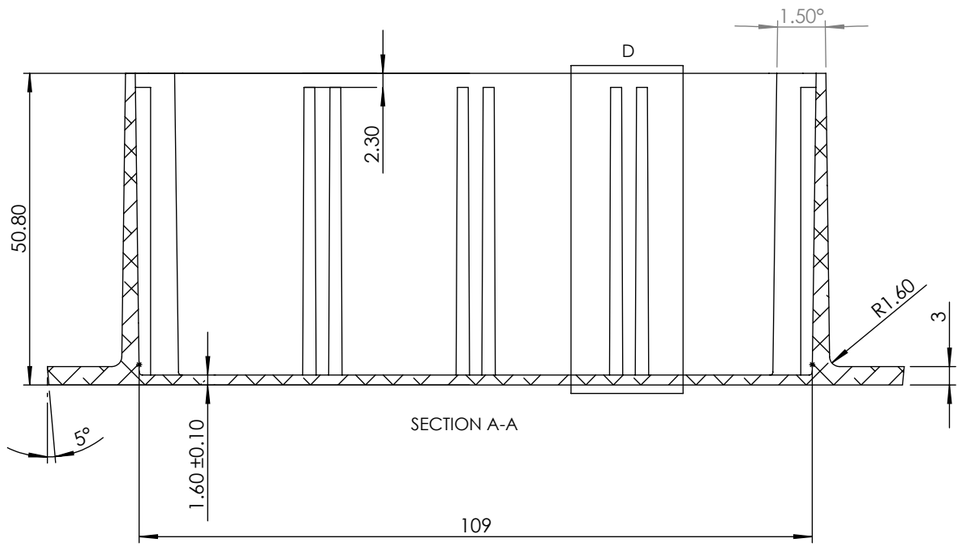

SECTION A-A

		FLANGED	
SIZE	PLAIN	POWDER COATED	NYLON COATED
C	455-0030	457-0030	458-0030
	SEALED	FLANGED	
C	456-0030	463-0030	464-0030

Tel No.+44(0)1724273200 Website www.dem-uk.com

PROPRIETARY AND CONFIDENTIAL
THE INFORMATION CONTAINED IN THIS DRAWING IS THE SOLE PROPERTY OF **ALPHA 3 MANUFACTURING**.
ANY REPRODUCTION IN PART OR AS A WHOLE WITHOUT THE WRITTEN PERMISSION OF **ALPHA 3 MANUFACTURING** IS PROHIBITED.

DEM Manufacturing, Deltron Emcon House
Hargreaves Way, Sawcliffe Ind. Park,
Scunthorpe, North Lincolnshire, DN15 8RF, UK

UNLESS OTHERWISE SPECIFIED:
DIMENSIONS ARE IN MILLIMETRES
LINEAR TOLERANCE:
NO DECIMAL PLACES ±0.5mm
1 DECIMAL PLACE ±0.25mm
2 DECIMAL PLACES ±0.125mm
ANGULAR TOLERANCE: ±1°

FINISH .
. .
. .
DEBURR AND BREAK SHARP EDGES
IF IN DOUBT ASK
DO NOT SCALE DRAWING
MATERIAL DieCast Aluminium Alloy

DRAWN BY B.SILLENCE
APPROVED BY B.SILLENCE
THIRD ANGLE PROJECTION
SHEET 1 OF 1
SCALE 1:1
A3

TITLE PROCUREMENT SPECIFICATION FOR 'C' FLANGED BOX
DRAWING NO. C BOX FLANGED
ISSUE 02
Release