119mm Compact Fan



- With electronic protection against reverse polarity. The fan only operates when the polarity is correct. Impedance-protected against locked rotor and overloading.
- Fan of fibreglass reinforced plastic. PBT housing, PA impeller.
- Air exhaust over struts. Rotational direction CCW looking at rotor.
- Fitted with 3 pin molex connector (22-01-2035)
- Sensor signal for speed monitoring

Part Number	Air flow @ free air	Air flow @ free air	Nominal voltage	Nominal range	Noise	Sintec-sleeve bearings	Power input	Nominal speed	Max. Ambient Temperature	Service life L^{10} @40°C / @ t max	Dimension
	m^3/h	CFM	VDC	VDC	dB(A)		Watt	min^{-1}	°C	Hours	A
4412F/2GL-489	91	54	12	7...15	26	Yes	1.2	1600	-20...+75	80,000/35,500	323
4412F/2M-504	137	81	12	6...13	38	Yes	3.0	2400	-20...+75	70,000/30,000	413
4412F/2GLL-515	68	40	12	7...15	26	Yes	0.7	1200	-20...+75	84,000/37,500	323

Subject to alterations

Dimensions

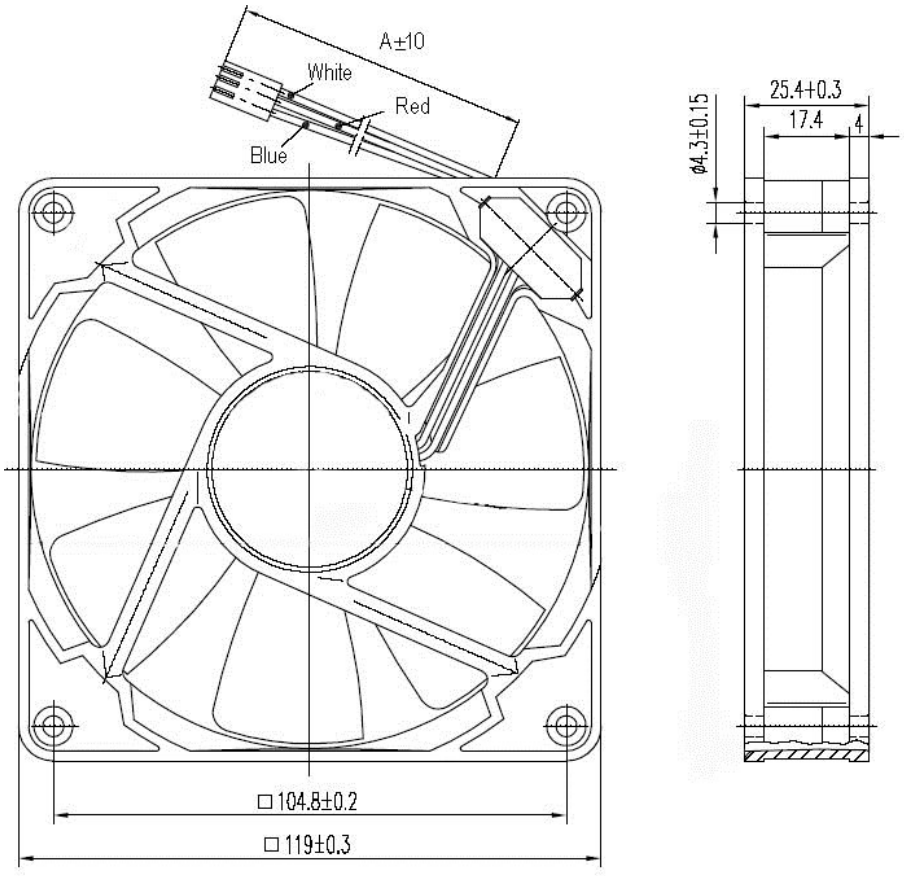

ebm-papst UK Ltd, Chelmsford Business Park, Chelmsford, Essex, CM2 5EZ
01245 468555 sales@uk.ebmpapst.com www.ebmpapst.co.uk