RoHS

3SB Apr2013D

# Type 3SB / 3SBP
## *Slow Blow Fuse Series*

6 x 32 mm Glass Tube
*RoHS 6 Compliant*

### 3SB / 3SBP Series, 6 x 32mm Slow Blow Fuse

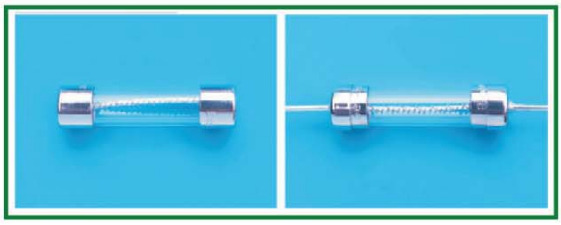

### *Description*

**6x32mm Slow Blow,glass tube body cartridge fuse designed, approved and complied with UL and CSA standard 248-14.**

### *Features*

- **Meet UL and CSA standard 248-14**
- **Wide operating temperature range**
- **Bulk and Tape & Reel packing available**
- **RoHS6 compliant**
- **Halogen Free**
- **Leadfree**

### *Applications*

**Provide individual protection for components or internal circuits.**

- **Power Supplies**
- **Battery charger**
- **Monitor**
- **Adapter**

LEAD FREE = Pb

HALOGEN FREE = HF

### *Electrical Characteristics (UL / CSA STD.248-14)*

| Testing current | Blow Time | |
|---|---|---|
| | Minimum | Maximum |
| 100% | 4 Hrs. | N/A |
| 135% | N/A | 1 Hr |
| 200% | 5 sec | 30 sec |

### *Safety Agency Approvals*

| SAFETY AGENCY | SAFETY AGENCY CERTIFICATE NUMBER | AMPERE RANGE / VOLT @ I.R.ABILITY |
|---|---|---|
| c UL us | E20624 | 63mA -8A / 125V AC @10,000A<br>63mA - 8A / 250V AC @200A<br>8.1A - 15A / 125V AC @10,000A |
| CSA | LR39772 | 63mA -1A / 250V AC @35A<br>>1A - 3.5A / 250V AC @100A<br>>3.5A - 8A / 250V AC @200A<br>8.1A - 15A / 125V AC @10,000A |
| PS E | JET 1037-31003-1010<br>JET 1037-31003-1011 | 1A - 5A / 125V AC @500A |
| | JET 1037-31003-1007 | >5A - 15A / 125V AC @300A |
| CE | | 63mA -8A / 125V AC @10,000A<br>63mA - 8A / 250V AC @200A<br>8.1A - 15A / 125V AC @10,000A |

*Specifications Subject to change without notice.*

**Bel Fuse Inc.** 206 Van Vorst Street, Jersey City, NJ 07302 • Tel: 201-432-0463 • Fax: 201-432-9542 • E-Mail: belfuse@belf.com
Website: www.belfuse.com

# Type 3SB / 3SBP

***Slow Blow Fuse Series***

**6 x 32 mm Glass Tube**

***RoHS 6 Compliant***

HF Pb

bel

*3SB Apr2013D*

## *Electrical Specifications*

| Catalog Number | Ampere Rating | Typical Cold Resistance (ohm) | Volt-drop @100% In (Volt) Max. | Voltage Rating (V) | Interrupting Rating | Melting I2T <10 m Sec (A2 Sec) | Melting I2T @ 10 In (A2 Sec) | Maximum Power Dissipation (W) | Agency Approvals | | | |
|---|---|---|---|---|---|---|---|---|---|---|---|---|
| | | | | | | | | | c UL us | CSA | PSE | CE |
| 3SB(P) 63-R | 63mA | 75.5 | 7.33 | 250 | 63mA -8A / 125V AC @10,000A<br>63mA - 8A / 250V AC @200A<br>8.1A - 15A / 125V AC @10,000A | 0.09 | 0.10 | 0.7 | Y | Y | | Y |
| 3SB(P) 80-R | 80mA | 48.4 | 6.27 | 250 | | 0.13 | 0.15 | 0.7 | Y | Y | | Y |
| 3SB(P) 100-R | 100mA | 29.4 | 4.41 | 250 | | 0.21 | 0.24 | 0.5 | Y | Y | | Y |
| 3SB(P) 125-R | 125mA | 17.5 | 3.45 | 250 | | 0.32 | 0.37 | 0.6 | Y | Y | | Y |
| 3SB(P) 160-R | 160mA | 12.3 | 3.13 | 250 | | 0.50 | 0.58 | 0.6 | Y | Y | | Y |
| 3SB(P) 200-R | 200mA | 7.1 | 2.13 | 250 | | 0.77 | 0.91 | 0.6 | Y | Y | | Y |
| 3SB(P) 250-R | 250mA | 5.0 | 1.97 | 250 | | 1.2 | 1.4 | 0.6 | Y | Y | | Y |
| 3SB(P) 300-R | 300mA | 3.2 | 1.52 | 250 | | 1.9 | 2.2 | 0.7 | Y | Y | | Y |
| 3SB(P) 375-R | 375mA | 2.14 | 1.26 | 250 | | 2.6 | 3.2 | 0.7 | Y | Y | | Y |
| 3SB(P) 500-R | 500mA | 1.38 | 1.07 | 250 | | 4.4 | 5.4 | 0.8 | Y | Y | | Y |
| 3SB(P) 750-R | 750mA | 0.642 | 0.68 | 250 | | 9 | 10 | 0.8 | Y | Y | | Y |
| 3SB(P) 1-R | 1A | 0.374 | 0.59 | 250 | | 16 | 21 | 0.9 | Y | Y | Y | Y |
| 3SB(P) 1.25-R | 1.25A | 0.248 | 0.43 | 250 | | 25 | 32 | 0.9 | Y | Y | Y | Y |
| 3SB(P) 1.6-R | 1.6A | 0.155 | 0.38 | 250 | | 39 | 50 | 1.0 | Y | Y | Y | Y |
| 3SB(P) 2-R | 2A | 0.115 | 0.36 | 250 | | 61 | 79 | 1.0 | Y | Y | Y | Y |
| 3SB(P) 2.5-R | 2.5A | 0.079 | 0.29 | 250 | | 94 | 123 | 1.1 | Y | Y | Y | Y |
| 3SB(P) 3-R | 3A | 0.058 | 0.27 | 250 | | 146 | 192 | 1.1 | Y | Y | Y | Y |
| 3SB(P) 4-R | 4A | 0.039 | 0.23 | 250 | | 226 | 300 | 1.2 | Y | Y | Y | Y |
| 3SB(P) 5-R | 5A | 0.029 | 0.22 | 250 | | 349 | 469 | 1.3 | Y | Y | Y | Y |
| 3SB(P) 6-R | 6A | 0.018 | 0.19 | 250 | | 286 | 455 | 1.6 | Y | Y | Y | Y |
| 3SB(P) 7-R | 7A | 0.016 | 0.18 | 250 | | 372 | 592 | 1.8 | Y | Y | Y | Y |
| 3SB(P) 8-R | 8A | 0.013 | 0.17 | 250 | | 483 | 769 | 1.9 | Y | Y | Y | Y |
| 3SB(P) 10-R | 10A | 0.010 | 0.17 | 125 | | 817 | 1300 | 2.3 | Y | Y | Y | Y |
| 3SB(P) 12-R | 12A | 0.008 | 0.15 | 125 | | 1277 | 2031 | 2.6 | Y | Y | Y | Y |
| 3SB(P) 15-R | 15A | 0.006 | 0.15 | 125 | | 2123 | 3377 | 3.0 | Y | Y | Y | Y |

***Consult manufacturer for other ratings***

## *Soldering Parameters*

| Lead-free Wave Soldering Profile | |
|---|---|
| Wave Soldering Parameter | |
| Average ramp-up rate | 200°C / second |
| Heating rate during preheat | typical 1 - 2 °C / second<br>Max. 4°C/ second |
| Final preheat temperature | within 125°C of soldering temperature |
| Peak temperature Tp | 260°C |
| Time within +0 °C / -5°C of actual peak temperature | 10 seconds |
| Ramp-down rate | 5 °C / second max. |

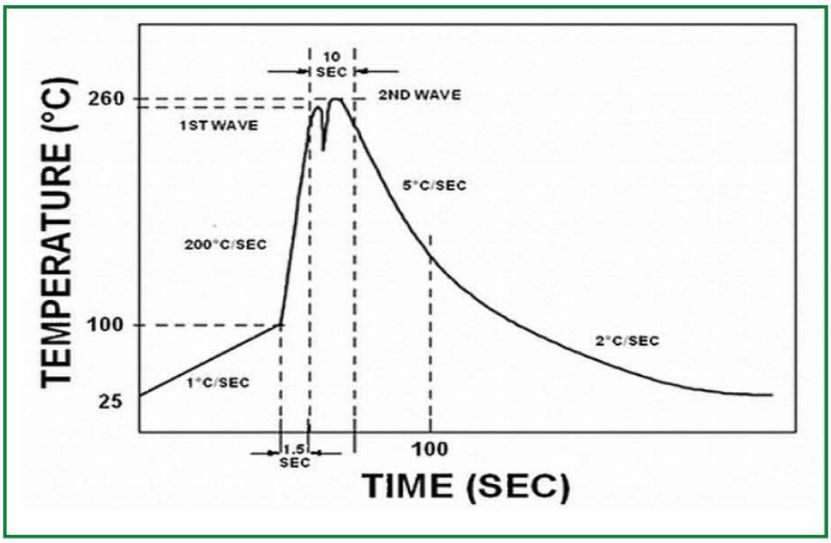


**Bel Fuse Inc.** 206 Van Vorst Street, Jersey City, NJ 07302 • Tel: 201-432-0463 • Fax: 201-432-9542 • E-Mail: belfuse@belf.com
Website: www.belfuse.com

# Type 3SB / 3SBP

***Slow Blow Fuse Series***

6 x 32 mm Glass Tube
*RoHS 6 Compliant*
HF Pb

bel

*3SB Apr2013C*

## *Temperature Derating Curve*

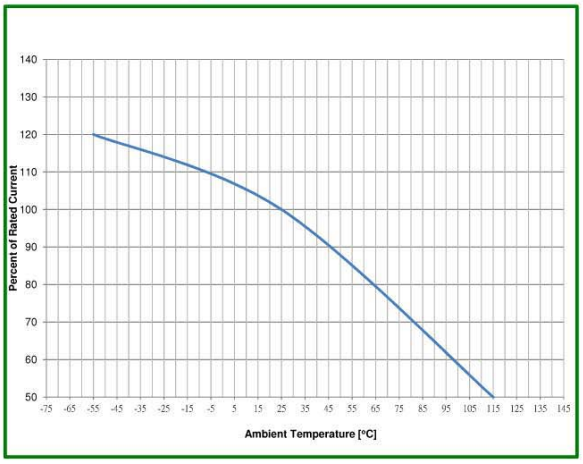


## *Average Time Current Curve*

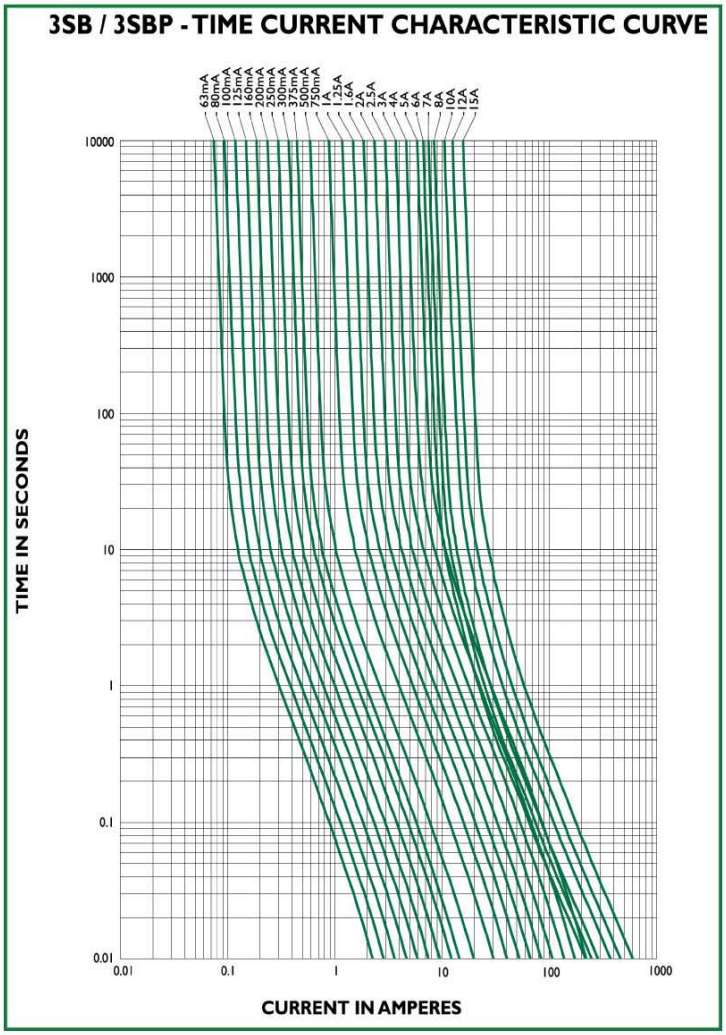


## *Environmental Specifications*

| | |
|---|---|
| **Shock Resistance** | MIL-STD-202G, Method 213B, Test Condition I<br>(100 G's peak for 6 milliseconds; Sawtooth Waveform) |
| **Vibration Resistance** | MIL-STD-202G, Method 201A (10-55 Hz, 0.06 inch, total excursion). |
| **Salt Spray Resistance** | MIL-STD-202G, Method 101E, Test condition B (48 hrs). |
| **Insulation Resistance** | MIL-STD-202G, Method 302, Test Condition A<br>(After Opening) 10,000 ohms minimum. |
| **Solderability** | MIL-STD-202G, Method 208H |
| **Resistance to solder Heat** | MIL-STD-202G Method 210F,Test Condition B.(260+/-5℃,10+/-1 sec) |
| **Thermal Shock** | MIL-STD-202G, Method 107G, Test Condition B<br>(-65℃ to +125℃). |
| **Operating Temperature** | -55℃ to +125℃ |
| **Terminal Strength** | IEC-68-2-21 |

**Bel Fuse Inc.** 206 Van Vorst Street, Jersey City, NJ 07302 • Tel: 201-432-0463 • Fax: 201-432-9542 • E-Mail: belfuse@belf.com
Website: www.belfuse.com

# Type 3SB / 3SBP
## *Slow Blow Fuse Series*

6 x 32 mm Glass Tube
*RoHS 6 Compliant*

*3SB Apr2013D*

### *Physical Specifications*

| | |
|---|---|
| **Materials** | Body : Glass |
| | Cap : Nickel Plated Brass Caps |
| | Leads: Matte Tin Plated Copper |
| **Marking** | On Fuse: |
| | "bel" , "3SB" ," Current Rating","Voltage Rating", |
| | "Appropriate Safety Logos"," ✔ "(RoHS 6 compliant) |
| | On label: |
| | "bel" , "3SB", or "3SBP","Current Rating","Voltage Rating","Interrupting Rating", "Appropriate Safety Logos" and " ","e "(China RoHS compliant). |

### *Fuse FGNO Explanation*
*06XX-[XXXX]-XX, [XXXX]=Ampere Rating*

| Fraction | Decimal | Milliamps | Bel FGNO[XXXX] |
|---|---|---|---|
| 1/32 | 0.032 | 32 | 0032 |
| 1/25 | .040 | 40 | 0040 |
| 1/20 | .050 | 50 | 0050 |
| 1/16 | .063 | 63 | 0063 |
| 8/100 | .080 | 80 | 0080 |
| 1/10 | .100 | 100 | 0100 |
| 1/8 | .125 | 125 | 0125 |
| 15/100 | .150 | 150 | 0150 |
| | .160 | 160 | 0160 |
| 2/10 | .200 | 200 | 0200 |
| 1/4 | .250 | 250 | 0250 |
| 3/10 | .300 | 300 | 0300 |
| | .315 | 315 | 0315 |
| 3/8 | .375 | 375 | 0375 |
| 4/10 | .400 | 400 | 0400 |
| 1/2 | .500 | 500 | 0500 |
| 6/10 | .600 | 600 | 0600 |
| | .630 | 630 | 0630 |
| 7/10 | .700 | 700 | 0700 |
| 3/4 | .750 | 750 | 0750 |
| 8/10 | .800 | 800 | 0800 |
| | | | |
| | | | |

| Fraction | Decimal | Amps | Bel FGNO[XXXX] |
|---|---|---|---|
| | 1.0 | 1 | 1000 |
| 1-1/4 | 1.25 | 1.25 | 1250 |
| 1-1/2 | 1.50 | 1.5 | 1500 |
| | 1.60 | 1.6 | 1600 |
| | 2.0 | 2 | 2000 |
| 2-1/4 | 2.25 | 2.25 | 2250 |
| 2-1/2 | 2.5 | 2.5 | 2500 |
| | 3.0 | 3 | 3000 |
| | 3.15 | 3.15 | 3150 |
| 3-1/2 | 3.5 | 3.5 | 3500 |
| | 4.0 | 4 | 4000 |
| | 5.0 | 5 | 5000 |
| | 6.0 | 6 | 6000 |
| | 6.3 | 6.3 | 6300 |
| | 7.0 | 7 | 7000 |
| 7-1/2 | 7.5 | 7.5 | 7500 |
| | 8.0 | 8 | 8000 |
| | | 10 | 9100 |
| | | 12 | 9120 |
| | | 15 | 9150 |
| | | 20 | 9200 |
| | | 25 | 9250 |
| | | 30 | 9300 |

### *Mechanical Dimensions*

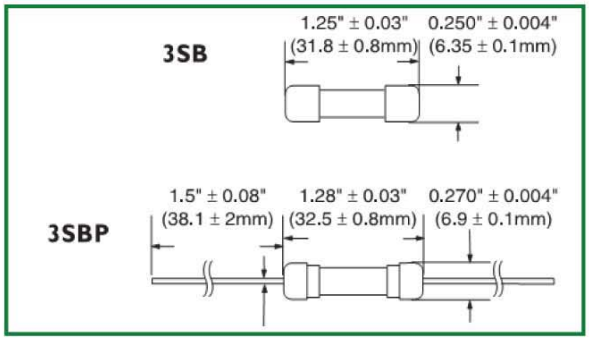


### *Ordering Information*

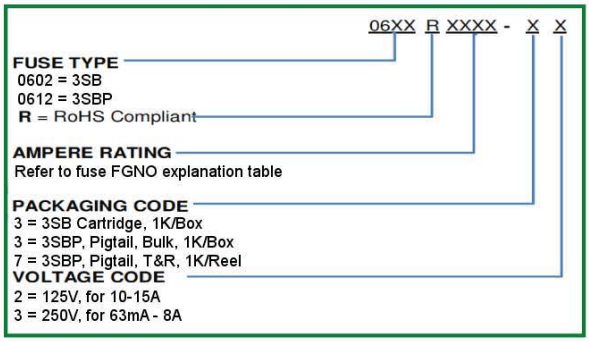


* Ratings 5A and less have 0.032" diameter lead;
Ratings 6A and above have 0.040" diameter lead.

*Specifications subject to change without notice*

### *Packaging*

| Packaging Option | Packaging Specification | Quantity | Packaging Code | Inside Tape Spacing |
|---|---|---|---|---|
| Bulk | N/A | 1000 | 33 / 32 | N/A |
| Bulk (Pigtail Type) | N/A | 1000 | 33 / 32 | N/A |
| Tape & Reel, 10 mm Pitch | EIA-296-F | 1000 | 73 / 72 | 73 |

**CORPORATE OFFICE**
**Bel Fuse Inc.**
206 Van Vorst Street
Jersey City, NJ 07302
Tel 201-432-0463
Fax 201-432-9542
E-Mail: belfuse@belf.com
Website: www. belfuse.com

**FAR EAST OFFICE**
**Bel Fuse Ltd.**
8/F Luk Hop Industrial Building
8 Luk Hop Street
San Po Kong
Kowloon, Hong Kong
Tel 852-2328-5515
Fax 852-2352-3706

**EUROPE OFFICE**
**Bel Fuse Europe Ltd.**
Preston Technology Management Centre
Marsh Lane, Suite F15
Preston, Lancashire, PR1 8UQ
United Kingdom
Tel 44-1772-556601
Fax 44-1772-561008

**EUROPE**
**Bel Stewart GmbH**
Industriestrasse 20
61381 Friedrichsdorf
Germany
Tel 49-6172-9552-0
Fax 49-6172-9552-40