RoHS

3SB Apr2013D

Type 3SB / 3SBP
Slow Blow Fuse Series

6 x 32 mm Glass Tube
RoHS 6 Compliant

3SB / 3SBP Series, 6 x 32mm Slow Blow Fuse

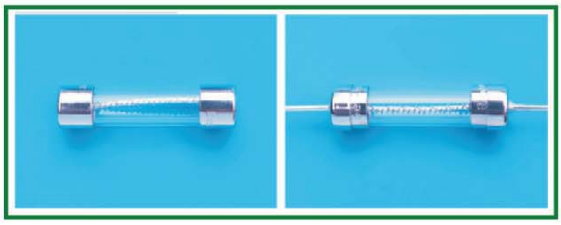

Description

6x32mm Slow Blow,glass tube body cartridge fuse designed, approved and complied with UL and CSA standard 248-14.

Features

- **Meet UL and CSA standard 248-14**
- **Wide operating temperature range**
- **Bulk and Tape & Reel packing available**
- **RoHS6 compliant**
- **Halogen Free**
- **Leadfree**

Applications

Provide individual protection for components or internal circuits.

- **Power Supplies**
- **Battery charger**
- **Monitor**
- **Adapter**

LEAD FREE = Pb

HALOGEN FREE = HF

Electrical Characteristics (UL / CSA STD.248-14)

Testing current	Blow Time	
	Minimum	Maximum
100%	4 Hrs.	N/A
135%	N/A	1 Hr
200%	5 sec	30 sec

Safety Agency Approvals

SAFETY AGENCY	SAFETY AGENCY CERTIFICATE NUMBER	AMPERE RANGE / VOLT @ I.R.ABILITY
c UL us	E20624	63mA -8A / 125V AC @10,000A 63mA - 8A / 250V AC @200A 8.1A - 15A / 125V AC @10,000A
CSA	LR39772	63mA -1A / 250V AC @35A >1A - 3.5A / 250V AC @100A >3.5A - 8A / 250V AC @200A 8.1A - 15A / 125V AC @10,000A
PS E	JET 1037-31003-1010 JET 1037-31003-1011	1A - 5A / 125V AC @500A
	JET 1037-31003-1007	>5A - 15A / 125V AC @300A
CE		63mA -8A / 125V AC @10,000A 63mA - 8A / 250V AC @200A 8.1A - 15A / 125V AC @10,000A

Specifications Subject to change without notice.

Bel Fuse Inc. 206 Van Vorst Street, Jersey City, NJ 07302 • Tel: 201-432-0463 • Fax: 201-432-9542 • E-Mail: belfuse@belf.com
Website: www.belfuse.com

Type 3SB / 3SBP

Slow Blow Fuse Series

6 x 32 mm Glass Tube

RoHS 6 Compliant

HF Pb

bel

3SB Apr2013D

Electrical Specifications

Catalog Number	Ampere Rating	Typical Cold Resistance (ohm)	Volt-drop @100% In (Volt) Max.	Voltage Rating (V)	Interrupting Rating	Melting I2T <10 m Sec (A2 Sec)	Melting I2T @ 10 In (A2 Sec)	Maximum Power Dissipation (W)	Agency Approvals			
									c UL us	CSA	PSE	CE
3SB(P) 63-R	63mA	75.5	7.33	250	63mA -8A / 125V AC @10,000A 63mA - 8A / 250V AC @200A 8.1A - 15A / 125V AC @10,000A	0.09	0.10	0.7	Y	Y		Y
3SB(P) 80-R	80mA	48.4	6.27	250		0.13	0.15	0.7	Y	Y		Y
3SB(P) 100-R	100mA	29.4	4.41	250		0.21	0.24	0.5	Y	Y		Y
3SB(P) 125-R	125mA	17.5	3.45	250		0.32	0.37	0.6	Y	Y		Y
3SB(P) 160-R	160mA	12.3	3.13	250		0.50	0.58	0.6	Y	Y		Y
3SB(P) 200-R	200mA	7.1	2.13	250		0.77	0.91	0.6	Y	Y		Y
3SB(P) 250-R	250mA	5.0	1.97	250		1.2	1.4	0.6	Y	Y		Y
3SB(P) 300-R	300mA	3.2	1.52	250		1.9	2.2	0.7	Y	Y		Y
3SB(P) 375-R	375mA	2.14	1.26	250		2.6	3.2	0.7	Y	Y		Y
3SB(P) 500-R	500mA	1.38	1.07	250		4.4	5.4	0.8	Y	Y		Y
3SB(P) 750-R	750mA	0.642	0.68	250		9	10	0.8	Y	Y		Y
3SB(P) 1-R	1A	0.374	0.59	250		16	21	0.9	Y	Y	Y	Y
3SB(P) 1.25-R	1.25A	0.248	0.43	250		25	32	0.9	Y	Y	Y	Y
3SB(P) 1.6-R	1.6A	0.155	0.38	250		39	50	1.0	Y	Y	Y	Y
3SB(P) 2-R	2A	0.115	0.36	250		61	79	1.0	Y	Y	Y	Y
3SB(P) 2.5-R	2.5A	0.079	0.29	250		94	123	1.1	Y	Y	Y	Y
3SB(P) 3-R	3A	0.058	0.27	250		146	192	1.1	Y	Y	Y	Y
3SB(P) 4-R	4A	0.039	0.23	250		226	300	1.2	Y	Y	Y	Y
3SB(P) 5-R	5A	0.029	0.22	250		349	469	1.3	Y	Y	Y	Y
3SB(P) 6-R	6A	0.018	0.19	250		286	455	1.6	Y	Y	Y	Y
3SB(P) 7-R	7A	0.016	0.18	250		372	592	1.8	Y	Y	Y	Y
3SB(P) 8-R	8A	0.013	0.17	250		483	769	1.9	Y	Y	Y	Y
3SB(P) 10-R	10A	0.010	0.17	125		817	1300	2.3	Y	Y	Y	Y
3SB(P) 12-R	12A	0.008	0.15	125		1277	2031	2.6	Y	Y	Y	Y
3SB(P) 15-R	15A	0.006	0.15	125		2123	3377	3.0	Y	Y	Y	Y

Consult manufacturer for other ratings

Soldering Parameters

Lead-free Wave Soldering Profile	
Wave Soldering Parameter	
Average ramp-up rate	200°C / second
Heating rate during preheat	typical 1 - 2 °C / second Max. 4°C/ second
Final preheat temperature	within 125°C of soldering temperature
Peak temperature Tp	260°C
Time within +0 °C / -5°C of actual peak temperature	10 seconds
Ramp-down rate	5 °C / second max.

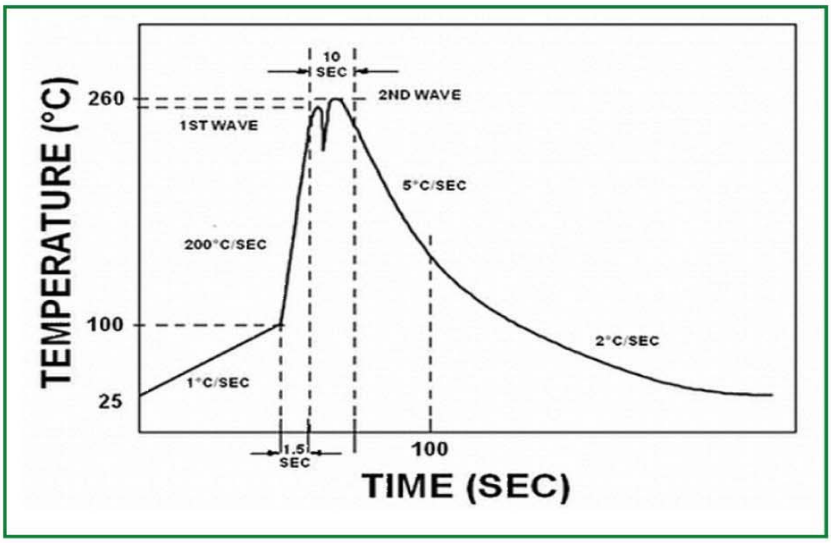

Bel Fuse Inc. 206 Van Vorst Street, Jersey City, NJ 07302 • Tel: 201-432-0463 • Fax: 201-432-9542 • E-Mail: belfuse@belf.com
Website: www.belfuse.com

Type 3SB / 3SBP

Slow Blow Fuse Series

6 x 32 mm Glass Tube
RoHS 6 Compliant
HF Pb

bel

3SB Apr2013C

Temperature Derating Curve

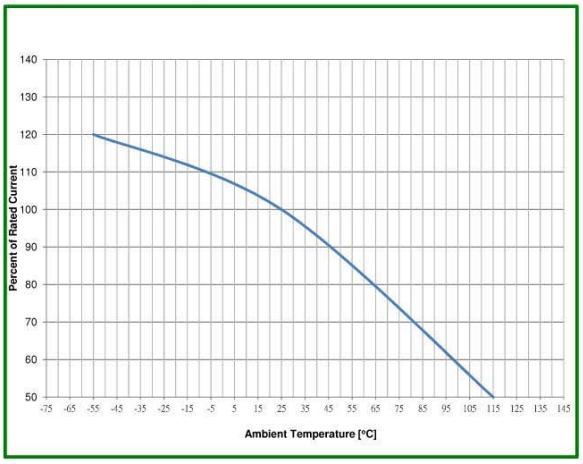

Average Time Current Curve

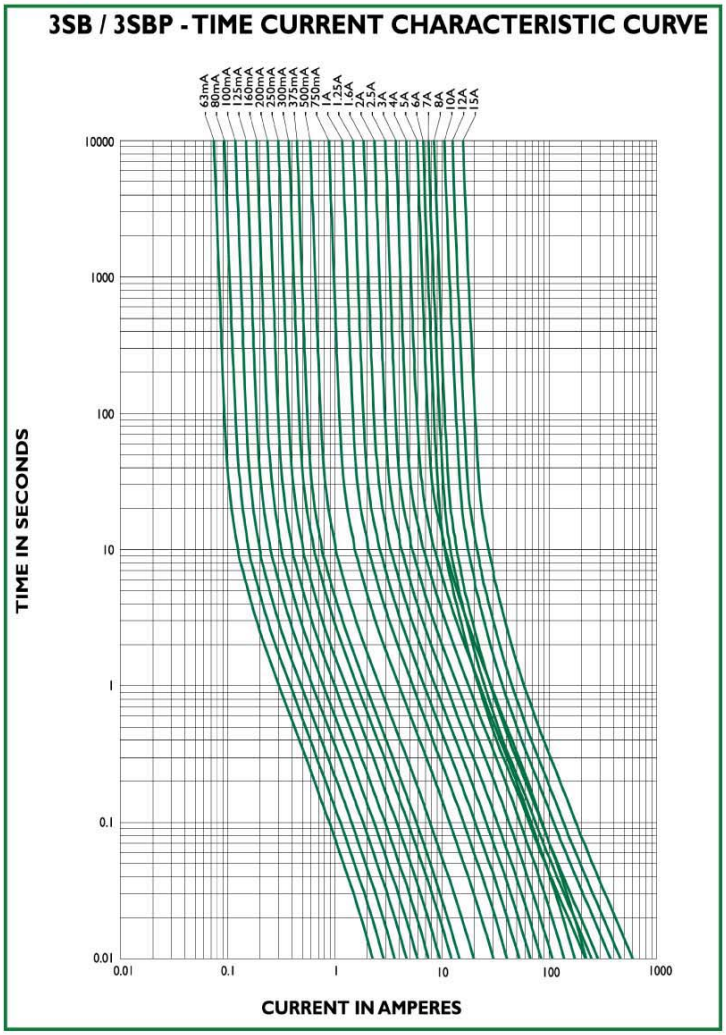

Environmental Specifications

Shock Resistance	MIL-STD-202G, Method 213B, Test Condition I (100 G's peak for 6 milliseconds; Sawtooth Waveform)
Vibration Resistance	MIL-STD-202G, Method 201A (10-55 Hz, 0.06 inch, total excursion).
Salt Spray Resistance	MIL-STD-202G, Method 101E, Test condition B (48 hrs).
Insulation Resistance	MIL-STD-202G, Method 302, Test Condition A (After Opening) 10,000 ohms minimum.
Solderability	MIL-STD-202G, Method 208H
Resistance to solder Heat	MIL-STD-202G Method 210F,Test Condition B.(260+/-5℃,10+/-1 sec)
Thermal Shock	MIL-STD-202G, Method 107G, Test Condition B (-65℃ to +125℃).
Operating Temperature	-55℃ to +125℃
Terminal Strength	IEC-68-2-21

Bel Fuse Inc. 206 Van Vorst Street, Jersey City, NJ 07302 • Tel: 201-432-0463 • Fax: 201-432-9542 • E-Mail: belfuse@belf.com
Website: www.belfuse.com

Type 3SB / 3SBP
Slow Blow Fuse Series

6 x 32 mm Glass Tube
RoHS 6 Compliant

3SB Apr2013D

Physical Specifications

Materials	Body : Glass
	Cap : Nickel Plated Brass Caps
	Leads: Matte Tin Plated Copper
Marking	On Fuse:
	"bel" , "3SB" ," Current Rating","Voltage Rating",
	"Appropriate Safety Logos"," ✔ "(RoHS 6 compliant)
	On label:
	"bel" , "3SB", or "3SBP","Current Rating","Voltage Rating","Interrupting Rating", "Appropriate Safety Logos" and " ","e "(China RoHS compliant).

Fuse FGNO Explanation
06XX-[XXXX]-XX, [XXXX]=Ampere Rating

Fraction	Decimal	Milliamps	Bel FGNO[XXXX]
1/32	0.032	32	0032
1/25	.040	40	0040
1/20	.050	50	0050
1/16	.063	63	0063
8/100	.080	80	0080
1/10	.100	100	0100
1/8	.125	125	0125
15/100	.150	150	0150
	.160	160	0160
2/10	.200	200	0200
1/4	.250	250	0250
3/10	.300	300	0300
	.315	315	0315
3/8	.375	375	0375
4/10	.400	400	0400
1/2	.500	500	0500
6/10	.600	600	0600
	.630	630	0630
7/10	.700	700	0700
3/4	.750	750	0750
8/10	.800	800	0800

Fraction	Decimal	Amps	Bel FGNO[XXXX]
	1.0	1	1000
1-1/4	1.25	1.25	1250
1-1/2	1.50	1.5	1500
	1.60	1.6	1600
	2.0	2	2000
2-1/4	2.25	2.25	2250
2-1/2	2.5	2.5	2500
	3.0	3	3000
	3.15	3.15	3150
3-1/2	3.5	3.5	3500
	4.0	4	4000
	5.0	5	5000
	6.0	6	6000
	6.3	6.3	6300
	7.0	7	7000
7-1/2	7.5	7.5	7500
	8.0	8	8000
		10	9100
		12	9120
		15	9150
		20	9200
		25	9250
		30	9300

Mechanical Dimensions

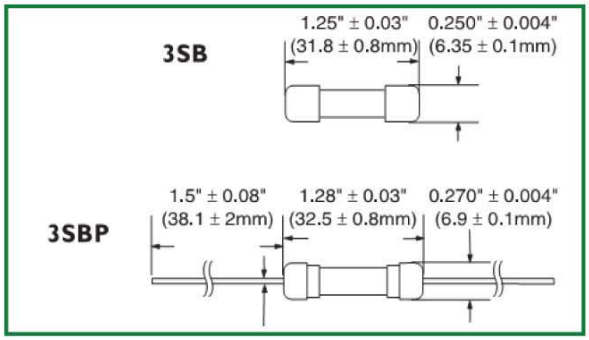

Ordering Information

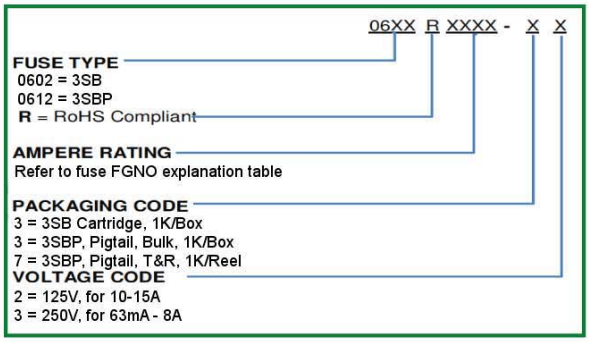

* Ratings 5A and less have 0.032" diameter lead;
Ratings 6A and above have 0.040" diameter lead.

Specifications subject to change without notice

Packaging

Packaging Option	Packaging Specification	Quantity	Packaging Code	Inside Tape Spacing
Bulk	N/A	1000	33 / 32	N/A
Bulk (Pigtail Type)	N/A	1000	33 / 32	N/A
Tape & Reel, 10 mm Pitch	EIA-296-F	1000	73 / 72	73

CORPORATE OFFICE
Bel Fuse Inc.
206 Van Vorst Street
Jersey City, NJ 07302
Tel 201-432-0463
Fax 201-432-9542
E-Mail: belfuse@belf.com
Website: www. belfuse.com

FAR EAST OFFICE
Bel Fuse Ltd.
8/F Luk Hop Industrial Building
8 Luk Hop Street
San Po Kong
Kowloon, Hong Kong
Tel 852-2328-5515
Fax 852-2352-3706

EUROPE OFFICE
Bel Fuse Europe Ltd.
Preston Technology Management Centre
Marsh Lane, Suite F15
Preston, Lancashire, PR1 8UQ
United Kingdom
Tel 44-1772-556601
Fax 44-1772-561008

EUROPE
Bel Stewart GmbH
Industriestrasse 20
61381 Friedrichsdorf
Germany
Tel 49-6172-9552-0
Fax 49-6172-9552-40