Altech UL1077/508 Busbar System

UL508 listed
E205412

UL508 Listed Busbars

The Altech Busbar System is an innovative way to jumper up to 57 poles of Manual Motor Controllers (MMC) and Supplementary Protectors (SP).

The advantages of this busbar system are:

- 30% Installation time savings
- Panel space savings
- Reduced maintenance
- High electrical ratings

Without Altech Busbar System

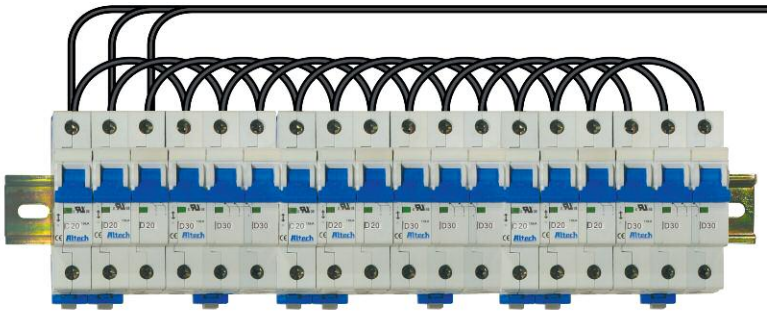

With Altech Busbar System

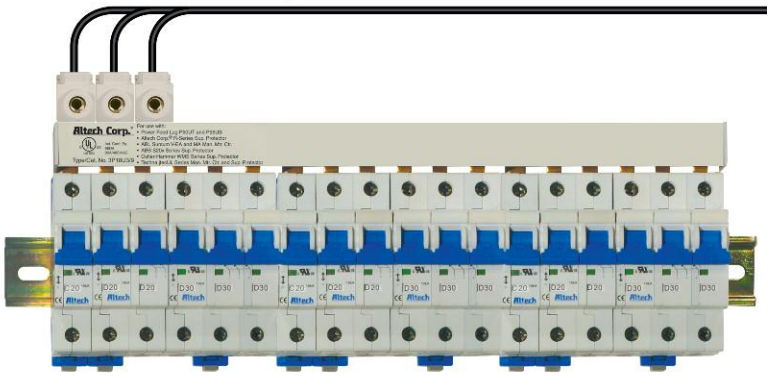

Universal UL1077/508 Busbar fits most Supplementary Protectors and Manual Motor Controllers in the market!

Please contact Altech for details and further information.

UL1077/508 Busbar System

- 1-57 different pin configurations
- 1/2 pole spacing (auxiliary switch) available
- Power Feeding:
  Power Feed Lugs (115A), Direct Power Feed (115A), Power Feed Block (200A)
- UL recognized and listed for Altech's R-Series, V-EA Series and MA Series of Manual Motor Controllers and Supplementary Protectors
- UL recognized and listed for use with most popular UL1077 supplementary protectors and UL508 Manual Motor Controllers in the market.
- Customers can cut the Busbar without losing the UL approval
- Line/Load reversible

Technical Specifications	Busbars UL1077/ 508
Material of Busbar	Copper
Material of Insulation (Housing)	Polyamid
Electrical Ratings	18mm²: 80A/480VAC 25mm²: 100A/480VAC
Short Circuit Withstand Rating	10kA
Applying Standards	UL508, VDE0660 Part 100 and 502, VDE 0606, VDE 0659

Altech UL1077/508 Busbar System

Power Feed Methods

1) Start/ End Feed Method

P50UT* / P50UB*

With the **P50UT** Power Feed Lug or the **P50UB** Modular Direct Power Feed as a Start/End Feeding Device a maximum input current of **80A/100A per Phase** can be achieved. 80A with 18mm² Busbar and 100A with 25mm² Busbar.

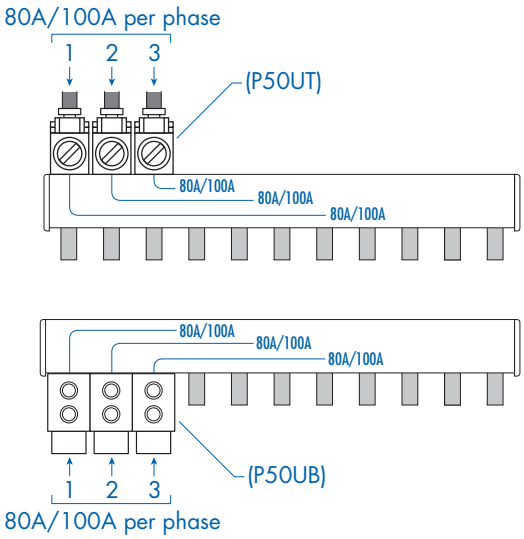

2) Center/ Middle Feed Method

P50UT* / P50UB*

With the **P50UT** Power Feed Lug or the **P50UB** Modular Direct Power Feed as a Center/Middle Feeding Device a maximum input current of **115A per Phase** can be achieved. (18mm²: 80A + 35A; 25mm²: 100A + 15A)

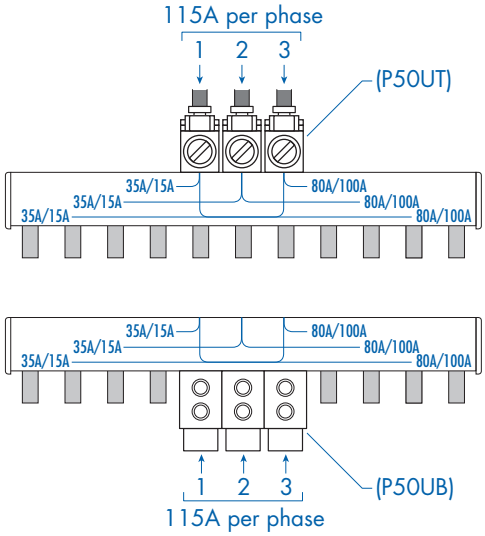

P95UB*

With the **P95UB** Power Feed Block as a Center/Middle Feeding Device a maximum input current of **160A/200A per Phase** can be achieved (160A with 18mm² Busbar and 200A with 25mm² Busbar).

Note: The Power Feed Block can only be used with a standard spacing 3 Phase UL1077/508 Busbar.

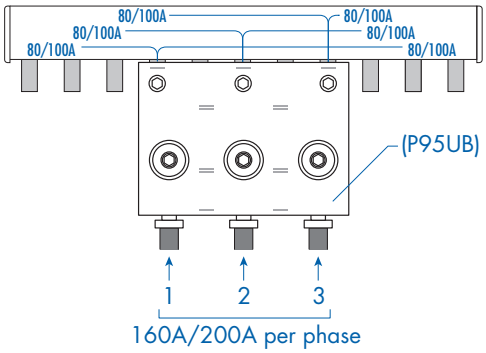

** For complete specifications and description of Feeding Devices see page 12-13.*

1 PHASE BUSBAR - standard spacing

18mm² for 80A

UL508 listed
E205412



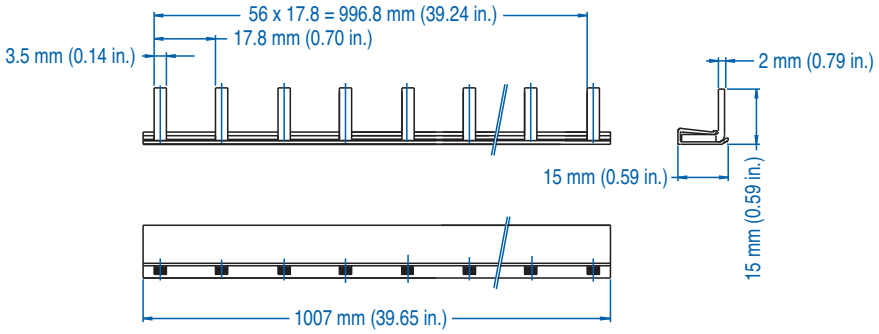

18mm² for 80A

Type/ Cat. No.	No. of Pins	No. of MMC to Jumper	Length [mm]
1P18U1/2	2	2x1 pole	32.5
1P18U1/3	3	3x1 pole	50.3
1P18U1/4	4	4x1 pole	68.0
1P18U1/5	5	5x1 pole	85.8
1P18U1/6	6	6x1 pole	103.5
1P18U1/7	7	7x1 pole	121.3
1P18U1/8	8	8x1 pole	139.0
1P18U1/9	9	9x1 pole	156.8
1P18U1/10	10	10x1 pole	174.5
1P18U1/11	11	11x1 pole	192.3
1P18U1/12	12	12x1 pole	210.0
1P18U1/13	13	13x1 pole	227.8
1P18U1/14	14	14x1 pole	245.5
1P18U1/15	15	15x1 pole	263.3
1P18U1/16	16	16x1 pole	281.0
1P18U1/17	17	17x1 pole	298.8
1P18U1/18	18	18x1 pole	316.5
1P18U1/19	19	19x1 pole	334.3
1P18U1/20	20	20x1 pole	352.0
1P18U1/21	21	21x1 pole	369.8
1P18U1/22	22	22x1 pole	387.5
1P18U1/23	23	23x1 pole	405.3
1P18U1/24	24	24x1 pole	423.0
1P18U1/25	25	25x1 pole	440.8
1P18U1/26	26	26x1 pole	458.5
1P18U1/27	27	27x1 pole	476.3
1P18U1/28	28	28x1 pole	494.0
1P18U1/29	29	29x1 pole	511.8

18mm² for 80A

Type/ Cat. No.	No. of Pins	No. of MMC to Jumper	Length [mm]
1P18U1/30	30	30x1 pole	529.5
1P18U1/31	31	31x1 pole	547.3
1P18U1/32	32	32x1 pole	565.0
1P18U1/33	33	33x1 pole	582.8
1P18U1/34	34	34x1 pole	600.5
1P18U1/35	35	35x1 pole	618.3
1P18U1/36	36	36x1 pole	636.0
1P18U1/37	37	37x1 pole	653.8
1P18U1/38	38	38x1 pole	671.5
1P18U1/39	39	39x1 pole	689.3
1P18U1/40	40	40x1 pole	707.0
1P18U1/41	41	41x1 pole	724.8
1P18U1/42	42	42x1 pole	742.5
1P18U1/43	43	43x1 pole	760.3
1P18U1/44	44	44x1 pole	778.0
1P18U1/45	45	45x1 pole	795.8
1P18U1/46	46	46x1 pole	813.5
1P18U1/47	47	47x1 pole	831.3
1P18U1/48	48	48x1 pole	849.0
1P18U1/49	49	49x1 pole	866.8
1P18U1/50	50	50x1 pole	884.5
1P18U1/51	51	51x1 pole	902.3
1P18U1/52	52	52x1 pole	920.0
1P18U1/53	53	53x1 pole	937.8
1P18U1/54	54	54x1 pole	955.5
1P18U1/55	55	55x1 pole	973.3
1P18U1/56	56	56x1 pole	991.0
1P18U1/57	57	57x1 pole	1008.8

ACCESSORIES







Type/Cat. No:	P50UT	P50UB	BRS5
Description:	Power Feed Lug	Modular Direct Power Feed	Insulation Cap

1 PHASE BUSBAR - 1/2 pole spacing

18mm² for 80A



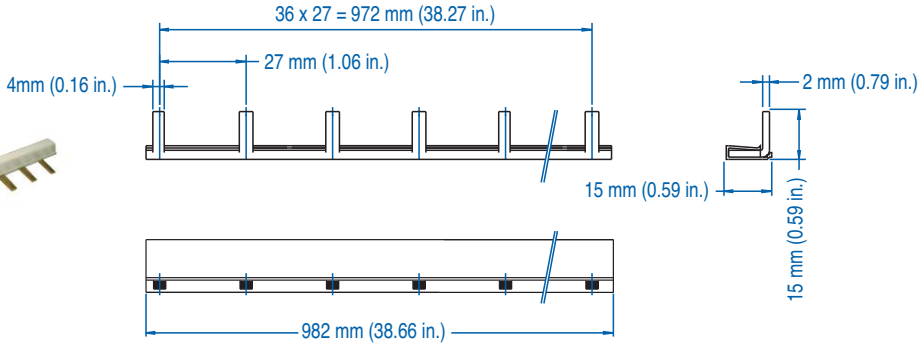

UL508 listed
E205412

18mm² for 80A			
Type/ Cat. No.	**No. of Pins**	**No. of MMC to Jumper**	**Length [mm]**
1P18U1H/2	2	2x1 pole	39.0
1P18U1H/3	3	3x1 pole	66.0
1P18U1H/4	4	4x1 pole	93.0
1P18U1H/5	5	5x1 pole	120.0
1P18U1H/6	6	6x1 pole	147.0
1P18U1H/7	7	7x1 pole	174.0
1P18U1H/8	8	8x1 pole	201.0
1P18U1H/9	9	9x1 pole	228.0
1P18U1H/10	10	10x1 pole	255.0
1P18U1H/11	11	11x1 pole	282.0
1P18U1H/12	12	12x1 pole	309.0
1P18U1H/13	13	13x1 pole	336.0
1P18U1H/14	14	14x1 pole	363.0
1P18U1H/15	15	15x1 pole	390.0
1P18U1H/16	16	16x1 pole	417.0
1P18U1H/17	17	17x1 pole	444.0
1P18U1H/18	18	18x1 pole	471.0
1P18U1H/19	19	19x1 pole	498.0

18mm² for 80A			
Type/ Cat. No.	**No. of Pins**	**No. of MMC to Jumper**	**Length [mm]**
1P18U1H/20	20	20x1 pole	525.0
1P18U1H/21	21	21x1 pole	552.0
1P18U1H/22	22	22x1 pole	579.0
1P18U1H/23	23	23x1 pole	606.0
1P18U1H/24	24	24x1 pole	633.0
1P18U1H/25	25	25x1 pole	660.0
1P18U1H/26	26	26x1 pole	687.0
1P18U1H/27	27	27x1 pole	714.0
1P18U1H/28	28	28x1 pole	741.0
1P18U1H/29	29	29x1 pole	768.0
1P18U1H/30	30	30x1 pole	795.0
1P18U1H/31	31	31x1 pole	822.0
1P18U1H/32	32	32x1 pole	849.0
1P18U1H/33	33	33x1 pole	876.0
1P18U1H/34	34	34x1 pole	903.0
1P18U1H/35	35	35x1 pole	930.0
1P18U1H/36	36	36x1 pole	957.0

ACCESSORIES







Type/Cat. No:	**P50UT**	**P50UB**	**BRS5**
Description:	Power Feed Lug	Modular Direct Power Feed	Insulation Cap

2 PHASE BUSBAR - standard spacing

18mm² for 80A / 25mm² for 100A



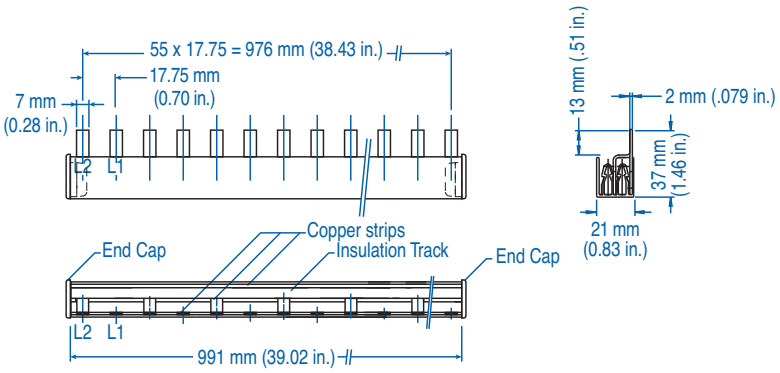

18mm² for 80A

Type/ Cat. No.	No. of Pins	No. of MMC to Jumper	Length [mm]
2P18U3/4	4	2x2 pole	66.3
2P18U3/6	6	3x2 pole	101.8
2P18U3/8	8	4x2 pole	137.3
2P18U3/10	10	5x2 pole	172.8
2P18U3/12	12	6x2 pole	208.3
2P18U3/14	14	7x2 pole	243.8
2P18U3/16	16	8x2 pole	279.3
2P18U3/18	18	9x2 pole	314.8
2P18U3/20	20	10x2 pole	350.3
2P18U3/22	22	11x2 pole	385.8
2P18U3/24	24	12x2 pole	421.3
2P18U3/26	26	13x2 pole	456.8
2P18U3/28	28	14x2 pole	492.3
2P18U3/30	30	15x2 pole	527.8
2P18U3/32	32	16x2 pole	563.3
2P18U3/34	34	17x2 pole	598.8
2P18U3/36	36	18x2 pole	634.3
2P18U3/38	38	19x2 pole	669.8
2P18U3/40	40	20x2 pole	705.3
2P18U3/42	42	21x2 pole	740.8
2P18U3/44	44	22x2 pole	776.3
2P18U3/46	46	23x2 pole	811.8
2P18U3/48	48	24x2 pole	847.3
2P18U3/50	50	25x2 pole	882.8
2P18U3/52	52	26x2 pole	918.3
2P18U3/54	54	27x2 pole	953.8
2P18U3/56	56	28x2 pole	989.3

25mm² for 100A

Type/ Cat. No.	No. of Pins	No. of MMC to Jumper	Length [mm]
2P25U3/4	4	2x2 pole	66.3
2P25U3/6	6	3x2 pole	101.8
2P25U3/8	8	4x2 pole	137.3
2P25U3/10	10	5x2 pole	172.8
2P25U3/12	12	6x2 pole	208.3
2P25U3/14	14	7x2 pole	243.8
2P25U3/16	16	8x2 pole	279.3
2P25U3/18	18	9x2 pole	314.8
2P25U3/20	20	10x2 pole	350.3
2P25U3/22	22	11x2 pole	385.8
2P25U3/24	24	12x2 pole	421.3
2P25U3/26	26	13x2 pole	456.8
2P25U3/28	28	14x2 pole	492.3
2P25U3/30	30	15x2 pole	527.8
2P25U3/32	32	16x2 pole	563.3
2P25U3/34	34	17x2 pole	598.8
2P25U3/36	36	18x2 pole	634.3
2P25U3/38	38	19x2 pole	669.8
2P25U3/40	40	20x2 pole	705.3
2P25U3/42	42	21x2 pole	740.8
2P25U3/44	44	22x2 pole	776.3
2P25U3/46	46	23x2 pole	811.8
2P25U3/48	48	24x2 pole	847.3
2P25U3/50	50	25x2 pole	882.8
2P25U3/52	52	26x2 pole	918.3
2P25U3/54	54	27x2 pole	953.8
2P25U3/56	56	28x2 pole	989.3

ACCESSORIES



Type/Cat. No:	P50UT	P50UB	BRS5	18/25CAP3P
Description:	Power Feed Lug	Modular Direct Power Feed	Insulation Cap	End Cap

2 PHASE BUSBAR - 1/2 pole spacing

18mm² for 80A / 25mm² for 100A



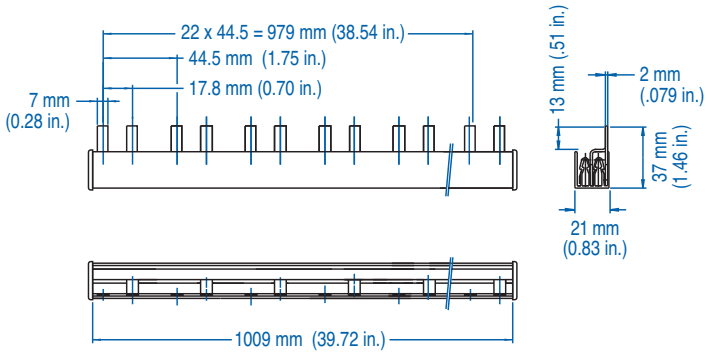

18mm² for 80A

Type/ Cat. No.	No. of Pins	No. of MMC to Jumper	Length [mm]
2P18U3H/4	4	2x2 pole	75.3
2P18U3H/6	6	3x2 pole	119.8
2P18U3H/8	8	4x2 pole	164.3
2P18U3H/10	10	5x2 poles	208.8
2P18U3H/12	12	6x2 pole	253.3
2P18U3H/14	14	7x2 pole	297.8
2P18U3H/16	16	8x2 pole	342.3
2P18U3H/18	18	9x2 pole	386.8
2P18U3H/20	20	10x2 pole	431.3
2P18U3H/22	22	11x2 pole	475.8
2P18U3H/24	24	12x2 pole	520.3
2P18U3H/26	26	13x2 pole	564.8
2P18U3H/28	28	14x2 pole	609.3
2P18U3H/30	30	15x2 pole	653.8
2P18U3H/32	32	16x2 pole	698.3
2P18U3H/34	34	17x2 pole	742.8
2P18U3H/36	36	18x2 pole	787.3
2P18U3H/38	38	19x2 pole	831.8
2P18U3H/40	40	20x2 pole	876.3
2P18U3H/42	42	21x2 pole	920.8
2P18U3H/44	44	22x2 pole	965.3
2P18U3H/46	46	23x2 pole	1009.8
2P18U3H/48	48	24x2 pole	1054.3
2P18U3H/50	50	25x2 pole	1098.8
2P18U3H/52	52	26x2 pole	1143.3
2P18U3H/54	54	27x2 pole	1187.8
2P18U3H/56	56	28x1 pole	1232.3

25mm² for 100A

Type/ Cat. No.	No. of Pins	No. of MMC to Jumper	Length [mm]
2P25U3H/4	4	2x2 pole	75.3
2P25U3H/6	6	3x2 pole	119.8
2P25U3H/8	8	4x2 pole	164.3
2P25U3H/10	10	5x2 pole	208.8
2P25U3H/12	12	6x2 pole	253.3
2P25U3H/14	14	7x2 pole	297.8
2P25U3H/16	16	8x2 pole	342.3
2P25U3H/18	18	9x2 pole	386.8
2P25U3H/20	20	10x2 pole	431.3
2P25U3H/22	22	11x2 pole	475.8
2P25U3H/24	24	12x2 pole	520.3
2P25U3H/26	26	13x2 pole	564.8
2P25U3H/28	28	14x2 pole	609.3
2P25U3H/30	30	15x2 pole	653.8
2P25U3H/32	32	16x2 pole	698.3
2P25U3H/34	34	17x2 pole	742.8
2P25U3H/36	36	18x2 pole	787.3
2P25U3H/38	38	19x2 pole	831.8
2P25U3H/40	40	20x2 pole	876.3
2P25U3H/42	42	21x2 pole	920.8
2P25U3H/44	44	22x2 pole	965.3
2P25U3H/46	46	23x2 pole	1009.8
2P25U3H/48	48	24x2 pole	1054.3
2P25U3H/50	50	25x2 pole	1098.8
2P25U3H/52	52	26x2 pole	1143.3
2P25U3H/54	54	27x2 pole	1187.8
2P25U3H/56	56	28x2 pole	1232.3

ACCESSORIES



Type/Cat. No:	P50UT	P50UB	BRS5	18/25CAP3P
Description:	Power Feed Lug	Modular Direct Power Feed	Insulation Cap	End Cap

Altech UL1077

Altech UL508

3 PHASE BUSBAR - standard spacing

18mm² for 80A / 25mm² for 100A

UL508 listed
E205412



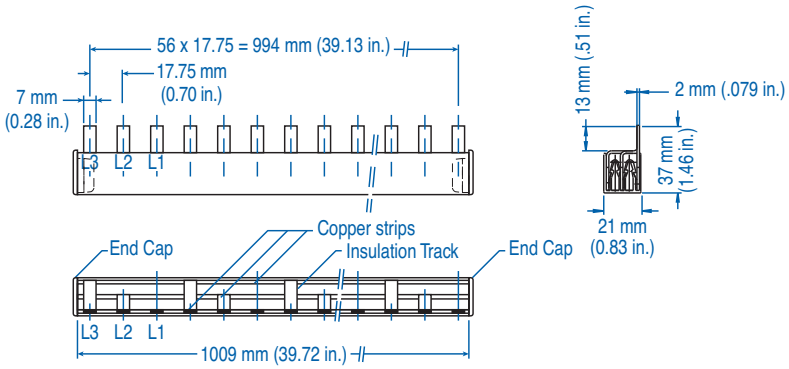

18mm² for 80A

Type/ Cat. No.	No. of Pins	No. of MMC to Jumper	Length [mm]
3P18U3/6	6	2x3 pole	101.8
3P18U3/9	9	3x3 pole	155.0
3P18U3/12	12	4x3 pole	208.3
3P18U3/15	15	5x3 pole	261.5
3P18U3/18	18	6x3 pole	314.8
3P18U3/21	21	7x3 pole	368.0
3P18U3/24	24	8x3 pole	421.3
3P18U3/27	27	9x3 pole	474.5
3P18U3/30	30	10x3 pole	527.8
3P18U3/33	33	11x3 pole	581.0
3P18U3/36	36	12x3 pole	634.3
3P18U3/39	39	13x3 pole	687.5
3P18U3/42	42	14x3 pole	740.8
3P18U3/45	45	15x3 pole	794.0
3P18U3/48	48	16x3 pole	847.3
3P18U3/51	51	17x3 pole	900.5
3P18U3/54	54	18x3 pole	953.8
3P18U3/57	57	19x3 pole	1007.0

25mm² for 100A

Type/ Cat. No.	No. of Pins	No. of MMC to Jumper	Length [mm]
3P25U3/6	6	2x3 pole	101.8
3P25U3/9	9	3x3 pole	155.0
3P25U3/12	12	4x3 pole	208.3
3P25U3/15	15	5x3 pole	261.5
3P25U3/18	18	6x3 pole	314.8
3P25U3/21	21	7x3 pole	368.0
3P25U3/24	24	8x3 pole	421.3
3P25U3/27	27	9x3 pole	474.5
3P25U3/30	30	10x3 pole	527.8
3P25U3/33	33	11x3 pole	581.0
3P25U3/36	36	12x3 pole	634.3
3P25U3/39	39	13x3 pole	687.5
3P25U3/42	42	14x3 pole	740.8
3P25U3/45	45	15x3 pole	794.0
3P25U3/48	48	16x3 pole	847.3
3P25U3/51	51	17x3 pole	900.5
3P25U3/54	54	18x3 pole	953.8
3P25U3/57	57	19x3 pole	1007.0

ACCESSORIES







Type/Cat. No:	P50UT	P50UB	P95UB
Description:	Power Feed Lug	Modular Direct Power Feed	Power Feed Block





Type/Cat. No:	BRS5	18/25CAP3P
Description:	Insulation Cap	End Cap

3 PHASE BUSBAR - 1/2 pole spacing

18mm² for 80A / 25mm² for 100A

Altech Corp.®



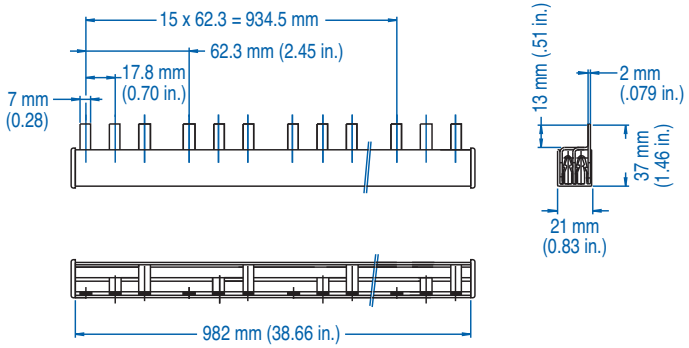

18mm² for 80A

Type/ Cat. No.	No. of Pins	No. of MMC to Jumper	Length [mm]
3P18U3H/6	6	2x3 pole	110.8
3P18U3H/9	9	3x3 pole	173.1
3P18U3H/12	12	4x3 pole	235.4
3P18U3H/15	15	5x3 pole	297.7
3P18U3H/18	18	6x3 pole	360.0
3P18U3H/21	21	7x3 pole	422.3
3P18U3H/24	24	8x3 pole	484.6
3P18U3H/27	27	9x3 pole	546.9
3P18U3H/30	30	10x3 pole	609.2
3P18U3H/33	33	11x3 pole	671.5
3P18U3H/36	36	12x3 pole	733.8
3P18U3H/39	39	13x3 pole	796.1
3P18U3H/42	42	14x3 pole	858.4
3P18U3H/45	45	15x3 pole	920.7
3P18U3H/48	48	16x3 pole	983.0
3P18U3H/51	51	17x3 pole	1045.3
3P18U3H/54	54	18x3 pole	1107.6
3P18U3H/57	57	19x3 pole	1169.9

25mm² for 100A

Type/ Cat. No.	No. of Pins	No. of MMC to Jumper	Length [mm]
3P25U3H/6	6	2x3 pole	110.8
3P25U3H/9	9	3x3 pole	173.1
3P25U3H/12	12	4x3 pole	235.4
3P25U3H/15	15	5x3 pole	297.7
3P25U3H/18	18	6x3 pole	360.0
3P25U3H/21	21	7x3 pole	422.3
3P25U3H/24	24	8x3 pole	484.6
3P25U3H/27	27	9x3 pole	546.9
3P25U3H/30	30	10x3 pole	609.2
3P25U3H/33	33	11x3 pole	671.5
3P25U3H/36	36	12x3 pole	733.8
3P25U3H/39	39	13x3 pole	796.1
3P25U3H/42	42	14x3 pole	858.4
3P25U3H/45	45	15x3 pole	920.7
3P25U3H/48	48	16x3 pole	983.0
3P25U3H/51	51	17x3 pole	1045.3
3P25U3H/54	54	18x3 pole	1107.6
3P25U3H/57	57	19x3 pole	1169.9

ACCESSORIES





Type/Cat. No:	P50UT	P50UB
Description:	Power Feed Lug	Modular Direct Power Feed





Type/Cat. No:	BRS5	18/25CAP3P
Description:	Insulation Cap	End Cap

Power Feed Devices

Easy connection of power supply wires to the busbar/MCB. Power Feed Devices ensure permanent connection.

Power Feed Lug



Modular Direct Power Feed



Type/Cat. No.	P50UT	P50UB
Electrical Ratings	115A/480VAC	115A/480VAC
Terminal Site Acceptability	10-1/0 AWG (1.5-50mm²)	14-1 AWG (1.5-50mm²)
Recommended/ Required Torque	5.6Nm (50lb. in.)	4Nm (35.4 lb. in.)
Material of Lug/ Terminal	Brass	Brass
Insulation Material	Polyamid	Polyamid
For use with	UL1077/508 18 and 25mm² 1-3 phase busbars	UL1077/508 18 and 25mm² 1-3 phase busbars

Dimensions

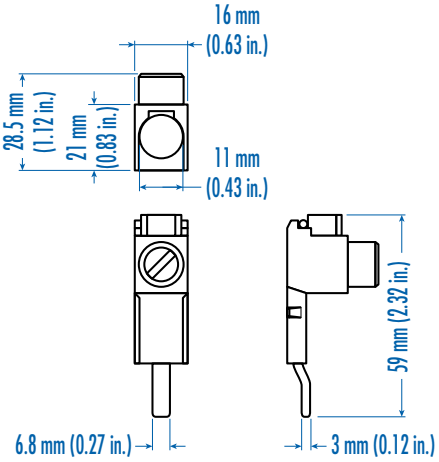

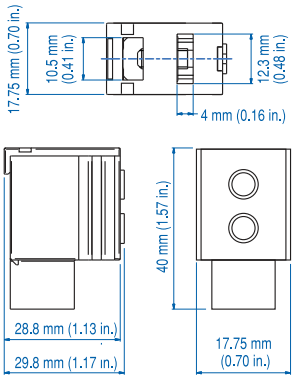

Assembly Instructions

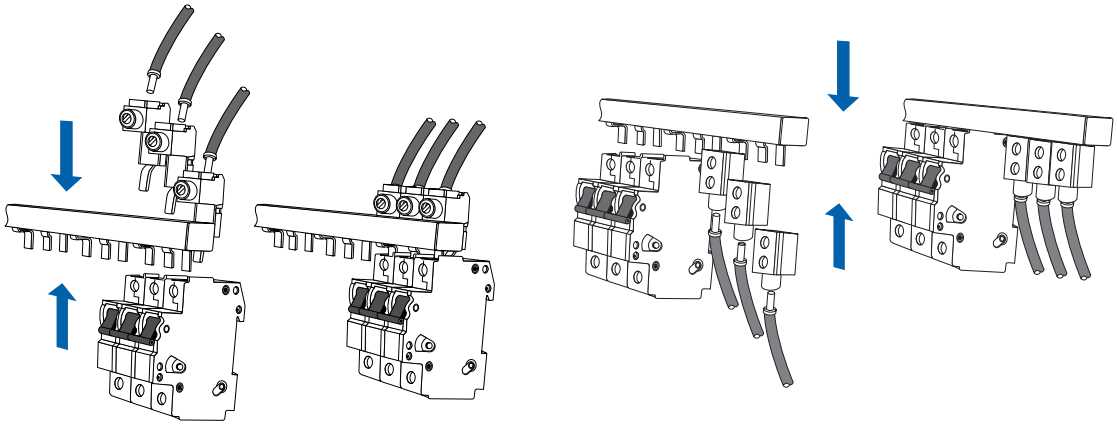

The power feed lugs (Cat. # P50UT) fit together with the lugs of the busbar in the terminals of the MCB/MA.

Power Feed Block



UL508 listed
E205412

Type/Cat. No.	P95UB
Electrical Ratings	200A/ 480VAC
Terminal Site Acceptability	1-4/0 AWG (50-120mm²)
Recommended/ Required Torque	19.5Nm (175lb. in.)
Material of Lug/ Terminal	Brass
Insulation Material	Polyamid
For use with	UL1077/508 18 and 25mm² 3 phase busbars (standard spacing only)

Dimensions

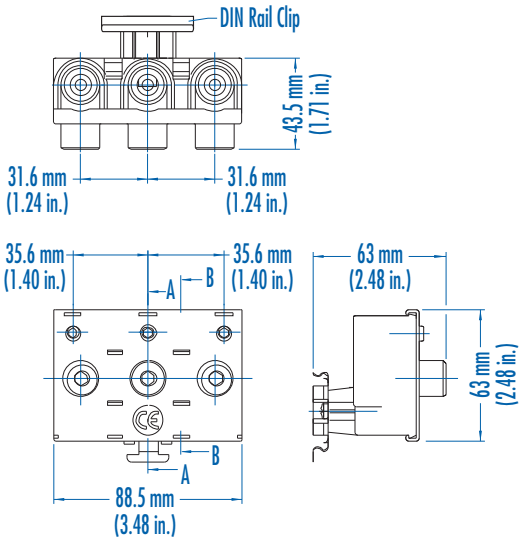

Assembly Instructions

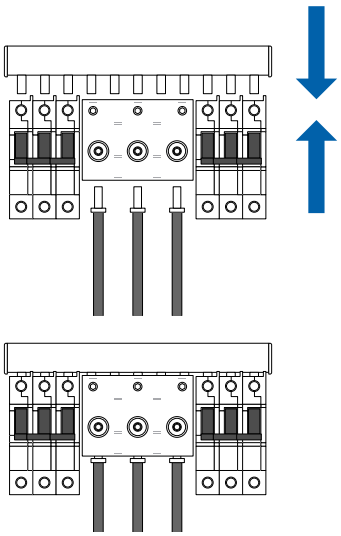

Miscellaneous Accessories

End Caps



Type/Cat. No:	18/25CAP3P
For use with:	18/25mm² 2&3 phase Busbar

Insulation Caps



Type/Cat. No:	BRS5 *(5 per strip)*
For use with:	18/25mm² 1-3 phase Busbar

NOTE: The Power Feed Block uses the space of 5 Pins of the standard spacing Busbar (see drawing below). Phase 1 connects to Pin 1, Phase 2 to Pin 3 and Phase 3 to Pin 5. Pin 2 and 4 are not in use. Pin 6 should be covered with an insulation cap if phase sequence stays the same. Therefore, the Power Feed Block covers 6 pins to connect to the three phases.

