398 Series, TE5® Modul Protector® Fuse

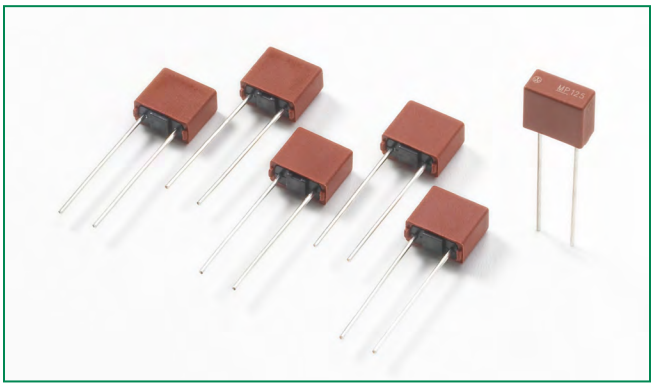

Description

The 398 Series TE5® Fuses are short circuit protectors, medium Time-Lag type, and 65V rated.

Features

- Reduced PCB space requirements
- Highly defined cut-off times
- Low internal resistance
- Flame resistant encapsulated casing
- Available from 0.125A to 4A
- Halogen free, Lead-free and RoHS compliant

Agency Approvals

Agency	Agency File Number	Ampere Range
c UL us	E67006	0.125A - 4A

Applications

- Microprocessor protection

Additional Information

Datasheet | **Resources** | **Samples**

Electrical Characteristics

% of Ampere Rating	Opening Time
300	10 Seconds, **Max.**

Electrical Characteristics

Amp Code	Rated Current	Marking Code*	Voltage Rating	Breaking Capacity	Nominal Cold Resistance (Ohms)	Cold Resistance 0.1×I_N typ. (mΩ)	Power Disspation 1.0×I_N max. (mW)	Melting Integral 10×I_N max. (A^2s)	Agency Approvals c UL us
0125	125mA	MP13	65V	50A@65 VAC/DC	0.9610	900	50	0.036	x
0250	250mA	MP25	65V		0.3540	355	50	0.063	x
0315	315mA	MP32	65V		0.2600	261	60	0.08	x
0400	400mA	MP40	65V		0.1860	186	75	0.18	x
0500	500mA	MP50	65V		0.1540	155	90	0.33	x
0630	630mA	MP63	65V		0.1150	115	120	0.48	x
0800	800mA	MP80	65V		0.0850	85	140	1.02	x
1100	1.00A	MP100	65V		0.0640	65	170	1.10	x
1125	1.25A	MP125	65V		0.0480	48	210	2.34	x
1160	1.60A	MP160	65V		0.0340	34	320	4.66	x
1200	2.00A	MP200	65V		0.0260	26	425	8.40	x
1250	2.50A	MP250	65V		0.0210	21	550	14.81	x
1315	3.15A	MP315	65V		0.0155	16	650	29.27	x
1400	4.00A	MP400	65V		0.0120	12	1000	41.12	x

* Physical Marking on top of the device

Notes:

1) 1.00 means the number one with two decimal places. 1,000 means the number one thousand.

2) Resistance is measured at 10% of rated current, 25ºC.

© 2016 Littelfuse, Inc.
Application testing is strongly recommended. Specifications are subject to change without notice.
Revised: 01/06/16

Temperature Re-rating Curve

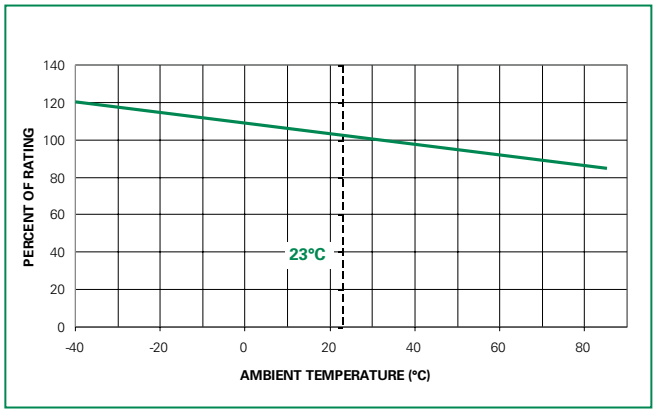

Note:
1. Rerating depicted in this curve is in addition to the standard derating of 25% for continuous operation.

Average Time Current Curves

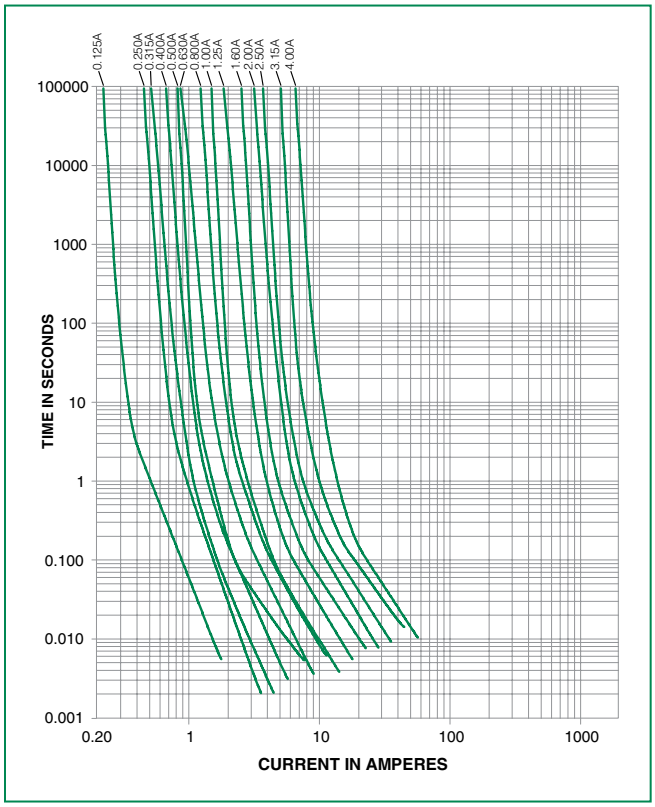

Soldering Parameters - Wave Soldering

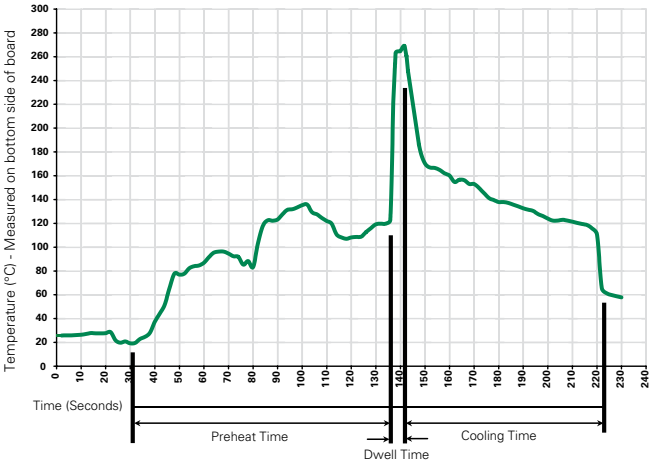

Recommended Process Parameters:

Wave Parameter	Lead-Free Recommendation
Preheat: (Depends on Flux Activation Temperature)	(Typical Industry Recommendation)
Temperature Minimum:	100°C
Temperature Maximum:	150°C
Preheat Time:	60-180 seconds
Solder Pot Temperature:	260°C Maximum
Solder Dwell Time:	2-5 seconds

Recommended Hand-Solder Parameters:

Solder Iron Temperature: 350°C +/- 5°C
Heating Time: 5 seconds max.

Note: These devices are not recommended for IR or Convection Reflow process.

© 2016 Littelfuse, Inc.
Specifications are subject to change without notice.

Revised: 01/06/16

Radial Lead Fuses

TE5® > Medium Time-Lag Fuse > 398 Series

Product Characteristics

Materials	Base/Cap: Brown Thermoplastic Polyamide PA 6.6, UL 94V-0 Round Pins: Copper, Tin-plated
Lead Pull Strength	10N (EN 60068-2-21)
Solderability	260°C, ≤ 3s. (Wave) 350°C, ≤ 1s. (Soldering Iron)
Soldering Heat Resistance	260°C, 10s. (IEC 60068-2-20) 350°C, 3s. (Soldering Iron)

Operating Temperature	-40°C to +85°C (Consider re-rating)
Climatic Category	-40°C to +85°C/21 days (IEC 60068-1,-2-1,-2-2,-78)
Stock Conditions	+10°C to +60°C RH, ≤ 75% yearly average, without dew, maximum value for 30 days-95%
Vibration Resistance	24 cycles at 15 min. each (IEC 60068-6) 10 - 60Hz at 0.75mm amplitude 60 - 2000Hz at 10g acceleration

Dimensions

Dimensions (mm)

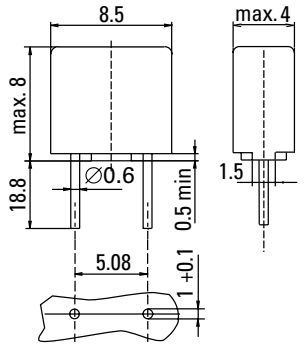

Holes in the printed circuit board

Part Numbering System

398 xxxx 0000

Series

Amp Code

Refer to Amp Code column of Electrical Characteristics Table

Packaging Code

0000 Tape/Ammopack (1,400 pcs.)

Packaging

Packaging Option	Packaging Specification	Quantity	Quantity & Packaging Code	Reel Size
398 Series				
Tape & Ammopack	N/A	1,400	0000	N/A

© 2016 Littelfuse, Inc.
Specifications are subject to change without notice.
Revised: 01/06/16

Mouser Electronics

Authorized Distributor

Click to View Pricing, Inventory, Delivery & Lifecycle Information:

Littelfuse:

39804000000 39805000000 39814000000 39812000000 39811000000 39813150000 39803150000 39806300000 39808000000 39812500000 39802500000 3971150000 3971150044 3981125000 3981100000 3981200000 3980125000 3980500000 3981160000 3980800000 3980315000 3980400000 3980250000 3980630000 39801250000 39811250000 39811600000