REVISIONS			
LTR	DESCRIPTION	DATE	APPROVED

NOTES: UNLESS OTHERWISE SPECIFIED

1. CONSTRUCTION:
   HOUSING: MOLDED NYLON 6 OR 6,6. AVAILABLE IN BLACK, RED, GREEN OR BLUE.
   CONTACT TIP: STEEL. BRIGHT NICKEL FINISH.

2. PERFORMANCE:
   MAXIMUM CURRENT: 5 AMPS
   MAXIMUM VOLTAGE: 1000 V
   MAXIMUM TEMPERATURE: 200°F (93°C)

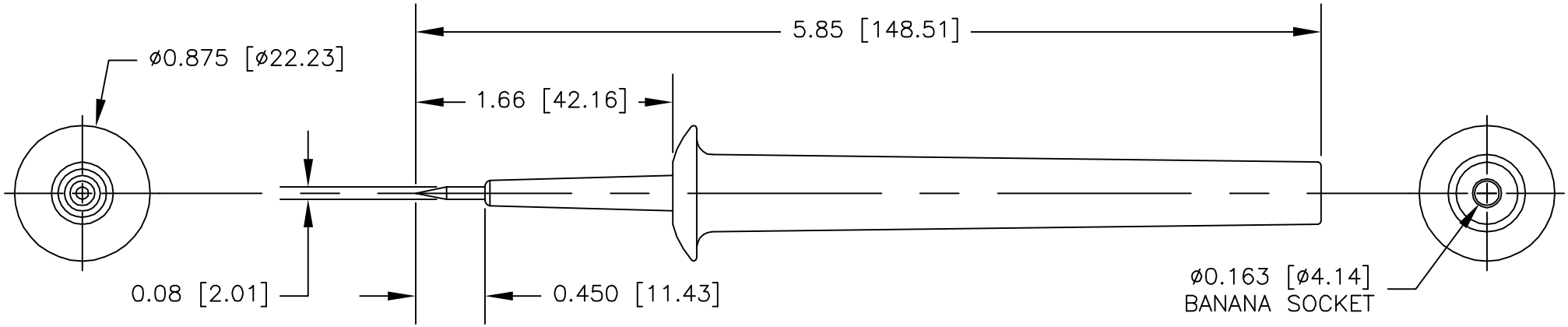

		UNLESS OTHERWISE SPECIFIED DIMENSIONS ARE IN INCHES TOLERANCES ARE: FRACTIONS ± DECIMALS .XX ± .XXX ± ANGLES ±	CONTRACT NO.	E-Z-HOOK® DIVISION OF TEKTEST INC. ARCADIA, CA 91006 U.S.A.	
			APPROVALS / DRAWN R.L.	DATE 3/09	DESCRIPTION: STD. NEEDLE TIP PROBE W/STD. BANANA SOCKET
		MATERIAL: SEE NOTE.	APPROVED BY		
		FINISH: SEE NOTE.			SIZE A | CODE IDENT NO. 08505 | DRAWING NO. 35 | REV.
NEXT ASSY	USED ON				
APPLICATION		DO NOT SCALE DRAWING			SCALE 1:1 | SHEET 1 OF 1

THE INFORMATION CONTAINED IN THIS DOCUMENT IS PROPRIETARY TO E-Z-HOOK. THE INFORMATION IS NOT TO BE REPRODUCED WITHOUT PRIOR WRITTEN PERMISSION OF E-Z-HOOK, DIV. OF TEKTEST INC.
MAXIMUM TESTED RATINGS IN A HANDS-FREE CONTROLLED ENVIRONMENT. MAXIMUM RATINGS ARE NOT TO BE USED CONCURRENTLY.