Keysight Technologies
34980A Multifunction Switch/Measure Unit

Data Sheet



KEYSIGHT TECHNOLOGIES

High-performance switch/measure unit provides a low-cost, highly flexible measurement platform

If you use automated test equipment for design validation or manufacturing, you now have a cost-effective solution for many test system applications. The 34980A multifunction switch/measure unit provides functionality that is easy to set up and use, with a fast startup time. The 34980A helps you lower your cost of test and accelerate your test-system integration and development.

The 34980A handles system switching up to 26.5 GHz and provides basic measurements and system control. It also offers DMM measurements, counter/ totalizer functionality, digital I/O with pattern capabilities, and analog outputs with basic waveforms– all in one low-cost, compact box. And with its standard connectors and software drivers, computer-standard I/O, and Web browser interface, the 34980A easily integrates into electronic functional test and data acquisition systems.

Flexible switching, measurements, and system control

The 34980A accommodates up to 8 plug-in modules to give you the flexibility you need. Choose from 21 different modules to define your own configuration. You can buy what you need now and add to it or reconfigure it as your requirements change.

Whether you are measuring temperature, AC or DC voltage, resistance, frequency, current, or custom measurements, the 34980A offers the functionality you need in a single box. Switch in different measurements with high-performance signal switching up to 300V with no external signal conditioning required. Choose between different switch types and topologies with frequency ranges from DC to 26.5 GHz. The 34980A offers high-density multiplexers for scanning multiple channels, matrices for connecting multiple points at one time, and general purpose switches for simple control and high power needs.

Use the 34980A to route individual signals or monitor multiple signals over a specified period of time—monitor a single channel or multiple channels, set alarms, and identify irregularities.

The 34980A offers flexible choices for system control. You can control external devices such as microwave switches, attenuators, solenoids, and power relays. Or use the digital inputs to sense limit-switch and digital-bus status.

Optimized for test systems

The 34980A has the performance you need for medium- to high-density switching/measurement applications such as design verification, functional test and data acquisition. Your signals are switched to the right measurement device without compromising signal integrity. Switch your signals to the optional internal DMM and achieve optimal throughput on switch closure time. Or, if you prefer, you can easily connect to external instruments such as DMMs, scopes, power supplies, and more. What's more, with the built-in Ethernet interface, you can control the 34980A and collect data from anywhere on the network. For a complete modular solution, use the 34980A together with PXI modular products when more capability is required.

The rugged instrument comes with a variety of system-ready features:
- Web browser interface shows settings at a glance and provides remote access and control
- Self-guiding front panel to configure, troubleshoot or view data
- Low EMI and efficient system cooling
- Heavy-duty cabling and connection options
- Flexible rack mounting options
- Relay counters help predict end-of-life
- In-rack calibration for reduced maintenance time
- DMM measurement accuracies include the switch for simple calculations

Make system connections easily and quickly with simple, reliable connection options:
- Built-in Ethernet, USB 2.0, and GPIB connectivity
- Low-cost, standard 50- or 78-pin Dsub connectors and cables
- Detachable terminal blocks with strain relief
- Mass interconnect solutions

In addition, the 34980A comes with Keysight Technologies, Inc. IO Libraries Suite. Quickly establish an error-free connection between your PC and instruments—regardless of vendor. The IO Libraries provide robust instrument control and work with the software development environment you choose.

Easier signal routing with four 2-wire internal analog buses. You can route your measurements directly to the internal DMM, or you can connect to external instruments through the analog bus connector on the rear of the mainframe. And since you have four 2-wire buses, you can dedicate one bus for use with the internal DMM and use the other three buses for module extensions or additional signal routing between modules, reducing your wiring needs.

You can define up to 500 switch sequences to control complex signal routing and the order of switch closures. Assign a sequence, give it a name and then execute it with the name you created.

Switch sequences are downloaded and stored in the instrument for ease of programming and increased throughput.

External trigger capabilities make it easy for you to time and synchronize measurements and other events. This can help you determine when to begin or end an acquisition.

Measurements you can trust

Get proven performance from Keysight instruments, with the resolution, repeatability, speed, and accuracy you've come to expect.

The 34980A offers built-in signal conditioning and modular flexibility. When you use it with the internal DMM, you can configure each channel independently for the measurements you choose. It includes a variety of features that give you confidence in your measurements:

- 6½ digits of resolution with .004% of accuracy with DC voltage measurements
- Alarms per channel—high limit, low limit, or both
- Math functions—use Mx+B for custom linear conversions and converting raw inputs
- Built-in thermocouple reference for temperature measurements (34921T)
- Time-stamped readings
- Add more formulas with BenchLink Data Logger Software

The integrated DMM is mounted inside the mainframe and does not consume any of the eight user-available slots. You can access the DMM through any switch module that connects to the analog bus, or directly from the analog bus connector on the rear of the mainframe. The internal DMM gives you the flexibility to measure 11 types of inputs:

- Temperature with thermocouples, RTDs, or thermistors (with 34921A)
- DC and AC voltage
- 2- and 4-wire resistance
- Frequency and period
- DC and AC current

You can control the DMM directly, or configure it to work in conjunction with the switches. Each switch channel can be configured independently for measurement functions, scale factors and alarm limits. Advanced measurement features such as offset compensation, variable integration time, and delay are also selectable on a per-channel basis.

The DMM inputs are shielded and optically isolated from the 34980A's earth-referenced circuitry and computer interface, and as a result, you get up to 300 V of input isolation. This is important for reducing ground-loops and common-mode voltage errors associated with long wiring runs and floating sources.

Simple DMM calibration is accomplished with just the analog bus connection on the rear panel of the mainframe. You don't need to remove the mainframe from the rack or dedicate a channel for calibration.

Modules provide flexible system stimulus and control

System control—with analog outputs, open-collector digital outputs, clock generation, and isolated Form-C relays for controlling external devices. Additionally, with the microwave switch/attenuator driver, high-frequency switches and attenuators can be efficiently controlled external to the 34980A mainframe.

Analog sources—output either voltage or current. You can configure the 4-channel isolated D/A converter as a point-to-point arbitrary waveform generator that lets you define up to 500,000 points per waveform.

Digital patterns—send or receive digital data from your device under test. With onboard memory you can output communication protocols and bit streams or monitor digital input patterns and interrupt when a user-defined pattern is detected.

Standard interfaces take the hassle out of connecting to your PC

Standard Ethernet, USB and GPIB interfaces are included in every mainframe. Use one of the built-in interfaces that is already available in your computer, or if you prefer, GPIB is still available.

- USB offers the quickest and easiest connection scheme—it's perfect for small systems and bench connections.
- Ethernet offers high-speed connections that allow for remote access and control. Choose a local area network to filter out unwanted LAN traffic and speed up the I/O throughput. Or take advantage of the remote capabilities and distribute your tests worldwide. Use the graphical Web browser to monitor, troubleshoot, or debug your application remotely.
- GPIB has many years of proven reliability for instrument communication and can be used in existing GPIB based test systems.

Remote access and control

The built-in Web browser interface provides remote access and control of the instrument via a Java-enabled browser such as Internet Explorer. Using the Web interface, you can set up, troubleshoot, and maintain your system remotely.

- View and modify instrument setup
- Open, close, or monitor switches
- Send SCPI commands
- Define and execute switch scans and switch sequences
- View error queue
- Get status reports on relay counts, firmware revisions, and more

Additionally, since the Web interface is built into the instrument, you can access it on any operating system that supports the Web browser without having to install any special software. Password protection and LAN lock out are also provided to limit access.The Web interface makes it easy to set up, troubleshoot and maintain your system remotely.

Works with your choice of software so you can save time and preserve your software and hardware investments. Program directly with SCPI, or use IVI or LabVIEW software drivers that provide compatibility with the most popular development environments and tools:

- Keysight VEE Pro, Keysight T&M Toolkit (requires Microsoft® Visual Studio®. NET)
- National Instruments LabVIEW, LabWindows/CVI, TestStand, and Switch Executive
- Microsoft Visual Studio.NET, C/C++ and Visual Basic 6

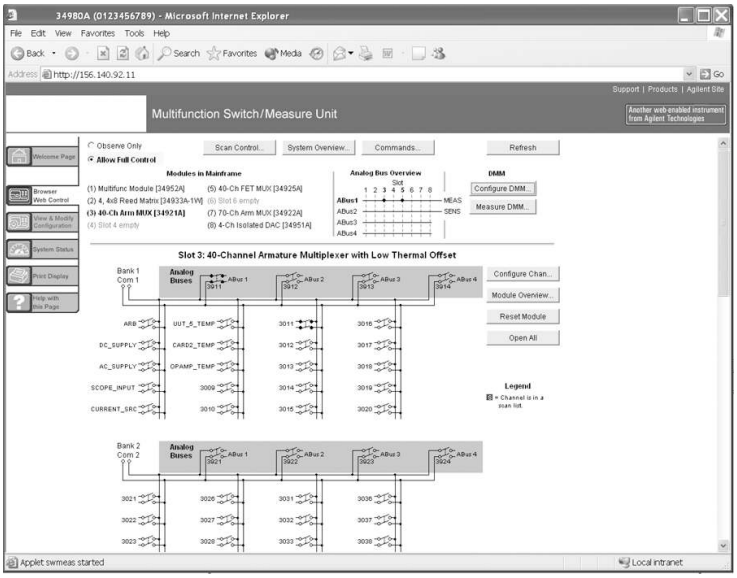

Figure 1.

Free BenchLink Data Logger Software to Simplify data logging

The BenchLink Data Logger software for the 34980A provides a convenient way to collect and analyze your data.

This is a Windows-based application that uses a familiar spreadsheet environment to define measurement data to be collected. The tab-based format makes it easy to set up and initiate scans. Simply identify the measurements you want to acquire, initiate the process and see the data displayed real-time. The rich set of colorful graphics provides many options for analyzing and displaying your data. You can specify multiple channels per graph, or send collected data to multiple graphs. Use strip charts with markers and alarm indication, or histograms with statistics. And of course you can use BenchLink Data Logger to easily move data to other applications for further analysis, or for inclusion in your presentations and reports.

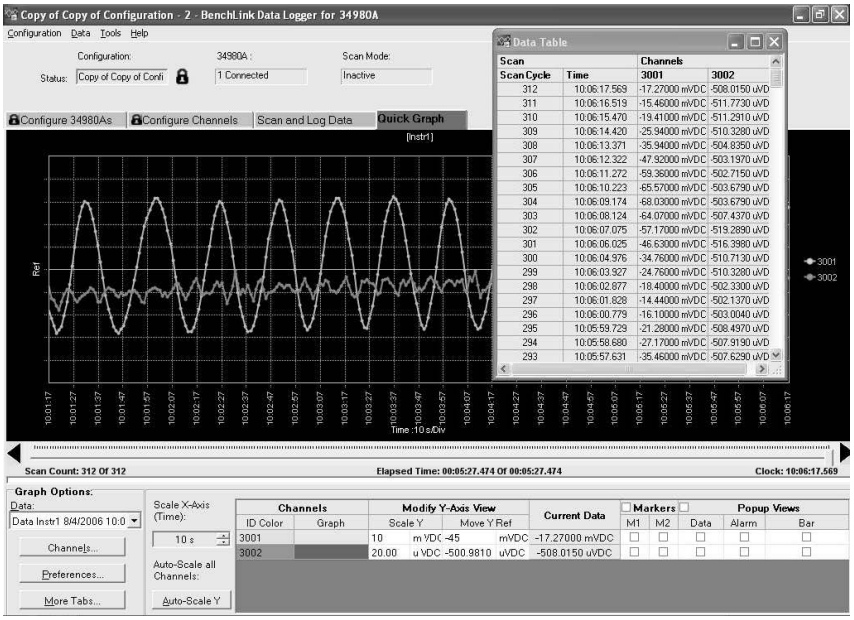

Figure 2. 34826A BenchLink Data Logger Software for high speed data logging with no programming

Also Available

The BenchLink Data Logger Pro Software adds limit checking and decision making for more complex applications. Simply identify the measurements you want to acquire, define limits and actions to be preformed, and then initiate the process. Your data is then collocated, evaluated and acted on real-time.

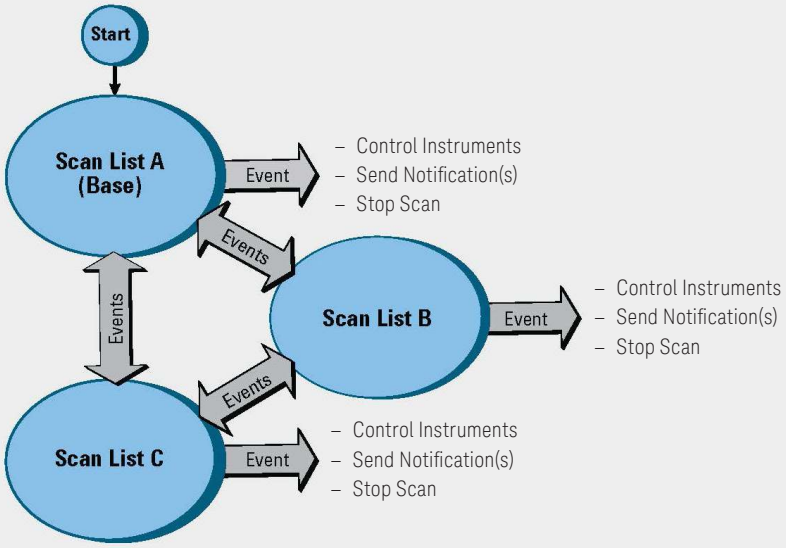

Figure 3. 34832A BenchLink Data Logger Pro adds limit checking and decision making

Power and Flexibility to get Your Job Done

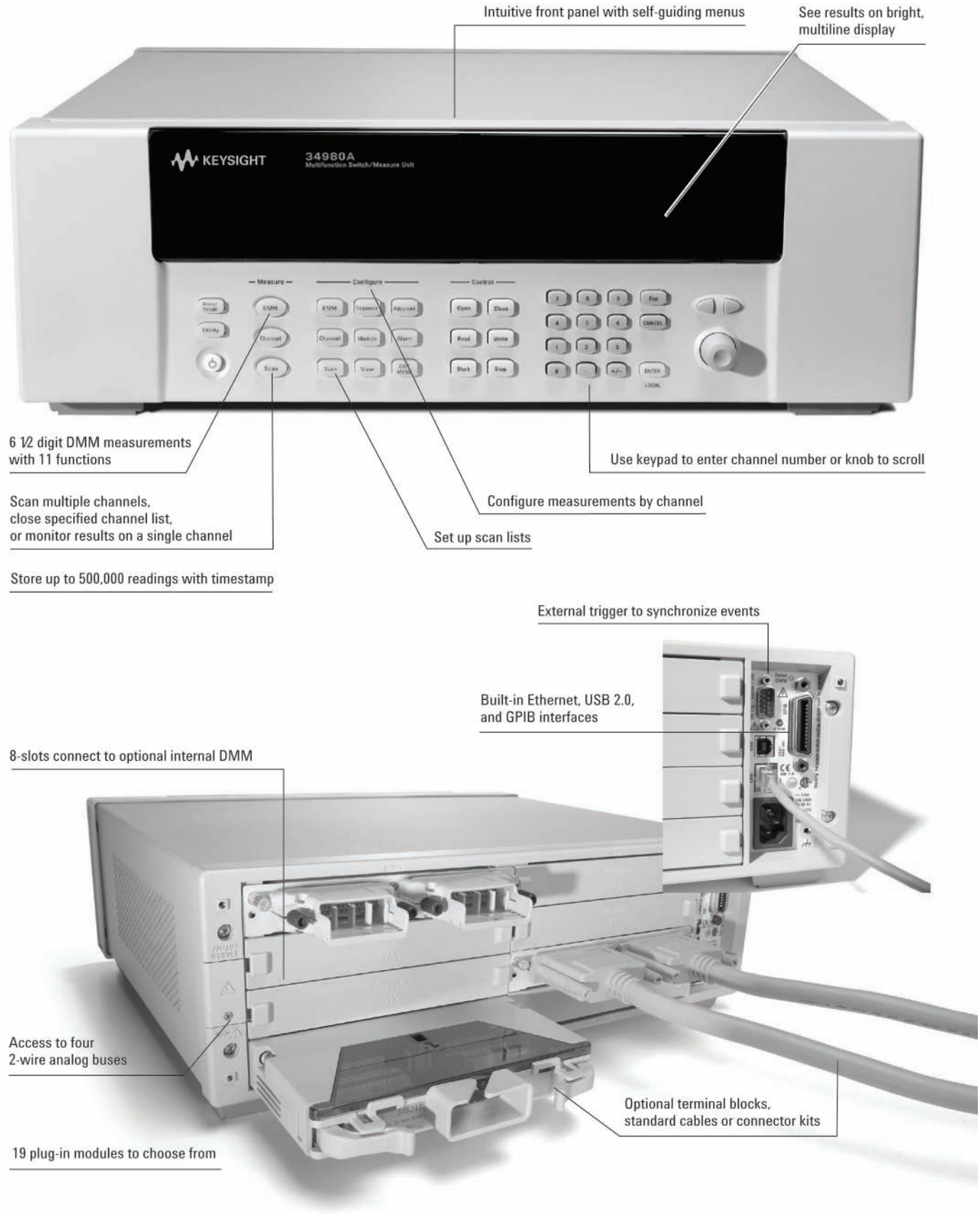

Mix and Match 34980A Modules to Create Your Own Custom Configuration

The 34980A mainframe holds up to eight plug-in modules. Mix and match them to create a custom system to meet your switching and system control needs. You can easily add or replace modules as your needs change.s

Table 1. 34980A modules at a glance

Module	Description	Max volts	Switch/Carry current	BW (MHz)	Scan ch/sec	Thermal offset	Comments
Multiplexer modules							
34921A	40-channel armature multiplexer w/low thermal offset	± 300 V	1A/2A	45 MHz	100	< 3 µV	Temperature reference 4 current channels Config as 2- or 4-wire
34922A	70-channel armature multiplexer	± 300 V	1A/2A	25 MHz	100	< 3 µV	Config as 2- or 4-wire
34923A	40/80-channel reed multiplexer	± 150 V	0.5A/1.5A	45 MHz	500	< 50 µV	Config as 1-, 2- or 4-wire
34924A	70-channel reed multiplexer	± 150 V	0.5A/1.5A	25 MHz	500	< 50 µV	Config as 2- or 4-wire
34925A	40/80-channel optically isolated FET multiplexer	± 80 V	0.02A	1 MHz	1000	< 3 µV	Config as 1-, 2- or 4-wire
Matrix modules							
34931A	Dual 4x8 armature matrix	± 300 V	1A/2A	30 MHz	100	< 3 µV	Backplane expandable
34932A	Dual 4x16 armature matrix	± 300 V	1A/2A	30 MHz	100	< 3 µV	Backplane expandable
34933A	Dual/Quad 4x8 reed matrix	± 150 V	0.5A/1.5A	30 MHz	500	< 50 µV	Backplane expandable Config as 1- or 2-wire
34934A	Quad 4x32 reed matrix	+/–100V	0.5A/0.5A	20MHz	500	< 50 µV	Row expansion kit. Config as 1- or 2-wire
General-purpose modules							
34937A	28-channel Form C and 4-channel Form A	+/–300 V +/–250 VAC	1A/2A 5 A	10 MHz	N/A	< 3 µV < 3 µV	
34938A	20-channel 5-amp Form A	+/–250 VAC	5A/8A	1 MHz	N/A	< 3 µV	
34939A	64-channels Form A	+/–100V	1A/2A	10MHz	N/A	< 3 µV	
Module	**Description**	**Insertion loss**	**Isolation**	**Freq range**	**VSWR**	**Input impedence**	**Comments**
RF and microwave modules							
34941A	Quad 1x4 50 ohm 3 GHz RF multiplexer	0.6 dB	> 58 dB	3 GHz	< 1.25	50 Ω	@ 1 GHz
34942A	Quad 1x4 75 ohm 1.5 GHz RF multiplexer	0.6 dB	> 60 dB	1.5 GHz	< 1.35	75 Ω	@ 1 GHz
34945A/ 34945EXT	Microwave switch/attenuator driver	Can drive up to 64 external switch coils; 32 SPDT switches, 8 multiport switches, 8 attenuators, or your own combination. Expand with additional 34945EXTs.					
34946A	Dual 1x2 SPDT terminated microwave switch	< 0.42 dB < 0.69 dB < 0.8 dB	> 85 dB > 67 dB > 60 dB	4 GHz or 20 GHz 26.5 GHz	< 1.15 < 1.30 < 1.6	50 Ω	@ 4 GHz @ 20 GHz @ 26.5GHz
34947A	Triple 1x2 SPDT unterminated microwave switch	< 0.42 dB < 0.69 dB < 0.8 dB	> 85 dB > 67 dB > 60 dB	4 GHz or 20 GHz 26.5 GHz	< 1.15 < 1.30 < 1.6	50 Ω	@ 4 GHz @ 20 GHz @ 26.5GHz
System control modules		**Description**					
34950A	64-bit digital I/O with memory and counter	Eight 8-bit digital I/O channels with programmable polarity, thresholds up to 5 V, with handshaking protocols and pattern memory. Two 10 MHz frequency counter and programmable clock output to 20 MHz.					
34951A	4-channel isolated D/A converter with waveform memory	Output DC voltage up to ± 16 V or DC current up to ± 20 mA. Output waveforms with a 200 kHz update rate and 16 bits of resolution. Use on-board memory to create point-to-point waveforms with more than 500,000 points.					
34952A	Multifunction module with 32-bit DIO, 2-ch D/A and totalizer	Four 8-bit digital I/O channels, two ± 12-V analog outputs, and a 100 kHz gated totalizer.					
34959A	Breadboard module	Create your own custom designs with access to the +12 V and +5 V supplies, 16 GPIO ports and 28 relay drive lines.					

34980A multiplexer switch modules

The 34980A multiplexer modules can be used to connect one of many different points to a single point. You can connect to an external instrument, or scan multiple analog signals to the internal DMM.

Choose from the following features:

- 1-wire, 2-wire, or 4-wire configurations
- High voltage—up to 300 V, 1 A
- High density—70 2-wire or 80 1-wire channels
- Scan up to 1000ch/sec with the 34925A
- Bandwidths up to 45 MHz
- Temperature measurements with built-in thermocouple reference junction (34921T)
- AC or DC current measurements without external shunts
- Flexible connections via standard 50- or 78- pin Dsub cables or detachable terminal blocks

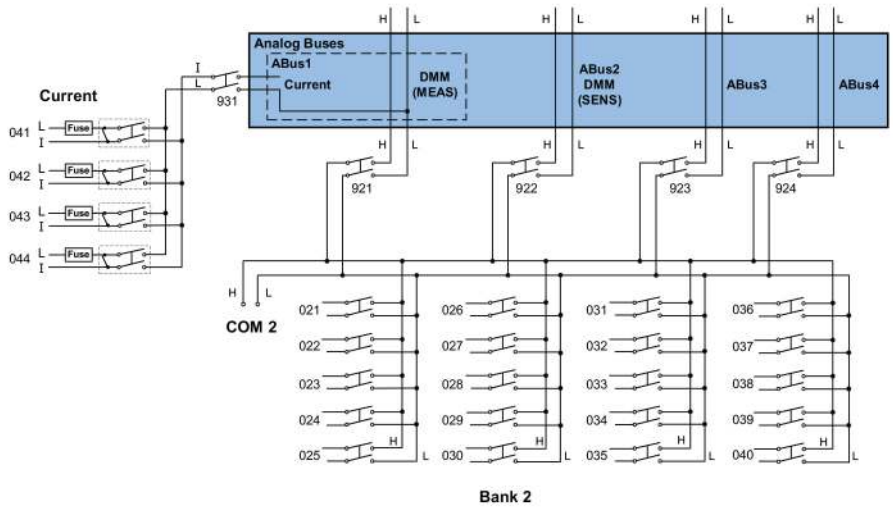

Figure 4. 34921A 40-channel armature multiplexer with low thermal offset (bank 2)

Table 2. Multiplexer measurement functions

	Voltage AC/DC	Current AC/DC	Freq/ Period	Ω 2-Wire	Ω 4-Wire	Thermo-couple	RTD 2-Wire	RTD 4-Wire	Thermistor
34921A Armature Multiplexer	Yes	Yes	Yes	Yes	Yes	Yes	Yes	Yes	Yes
34922A Armature Multiplexer	Yes	No	Yes	Yes	Yes	Yes	Yes	Yes	Yes
34923A Reed Multiplexer (2-wire)	Yes	No	Yes	Yes	Yes	Yes	Yes	Yes	Yes
34923A Reed Multiplexer (1-wire)	Yes	No	Yes	Yes	No	Yes	Yes	No	Yes
34924A Reed Multiplexer	Yes	No	Yes	Yes	Yes	Yes	Yes	Yes	Yes
34925A FET Multiplexer (2-wire)	Yes	No	Yes	Yes	es	Yes	No	Yes	No
34925A FET Multiplexer (1-wire)	Yes	No	Yes	Yes	No	Yes	No	No	No

NOTE: See User's Guide for additional information.

Multiple multiplexers can connect to the built-in analog buses, allowing you to scan up to 560 2-wire channels or 640 1-wire channels in a single mainframe. The 34921A also offers 4 channels for directly measuring current. Or if you need more current channels, shunts can be added to the terminal block for easy current measurements.

The multiplexer modules feature break-before-make connections to ensure that no two signals are connected to each other during a scan. Or, if you prefer, you can control switching manually to create your own switch configuration. All the multiplexer switches have a relay counter to help predict when relays need to be replaced.

NOTE: The 34923A and 34924A have 100 ohm input protection resistors that limit current and protect the reed relays.

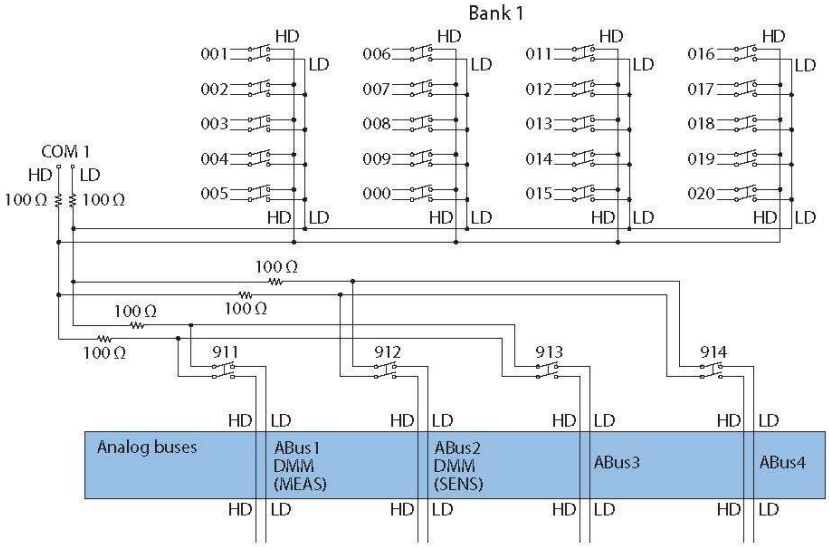

Figure 5. 34923A 40-channel reed multiplexer (bank 1 shown)

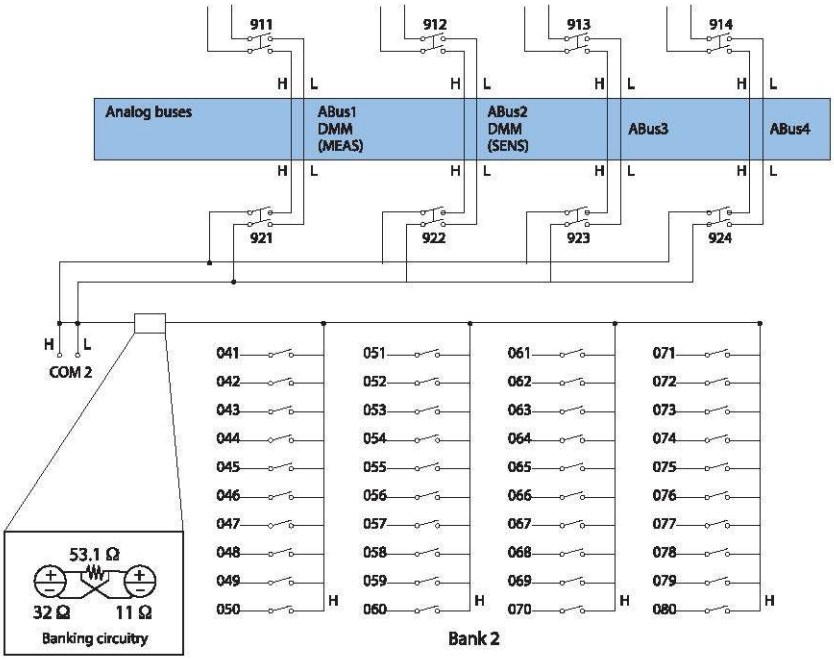

Figure 6. 34925A 40/80-channel optically isolated FET mux (shown in 1-wire mode bank 2)

Table 3. Multiplexer selection table—specifications and characteristics

	34921A	34922A	34923A	34924A	34925A
Channels/configurations	40 2-wire 20 4-wire 4-current 1.5 A Fused	70 2-wire 35 4-wire	80 1-wire 40 2-wire 20 4-wire	70 2-wire 35 4-wire	80 1-wire 40 2-wire 20 4-wire
Switch type	Armature latching	Armature latching	Reed	Reed	Optically isolated FET
Input characteristics (per channel)					
Max volts	± 300 V [1]	± 300 V [1]	± 150 V peak [2]	± 150 V peak [2]	± 80 V peak [2]
Max current (DC, AC RMS) Switch current Carry current	 1 A 2 A	 1 A 2 A	 0.5 A [5]/ 0.05 A [11] 1.5 A [5]/ 0.05 A [11]	 0.5 A [5]/ 0.05 A [11] 1.5 A [5]/ 0.05 A [11]	 0.02 A [8]
Power (W, VA) [6]	60 W	60 W	10 W	10 W	1.6 W
Volt-Hertz limit	108	108	108	108	107
Initial closed channel res [3][12]	< 1.5 Ω	< 1.5 Ω	< 1.5 Ω [5]/200 [11] nominal	< 1.5 Ω [5]/200 [11] nominal	< 700 Ω
General specifications					
Offset voltage [3]	< 3 µV	< 3 µV	< 50 µV < 100 uV 1-wire	< 50 uV	< 3 µV
DC Isolation (ch-ch, ch-earth)	>10 G Ω	>10 GΩ	>10 GΩ >	10 GΩ	>10 GΩ
Leakage current [3]	N/A	N/A	N/A	N/A	20 nA [9]
T/C cold junction accuracy [3, 10]	< 1°C	N/A	N/A	N/A	N/A
AC characteristics					
Bandwidth at terminal block [4]	45 MHz	25 MHz	45 MHz [5]/4 MHz 10 MHz 1-wire	25 MHz [5]/4 MHz [11]	1 MHz
Crosstalk at terminal block (ch-ch) [4] 300 kHz 1 MHz 20 MHz 45 MHz	 –75 dB –75 dB –50 dB –40 dB	 –75 dB –75 dB –50 dB 	 –75 dB –75 dB –50 dB –40 dB	 –75 dB –70 dB –45 dB 	 Not recommended for RF signal switching
Capacitance at terminal block HI-LO LO – earth	 150 pF 150 pF	 250 pF 200 pF	 130 pF 120 pF	 200 pF 170 pF	 100 pF 300 pF (600 pF 1-wire)

[1] DC or AC RMS voltage, channel-to-channel or channel-to-earth

[2] Peak voltage, channel-to-channel or channel-to-earth

[3] Into analog bus. System errors are included in the internal DMM measurement accuracy specifications

[4] 50 Ω source, 50 Ω load, differential measurements verified with 4-port network analyzer (Sdd21)

[5] With input resistors bypassed. Bypassing resistors will reduce lifetime of relays. See the rated load relay life characteristics.

[6] Limited to 6 W of channel resistance power loss per module

[7] Speeds are for 2-wire ohms or DCV, 4 1/2 digits, delay 0, display off, autozero off, and within bank

[8] DC or peak AC current

[9] Ambient temperature < 30°C

[10] Includes 0.5°C temperature reference sensor and 0.5°C terminal block isothermal gradient error, measured under worst case loading of the mainframe; see User's Guide for information on supported external reference sensors

[11] With input protection resistors: 2 x 100 Ω ±5%; 0.5W ; TC = ±200 ppm/°C. The series resistance of the 34923/24/25 limits the use of the 100 Ω range.

[12] Channel resistance is typically < 1.5 Ω but can go as high as 50 Ω when a channel is used in measurement applications with < 10 mA load current. Increased relay channel resistance for measurements with load currents below 10 mA can occur on cards that have been out of service or following relay inactivity for periods of greater than 1 week. Switching relays for 2K cycles prior to use may reduce the variation in channel resistance. Applies to the 34921A and 34922A. Keysight recommends the use of 4-wire Ohms for resistance measurements. For high accuracy voltage measurements, select the DMM input resistance setting of >10 G ohms to minimize the impact of relay contact resistance.

Table 3. Multiplexer selection table—specifications and characteristics—continued

General characteristics	34921A	34922A	34923A	34924A	34925A
Relay life, typical					
No load	100 M	100 M	1000 M	1000 M	Unlimited within FET banks
10 V, 100 ma	10 M	10 M	10 M	10 M	Unlimited within FET banks
Rated load	100 k	100 k	10 k	10 k	Unlimited within FET banks
Scanning speeds [7]	100 ch/sec	100 ch/sec	500 ch/sec	500 ch/sec	1000 ch/sec
Open/ close time, typical	4 ms/4 ms	4 ms/4 ms	0.5 ms/0.5 ms	0.5 ms/0.5 ms	0.25 ms/0.25 ms
Analog bus backplane connection	Yes	Yes	Yes	Yes	Yes

[1] DC or AC RMS voltage, channel-to-channel or channel-to-earth

[2] Peak voltage, channel-to-channel or channel-to-earth

[3] Into analog bus. System errors are included in the internal DMM measurement accuracy specifications

[4] 50 Ω source, 50 Ω load, differential measurements verified with 4-port network analyzer (Sdd21)

[5] With input resistors bypassed. Bypassing resistors will reduce lifetime of relays. See the rated load relay life characteristics.

[6] Limited to 6 W of channel resistance power loss per module

[7] Speeds are for 2-wire ohms or DCV, 4 1/2 digits, delay 0, display off, autozero off, and within bank

[8] DC or peak AC current

[9] Ambient temperature < 30°C

[10] Includes 0.5°C temperature reference sensor and 0.5°C terminal block isothermal gradient error, measured under worst case loading of the mainframe; see User's Guide for information on supported external reference sensors

[11] With input protection resistors: 2 x 100 Ω ±5%; 0.5W ; TC = ±200 ppm/°C. The series resistance of the 34923/24/25 limits the use of the 100 Ω range.

[12] Channel resistance is typically < 1.5 Ω but can go as high as 50 Ω when a channel is used in measurement applications with < 10 mA load current. Increased relay channel resistance for measurements with load currents below 10 mA can occur on cards that have been out of service or following relay inactivity for periods of greater than 1 week. Switching relays for 2K cycles prior to use may reduce the variation in channel resistance. Applies to the 34921A and 34922A. Keysight recommends the use of 4-wire Ohms for resistance measurements. For high accuracy voltage measurements, select the DMM input resistance setting of >10 G ohms to minimize the impact of relay contact resistance.

34980A matrix switch modules

The 34980A matrix modules are full crosspoint matrices that allow you to connect any row to any column. This is a convenient way to connect multiple test instruments to multiple points on a device under test.

Choose from the following features:

- Latching armature relays—300 V, 1 A
- High-speed reed relays—150 V, 0.5 A
- Configurable dual 4x8, dual 4x16 or quad 4x32 modules
- Single-wire configuration (34933A or 34934A)
- High density matrix with automatic surge protection and row disconnect for flexible measurements (34934A)
- Analog bus expandable rows to create larger matrices (34931A, 32A, 33A)
- Connections via standard 50 or 78-pin Dsub cables or detachable terminal block

Each cross-point in the matrix switch has two wires—a high and a low for the measurement. Or, if you prefer, the 34933A and 34934A can be configured as a single-wire matrix, increasing the number of channels.

The 34933A also has in-rush resistors on each column for added protection. The 34934A also has in-rush protection resistors, but also has an automatic bypass switch for flexibility in making low-level measurements. Row disconnect switches also reduce the capacitance loading when combining modules to create larger matricies.

Multiple matrix modules can be combined through the analog bus or the row expansion kit (34934A only) to create a larger matrix. The matrix can then be connected to the internal DMM for easy measurements.

Combine your matrix with a multiplexer switch to achieve the desired switching topology and get a lower-cost solution with better specifications. All the matrix switches include a relay counter to help predict when relays need to be replaced. Use the sequencing feature to easily change between different cross-point setups.

NOTE: The 34933A and 34934A have 100 ohm input protection resistors to limit current and protect the reed relays

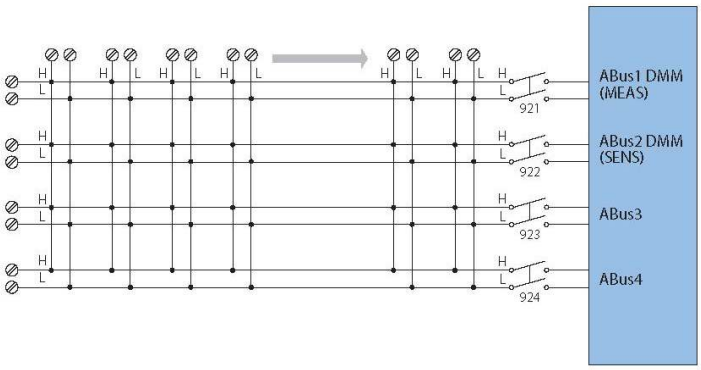

Figure 7. 34932A dual 4x16 armature matrix

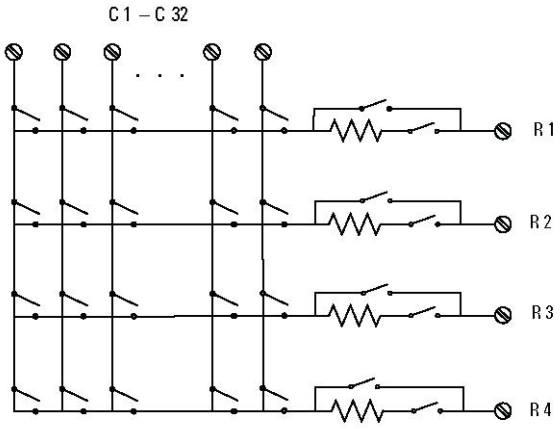

Figure 8. 34934A quad 4x32 matrix (1 of 4 matricies shown)

Table 4. Matrix selection table—specifications and characteristics

	34931A	34932A	34933A	34934A
Channels/configurations	dual 4x8 8x8 4x16	dual 4x16 8x16 4x32	dual 4x8 8x8 4x16 quad 4x8, 1-wire	quad 4x32 4x128 8x64 16x32
Switch type	Armature latching	Armature latching	Reed non-latching	Reed non-latching
Input characteristics (per channel)				
Max volts	± 300 V [1]	± 300 V [1]	± 150 V peak [2]	± 100 V peak
Max current (DC, AC RMS) Switch current Carry current	 1 A 2 A	 1 A 2 A	 0.5 A [5]/0.05 A [8] 1.5 A [5]/0.05 A [8]	 0.5 A 0.5 A
Power (W, VA) [2, 6]	60 W	60 W	10 W [7]	10 W
Volt-Hertz limit	10^8	10^8	10^8	10^8
Initial closed channel res [3][9]	< 1.5 Ω	< 1.5 Ω	< *1.5* Ω [5]/*200* Ω [8] nominal	< 1Ω/100 Ω
General Specifications				
Offset voltage [3]	< 3 uV	< 3 uV	< 50 uV < 100 uV 1-wire	< 20 uV < 50 uV 1-wire
DC Isolation (ch-ch, ch-earth)	> 10G Ω	> 10G Ω	> 10G Ω	10G Ω
AC characteristics				
Bandwidth at terminal block [4]	30 MHz	30 MHz	30 MHz [5]/4 MHz [8] 2 MHz 1-wire	35 MHz 2-wire 15 MHz 1-wire
Crosstalk at terminal block (ch-ch) [4] 300 kHz 1 MHz 20 MHz	 –65 dB –55 dB –30 dB	 –65 dB –55 dB –30 dB	 –65 dB –55 dB –40 dB	 –65 dB –55 dB –33 dB
Capacitance at terminal block HI-LO LO – earth	 50 pF 80 pF	 50 pF 80 pF	 80 pF 75 pF	 45 pF 250 pF
General characteristics				
Relay life, typical No load 10 V, 100 mA Rated load	 100 M 10 M 100 k	 100 M 10 M 100 k	 1000 M 10 M 10 k	 1000 M operations
Open/close time	4 ms/4 ms	4 ms/4 ms	0.5 ms/0.5 ms	0.35 ms/0.10 ms
Analog bus backplane connection	Bank 2	Bank 2	Bank 2	No

[1] DC or AC RMS voltage, channel-to-channel or channel-to-earth

[2] Peak voltage, channel-to-channel or channel-to-earth

[3] Into analog bus. System errors are included in the internal DMM measurement accuracy specifications

[4] 50 Ω source, 50 Ω load, differential measurements verified (Sdd21)

[5] With input resistors bypassed. Bypassing resistors will reduce lifetime of relays. See the rated load relay life characteristics.

[6] Limited to 6 W channel resistance power loss per module

[7] Power restrictions allow only 20 channels to be closed at one time

[8] Protection Resistors:
34933A - 100Ω ±5%; 0.5W; TC = ±200ppm/°C.
34934A - 100Ω ±1%; 0.25W; TC = ±100ppm/°C.
If this resistance is not bypassed in the low side source line of a 4-wire resistance measurement, the 100 Ω range is limited.

[9] Channel resistance is typically < 1.5 Ω but can go as high as 50 Ω when a channel is used in measurement applications with < 10 mA load current. Increased relay channel resistance for measurements with load currents below 10 mA can occur on cards that have been out of service or following relay inactivity for periods of greater than 1 week. Switching relays for 2K cycles prior to use may reduce the variation in channel resistance. Applies to the 34931A and 34932A. Keysight recommends the use of 4-wire Ohms for resistance measurements. For high accuracy voltage measurements, select the DMM input resistance setting of > 10 G ohms to minimize the impact of relay contact resistance.

34980A general-purpose switch modules

The 34980A general-purpose switches can be used to route signals or to control other system devices. These switches are ideal for device actuation and switching loads or power supplies.

Choose from the following features:

- Form C channels up to 1 A, 50 W
- Form A channels up to 5 A, 150 W
- Armature latching relays
- Simultaneous channel switching
- Temperature sensor to detect overheating conditions
- Connections via standard 50 or 78-pin Dsub cables or detachable terminal block

The 34937A is the most versatile general purpose switch with 28 Form C channels that can switch up to 1 A of current. In addition, this module has four Form A channels that can switch up to 5 A of current. For power switching applications, the 34938A has 20 5-amp channels in a Form A topology. Each Form A general-purpose switch can handle up to 150 W, enough for many power line switching applications. For high density applications the 34939A offers 64 Form A channels for switching up to 1A and carry currents up to 2A.

The general purpose switches contain latching armature relays where multiple channels can be closed at the same time. Additionally, for switching reactive loads, the optional terminal blocks have pads for snubbing circuits.

The built-in relay counter helps predict when relays need to be replaced.

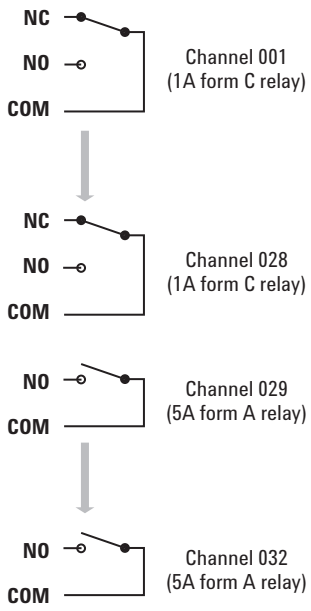

Figure 9. 34937A 32-channel Form A/ Form C switch

Table 5. GP actuator selection table—specifications and characteristics

	34937A	34938A	34939A
Channels/configurations	28 Form C 4 Form A	20 Form A	64 Form A
Switch type	Armature, latching	Armature, latching	Armature, latching
Input characteristics (per channel)			
Max volts (DC, AC RMS) [1]	Form C – 300 V Form A – 30 VDC/250 VAC	30 VDC/250 VAC	+/- 100 V peak
Max current (DC, AC RMS)	Form C – 1 A (2 A carry) Form A – 5 A switch (8 A carry)	5 A switch (8 A carry)	1A switch (2A carry)
Power (W, VA) [2]	Form C –60 W Form A – 150 W	150 W	60 W
Volt-Hertz limit	10^8	10^8	10^8
General specifications			
Offset voltage	3 µV	3 µV	3 µV
Initial closed channel res	Form C – 125 mΩ Form A – 50 mΩ	< 60 mΩ	< 125 mΩ
DC Isolation (ch-ch, ch-earth)	> 10G Ω	> 10G Ω	10G Ω
AC characteristics			
Bandwidth at terminal block [3]	10 MHz	1 MHz	10 MHz
Channel Isolation at terminal block [3] 100 kHz 1 MHz 10 MHz	 55 dB 35 dB 15 dB	 60 dB 40 dB	 45 dB 25 dB 5 dB
Capacitance at terminal block CH – CH CH – earth	 Form C 12 pF/ Form A 10 pF Form C 21 pF/Form A 18 pF	 65 pF 105 pF	 20 pF 70 pF
General characteristics			
Relay life no load/rated	Form C – 100 M/100 k Form A – 50 M/30 k	50 M/30 k	> 100 M/100 k
Open/close time	Form C – 4 ms/4 ms Form A – 10 ms/10 ms	10 ms/10 ms	4 ms / 4 ms
Initial/reset relay state	Form C – maintain state Form A – user configurable	user configurable	maintain
Analog bus backplane connection	No	No	No

[1] DC or AC RMS voltage, channel-to-channel or channel-to-earth

[2] Limited to 6 W of channel resistance power loss per module

[3] 50 Ω source, 50 Ω load, differential measurements verified (S21)

34980A RF and microwave switch modules

The 34980A offers a variety of RF and microwave switch modules—RF multiplexers, SPDT switching from DC to 26.5 GHz, or a switch/ attenuator driver module that allows you to control switches or attenuators external to the 34980A mainframe.

34941A/42A—from DC to 3 GHz The RF switch modules can be used to switch signals from DC to 3 GHz and above. This can be useful for switching signals between oscilloscopes, spectrum analyzers, network analyzers, and other RF test equipment.

Choose from the following features:

- 50- or 75-ohm Quad 4-channel multiplexers
- DC to 3 GHz
- 30 V, 0.5 A, 10 W

The 34941A and 34942A are configured as four independent 1x4 RF multiplexers on a single module. Multiple banks can be connected together to create a larger multiplexer. To prevent ground loops, individual multiplexers are isolated from each other and from the mainframe's chassis. However, the multiplexer channels can be chassis grounded with a simple change. Both 50-ohm and 75-ohm versions are available.

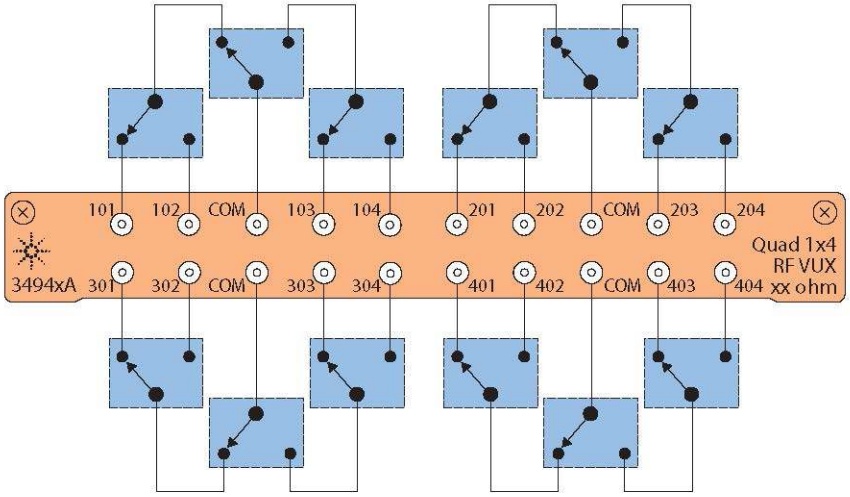

Figure 10. 34941A Quad 1x4 50 ohm 3 GHz multiplexer

34941A typical initial crosstalk

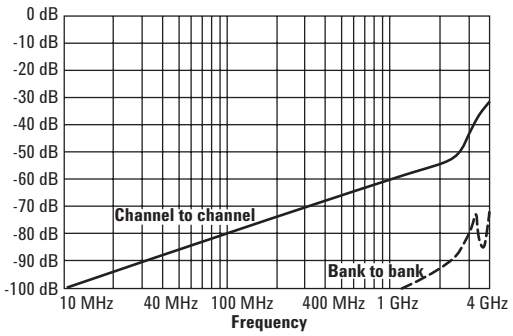

34941A typical initial insertion loss

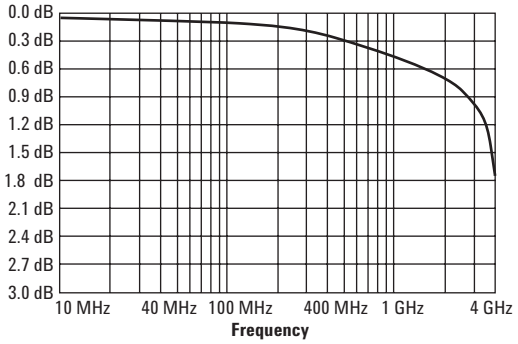

34941A typical initial VSWR

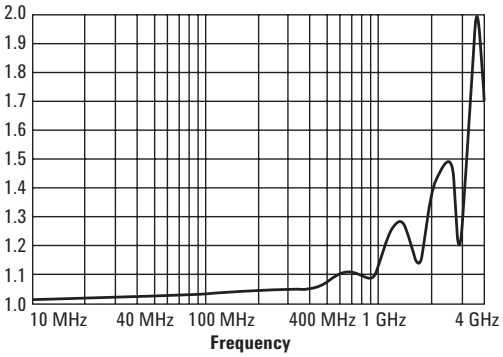

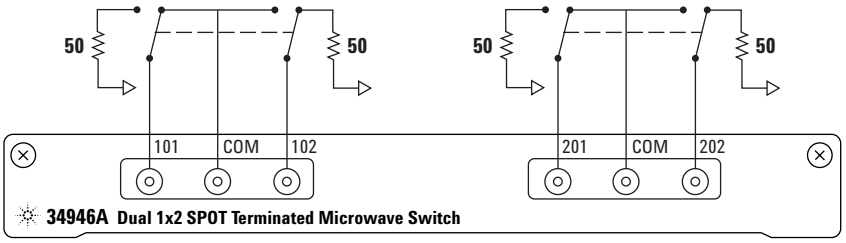

Figure 11. 34946A dual 1x2 SPDT terminated microwave switch

34946A/47A—from DC to 26.5 GHz

For applications where you need only a few high-frequency switches, the 34946A and 34947A offer single-pole, double-throw switches in either 4GHz, 20GHz or 26.5GHz options. These modules internally mount two or three independent Keysight N1810 series coaxial switches. These switches are well known for their excellent insertion loss, isolation and VSWR specifications.

Switch read back capabilities allow you to query the position of the switch. You can choose higher density with the unterminated switches, or select the terminated switches to maintain impedance match.

34946A/47A option 001

These modules can also be ordered without switches installed. This give you the capability to install your own N1810 series switches or use the module to control the N1810 Series switches outside the mainframe.

N1810 minimum required switch options		
Coil Voltage	option 124	24 Vdc coil
DC Connector	option 201	“D” subminiature 9 pin female
Drive	option 402	position indicators

34942A typical initial crosstalk

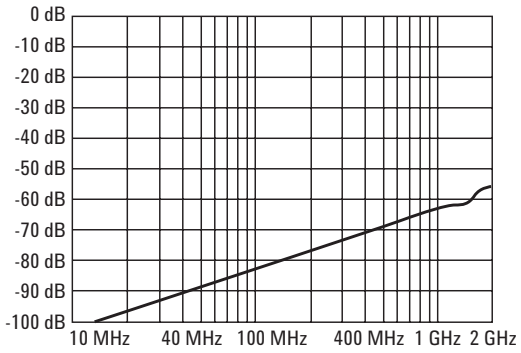

34942A typical initial insertion loss

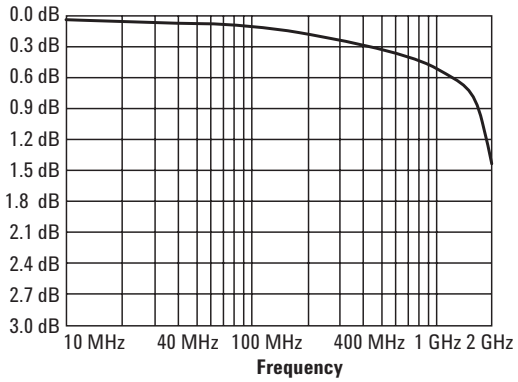

34942A typical initial VSWR

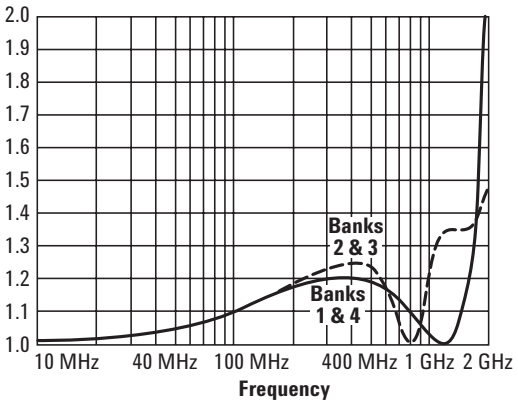

Table 6. RF and microwave selection table—specifications and characteristics

	DC to 3 GHz		DC to 26.5 GHz [3]	
	34941A	**34942A**	**34946A**	**34947A**
Channels	quad 1x4	quad 1x4	2 SPDT	3 SPDT
Switch type	50 Ω unterminated, latching relays	75 Ω unterminated, latching relays	50 Ω terminated	50 Ω unterminated
RF characteristics				
Frequency range [2]	DC to 3 GHz	DC to 1.5 GHz	DC to 4 GHz, 20 GHz or 26.5 GHz	DC to 4 GHz, 20 GHz or 26.5 GHz
Insertion loss [2] (< 40 C/ 80% RH)			DC to 4 GHz < 0.42 dB, @ 20GHz < 0.69 dB, @ 26.5GHz < 0.8 dB	DC to 4 GHz < 0.42 dB, @ 20 GHz < 0.69 dB @ 26.5GHz < 0.8 dB
100 MHz	0.15 dB	0.15 dB		
1 GHz	0.60 dB	0.60 dB		
3 GHz	1.40 dB	N/A		
VSWR			DC to 4 GHz < 1.15, @ 20 GHz < 1.30, @ 26.5GHz < 1.6	DC to 4 GHz < 1.15, @ 20 GHz < 1.30, @ 26.5GHz < 1.6
100 MHz	1.03	1.15		
1 GHz	1.25	1.35		
3 GHz	1.55	N/A		
Isolation (dB) [2]	Contact factory	Contact factory	DC to 4 GHz > 85 dB, @ 20 GHz > 67 dB, @ 26.5GHz > 60 dB	DC to 4 GHz > 85 dB, @ 20 GHz > 67 dB, @ 26.5GHz > 60 dB
100 MHz	80 dB	80 dB		
1 GHz	58 dB	60 dB		
3 GHz	40 dB	N/A		
Spurious noise below 1.3 GHz	–140 dBm	–140 dBm	80 dB	80 dB
Risetime	< 80 ps	< 160 ps	N/A	N/A
Signal delay	< 1 ns	< 1 ns	N/A	N/A
Capacitance	< 30 pF	< 30 pf	N/A	N/A
Switching characteristics				
Max volts [1]	30 V	30 V	7 VDC	7 VDC
Max current	0.5 A	0.5 A	N/A	N/A
Max power (W)	10 W [5]	10 W [5]	1 W @ 7 VDC, 50 W peak [4]	1 W @ 7 VDC, 50 W peak [4]
Offset voltage	10 µV	10 µV	N/A	N/A
Initial channel resistance	1 Ω	1 Ω	N/A	N/A
Volt-Hertz limit	2×10^{10}	2×10^{10}		
General characteristics				
Relay life	300,000 at 30 V/10 mA load; 100,000 at 10 W load RF SAmeas	300,000 at 30 V/10 mA load 100,000 at 10 W load RF SAmeas	> 5 M cycles, 1 M w/drive 28-32 VDC	> 5 M cycles, 1 M w/drive 28-32 VDC
Open/close time	18 ms/18 ms	18 ms/18 ms	< 15 ms/15 ms	< 15 ms/15 ms
Connector type	Female SMA	Mini 75 Ω SMB	Female SMA	Female SMA
Coil voltage	N/A	N/A	24 VDC	24 VDC
Analog bus backplane connection	No	No	No	No

[1] Channel-to-earth
[2] 50 Ω source, 50 Ω load (75 Ω for 34942A)
[3] For more detailed switch specifications, see the Keysight N1810TL, N1811TL, N1812UL for 34946A and N1810UL for the 34947A.
[4] 10 usec maximum duration
[5] Max power is 1 W between 30 MHz and 1 GHz for CISPR 11 compliance

34945A/34945EXT microwave switch/attenuator driver

This module allows you to control switches attenuators, and other devices external to the 34980A. The 34945A/ 34945EXT provides the power and control signals for many of the most popular microwave switches and attenuators. One 34945A/34945EXT combination can drive up to 64 switch coils—that's 32 standard SPDT switches. The 34945A/EXT can be extended by adding additional 34945EXT boards. The first 34945EXT is powered by the mainframe. You can add up to seven additional 34945EXT boards with user supplied power. Multiple switch operations are performed in sequential order, or for faster, simultaneous switching, you can connect an external power supply to the 34945EXT.

The Y1150A-Y1155A distribution boards enable simple connections to the external switches. The distribution boards plug onto the 34945EXT and are used to route the power and control signals from the driver module to the switches using standard cables.

The 34945A/34945EXT also has sensing capabilities that allows read back of the actual position of the switch or attenuator. Drive signals for LED indicators are also provided to give a visual indication of the switch position.

The following microwave switches and attenuators are supported with the Y1150AY1155A distribution boards:

- N181x/U9397x series SPDT switches
- 8762/3/4 series SPDT switches (screw terminals)
- 8765x coaxial switches
- 8766x/8767x/8768x multiport switches
- 87104x/106x/L710xx/L720xx multiport switches
- 87406x series matrix switches
- 87204x/206x series multiport switches
- 87606x series matrix switches
- 87222x/L7222 transfer switches
- 849x and 8490x series attenuators
- Other switches and devices through individual screw terminal connections

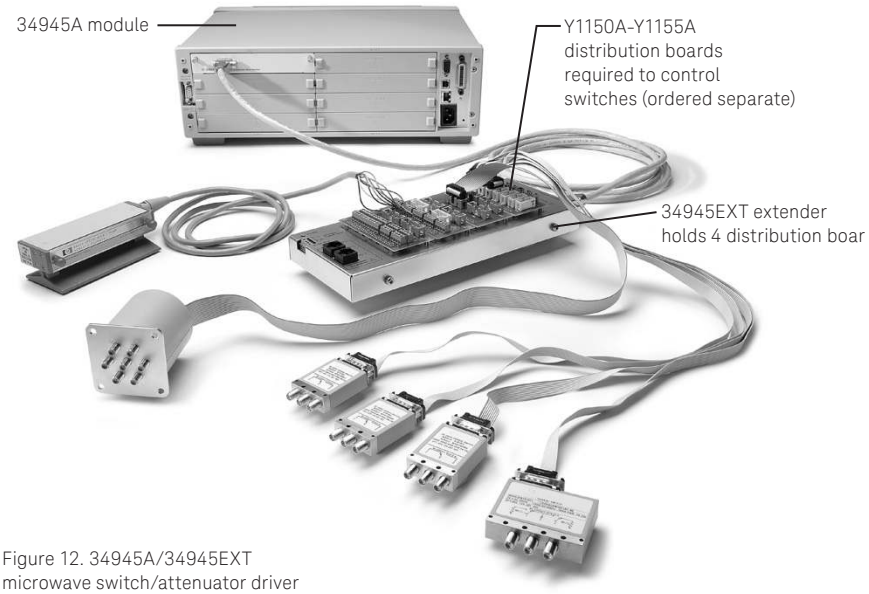

Figure 12. 34945A/34945EXT microwave switch/attenuator driver

General specifications	
34945EXT switch drive (64 channels, low side drive mode)	
Driver off voltage (max)	30 V
Driver off leakage current	500 µA
Driver on current (max)	600 mA
Driver on voltage (max)	0.5 V @ 600 mA
34945EXT switch drive (64 channels, TTL drive mode)	
Hi output voltage	3 V @ Iout = 2 mA
Lo output voltage	0.4 V @ Iin = 20 mA
Lo input Current	20 mA
34945EXT position indicator sense inputs	
Channels	64
Lo input voltage (max)	0.8 V
Hi input voltage (min)	2.5 V
Input resistance	>100 kΩ @ Vin ≤ 5 V
	>20 kΩ @ Vin > 5 V
Maximum input voltage	30 V
34945EXT switch drive power supply (34945EXT powered by 34945A)	
Voltage	24 V nominal (external power supply required for switches needing more than 24 V)
Current	100 mA continuous + 200 mA (15 msec pulse, 25% duty cycle)
34945EXT external power connection	
Voltage range	4.75 V to 30 V
Current limit	2 A
LED indicator (Current mode divers)	
Channels	64
Supply voltage	5 V nominal
LED drive current	5 mA nominal (prog 1-20 mA)
Driver compliance voltage	0.8 V
34945EXT dimensions	
11.2" x 4.5" x 1.5" high with distribution boards installed	

Maximum 8 34945 Ext's per mainframe

Switch drive control also available in L4445A and L4490A/91A RF Switch Platform.

NOTE: See Application Note, "Configuring an RF/Microwave Switch System," literature number 5989-2272EN, for configuration details.

34980A System Control Modules

34950A 64-bit digital I/O with memory and counter

This module can be used to simulate or detect digital patterns. It has eight 8-bit digital I/O channels with handshaking, pattern memory, two 10 MHz counters with gate functions, and a programmable clock output.

Digital input/output

The digital I/O bits are organized into two banks of 32-bits. The I/O bits can be configured and programmed as inputs or outputs in 8-bit channels. The digital outputs can be configured as active drive or open drain outputs with a 10 kΩ pull up. User supplied pull up resistors for up to 5 V outputs are also acceptable. The digital inputs have programmable thresholds up to 5 V for compatibility with most digital logic standards.

The onboard pattern memory can be used to select and output digital stimulus or bitstream patterns, or to capture external digital data. Each bank has independent memory and directional control so that one bank can output data while the other captures data. The memory can be divided up to 64 Kbytes per 8-bit channel.

Specifically, the digital I/O channels also have:

- Variable active high drive output from 1.65 V to 5 V or open drain
- Variable input thresholds from 0 V to 5 V
- Configurable handshaking protocols including synchronous, and strobe
- Programmable polarity
- Source or sink up to 24 mA with a I_{max} of 400 mA per module.
- Internal alarming for maskable pattern match
- 1 hardware pattern interrupt per bank
- Connections via standard 78-pin Dsub cables or detachable terminal block

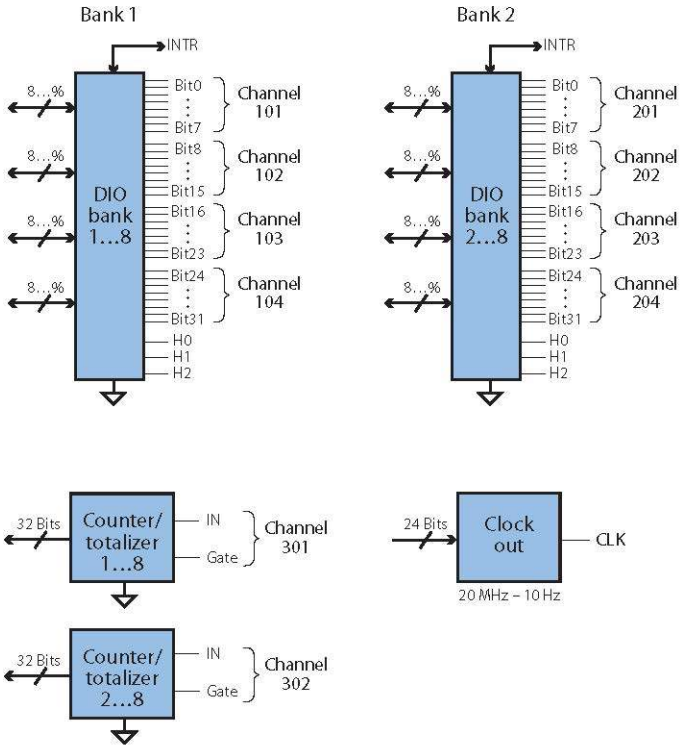

Figure 13. 34950A 64-channel digital I/O

Frequency counter/totalizer

The two channels can be used to count digital events, frequency, period, duty cycle, totalize, and pulse width. The counter/ totalizer also includes

- Programmable gate functionality
- Programmable input thresholds levels 0 V to 3 V

Digital input/output characteristics	
Eight 8-bit channels: 8 bits wide, input or output, non-isolated	
Vin	0 V – 5 V [1]
Vout	1.65 V – 5V [1, 2]
Iout	(max) 24 mA [2]
Frequency (max)	10 MHz [3]
I_{Load} (max)	400 mA
$t_{rise} + t_{fall}$ (typ)	6 ns [5]
Handshake lines	
Vin	0 – 5 V [4]
Vout	1.65 – 5 V [2, 4]
I out (max)	24 mA [2]
Frequency (max)	10 MHz
Counter function characteristics	
Max freq	10 MHz (max) 50% duty cycle
Vin	0 V – 5 V
Min rise/fall time	5 µsec
Totalizer function characteristics	
Maximum count	2^32 – 1 (4,294,967,296)
Max input freq	10 MHz (max), rising or falling edge programmable
Vin	0 V – 5 V
Gate input	0 V – 5 V
Min rise/fall time	5usec
System clock generator characteristics	
Frequency	20 MHz – 10 Hz configurable divideby-n 24-bits, programmable on/off
Vout	1.65 V – 5 V [2]
I out (max)	24 mA [2]
Accuracy:	100 ppm

[1] Configurable by 8-bit channel
[2] Lower current drive at lower voltages
[3] From memory with handshaking
[4] Configurable by bank
[5] 5 V, 50 pF load

34951A 4-channel isolated D/A converter with waveform memory

This module has four independent, isolated channels that output DC voltage up to ± 16 V or DC current up to ± 20 mA. The gain and offset can be adjusted on-the-fly. Each channel can be controlled manually, or use the onboard memory to download a waveform. The 500k of memory is global and can store up to 32 waveforms. Any waveform can be dynamically allocated among one or more channels and output as a point-topoint arbitrary waveform generator at up to 200k points/sec. You can use the standard sine, square or ramp wave shapes provided or define your own wave shape using over 500,000 points and output to a device under test. There is also a single CLK that can be divided down for each channel independently.

The calibration command connects the D/A converters to the internal DMM to be automatically calibrated. Connections to the module can be made via standard 50-pin Dsub cables or a detachable terminal block.

General specifications	
Maximum update rate:	200 kHz point-to-point
Monotonic:	to 16-bits
Isolation:	> 80 VDC/AC peak (chan-to-chassis or chan-to-chan)
Synchronization:	Software commands or external trigger
Internal/external CLK accuracy:	100 ppm
AC accuracy:	Not specified

DC voltage	
Amplitude:	± 16 V up to 10 mA
Resolution:	16-bits = 500 µV
Amplitude accuracy (DC):	± (0.05% + 3.0 mV) (90 days, Tcal ± 5°C or Cal:MOD?: ± 5°C)
Ripple and noise:	< 2 mVrms, 20 Hz to 250 kHz into 10 kΩ load
Settling time:	40 uS (-full scale to +full scale step, single channel, to rated accuracy)
Output impedance:	< 1 Ω with the load sensed
DC current	
Range:	± 20 mA
Resolution:	16-bit = 630 nA
Accuracy:	± (0.09% + 5.0 µV) (90 days, Tcal ± 5°C or Cal:MOD?: ± 5°C)
Ripple and noise:	< 2 µArms, 20 Hz to 250 kHz into 250 Ω
Compliance voltage:	± 12 V
Max open circuit voltage:	< ± 22 V

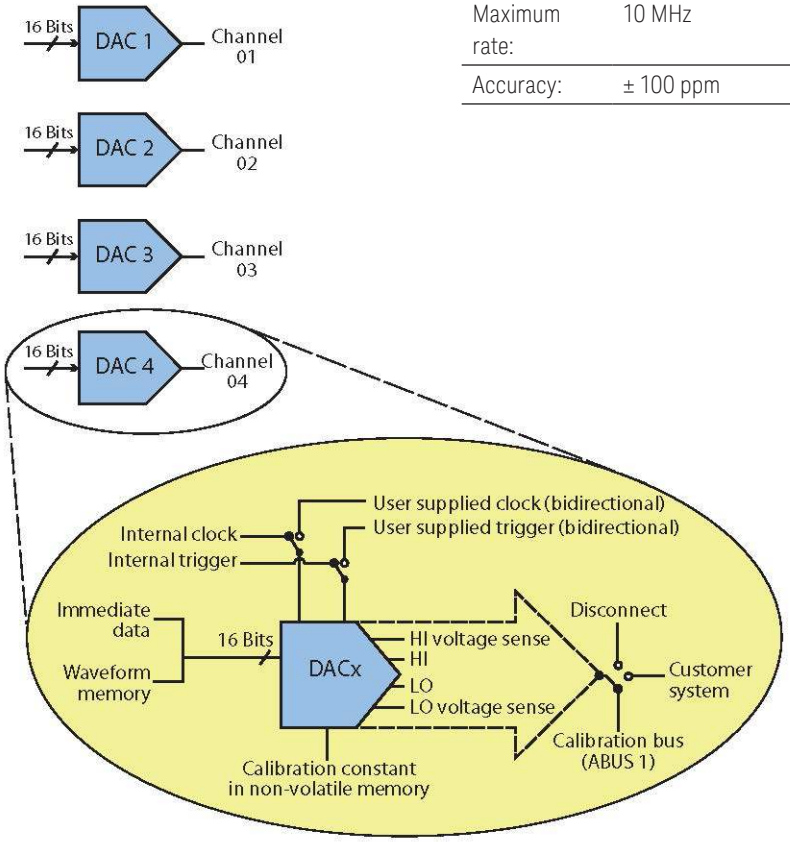

Figure 14. 34951A 4-channel isolated D/A converter

Phase-locking I/O trigger characteristics	
Trigger input	
Input level:	TTL compatible (3.3 V logic, 5 V tolerant)
Slope:	Rising or falling, selectable
Pulse width:	> 100 nS
Input impedance:	> 10 kΩ, DC coupled
Trigger output	
Level:	TTL compatible into 1 kΩ (3.3 V logic)
Output impedance:	50 Ω typical
Clock input	
Input level:	TTL compatible (3.3 V logic, 5 V tolerant)
Input impedance:	> 10 kΩ, DC
Maximum rate:	10 MHz
Clock output	
Level:	TTL compatible into 1k Ω (3.3 V logic)
Output impedance:	50 Ω typical
Maximum rate:	10 MHz
Accuracy:	± 100 ppm

34952A multifunction module with 32-bit DIO, 2-channel D/A and totalizer

The multifunction module offers the flexibility you need for system control. The 34952A has four 8-bit digital I/O channels, a 100- kHz gated totalizer, and two ± 12 V analog outputs—all on a single earth-referenced module. The digital inputs and totalizer input may be included in a scan list. Alarm limits for the digital and totalizer inputs are evaluated continuously, capturing and logging alarm conditions even between scans. Connections can be made via standard 50-pin Dsub cables or detachable terminal block. The 34952T terminal block has a pinout for connection to an external Opto 22 board.

Digital input/output characteristics	
Four 8-bits channels, 8 bits wide, input or output, non-isolated	
Vin(L)	< 0.8 V (TTL)
Vin(H)	> 2.0 V (TTL)
Vout(L)	< 0.8 V @ Iout = -400 mA per output
Vout(H)	> 2.4 V @ Iout = 1 mA
Vin(H) max	< 42 V with external open drain pull-up
Alarm	Maskable pattern match or state change
Speed	4 ms (max) alarm sampling
Latency	5 ms (typical) to 34980A alarm output
Read/write speed	95/s
Totalize input characteristics	
Max count	2^{26} - 1
Totalize input	100 kHz (max) rising or falling edge, programmable
Signal level	1 Vp-p (min) 42 Vpk (max)
Threshold	0 V or TTL
Gate input	TTL-Hi, TTL-Lo, or none
Count reset	Manual or read + reset
Read speed	85 rds/s
Analog output characteristics	
DAC 1, 2	± 12 V, non-isolated
Resolution	1 mV
IOUT	10 mA max
Settling time	1 ms to 0.01% of output
Accuracy 1 year	± (% of output + mV) (0.25% + 20 mV)
Temp. coefficient	± (0.015% + 1mV)/°C

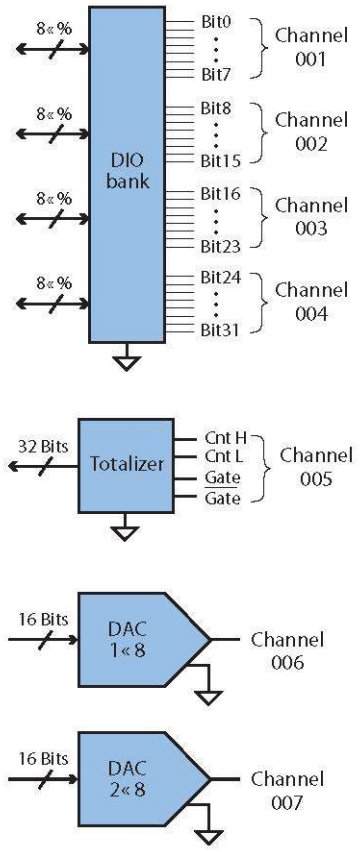

Figure 15. 34952A multifunction module

34959A breadboard module

Use this module to create your own custom designs inside the 34980A mainframe. You can control your custom circuits with access to both the +12 V and +5 V supplies, 28 relay drive lines and two 8-bit GPIO ports. Your design can be isolated from the analog buses or connected by loading the backplane switches. Simply mount your custom PC board or other components into the space provided and connect via the two ribbon connectors provided. The module is provided with two 50- or 78-pin Dsub connector openings. For custom connections, use the detachable flat faceplates for easy modification. You can program your circuitry using standard read and write commands in SCPI.

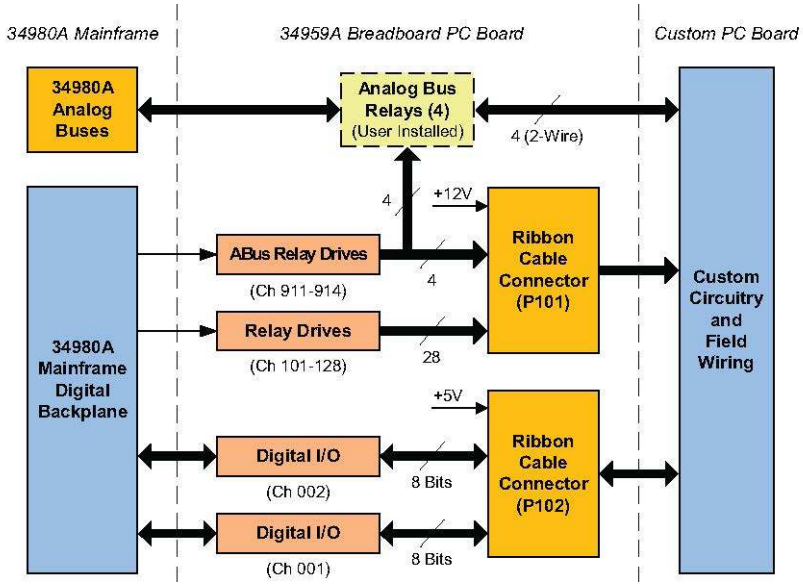

Figure 16. 34959A breadboard module

General specifications	
Max module power dissipation	6 W
Power available	
12 V regulation no load to full load	10%
5 V regulation no load to full load	5%
Max power from 12 V	6 W
Max power from 5 V	1 W
Relay drives	
Channels:	28, sink up to 100 mA
Max Input Voltage:	42 V
Leakage Current:	8 µA
GPIO ports	
Chan 1 and Chan 2:	8 configure bits as input or output
Chan 3:	3 output bits
High Input:	2 V min, 5.5 V max
Low Input:	0 V min, 0.8 V max
High Output:	2.4 V @ 4 mA, 3 V @ 500 µA
Low Output:	0.4 V @ 8 mA

Available space for internal board/components: 5.4 x 7.5 x either 0.9 inches height without PC board, or 0.7 inches high with PC board.

34980A system specifications and characteristics

DMM accuracy ± (% of reading + % of range)

Includes measurement error, switching error, and transducer conversion error

			Measurement including switch error [1]			
Function	**Range [4]**	**Frequency, etc.**	**24 hour [2,3] Tcal ± 1°C**	**90 days Tcal ± 5°C**	**1 year Tcal ± 5°C**	**Temperature coefficient/°C >Tcal ± 5°C**
DC voltage	100.0000 mV		0.0030 + 0.0035	0.0040 + 0.0040	0.0050 + 0.0040	0.0005 + 0.0005
(with 34921A/22A/	1.000000 V		0.0020 + 0.0006	0.0030 + 0.0007	0.0040 + 0.0007	0.0005 + 0.0001
31A/32A) [10] [11]	10.00000 V		**0.0015 + 0.0004**	**0.0020 + 0.0005**	**0.0035 + 0.0005**	**0.0005 + 0.0001**
Input impedance = Hi-Z	100.0000 V		0.003 + 0.0006	0.0045 + 0.0006	0.0055 + 0.0006	0.0005 + 0.0001
10 V range and below	300.0000 V		0.003 + 0.0020	0.0045 + 0.0030	0.0055 + 0.0030	0.0005 + 0.0003
True RMS AC	All ranges from					
voltage [5]	100.0000 mV	3 Hz-5 Hz	1.00 + 0.03	1.00 + 0.04	1.00 + 0.04	0.100 + 0.004
	to 100.0000 V	5 Hz-10 Hz	0.35 + 0.03	0.35 + 0.04	0.35 + 0.04	0.035 + 0.004
		10 Hz-20 kHz	**0.04 + 0.03**	**0.05 + 0.04**	**0.06 + 0.04**	**0.005 + 0.004**
		20 kHz-50 kHz	0.10 + 0.05	0.11 + 0.05	0.12 + 0.05	0.011 + 0.005
		50 kHz-100 kHz	0.55 + 0.08	0.60 + 0.08	0.60 + 0.08	0.060 + 0.008
		100 kHz-300 kHz [6]	4.00 + 0.50	4.00 + 0.50	4.00 + 0.50	0.20 + 0.02
	300.0000 V	3 Hz-5 Hz	1.00 + 0.05	1.00 + 0.08	1.00 + 0.08	0.100 + 0.008
		5 Hz-10 Hz	0.35 + 0.05	0.35 + 0.08	0.35 + 0.08	0.035 + 0.008
		10 Hz-20 kHz	0.04 + 0.05	0.05 + 0.08	0.06 + 0.08	0.005 + 0.008
		20 kHz-50 kHz	0.10 + 0.10	0.11 + 0.12	0.12 + 0.12	0.011 + 0.012
		50 kHz-100 kHz	0.55 + 0.20	0.60 + 0.20	0.60 + 0.20	0.060 + 0.020
		100 kHz-300 kHz [6]	4.00 + 1.25	4.00 + 1.25	4.00 + 1.25	0.20 + 0.05
Resistance [7]	100.0000 Ω	1 mA	0.0030 + 0.0035	0.008 + 0.004	0.010 + 0.004	0.0006 + 0.0005
	1.000000 kΩ	1 mA	0.0020 + 0.0006	0.008 + 0.001	0.010 + 0.001	0.0006 + 0.0001
	10.00000 kΩ	100 uA	**0.0020 + 0.0005**	**0.008 + 0.001**	**0.010 + 0.001**	**0.0006 + 0.0001**
	100.0000 kΩ	10 uA	0.0020 + 0.0005	0.008 + 0.001	0.010 + 0.001	0.0006 + 0.0001
	1.000000 MΩ	5.0 uA	0.002 + 0.001	0.008 + 0.001	0.010 + 0.001	0.0010 + 0.0002
	10.00000 MΩ	500 nA	0.015 + 0.001	0.020 + 0.001	0.040 + 0.001	0.0030 + 0.0004
	100.0000 MΩ	500 nA/10 MΩ	0.300 + 0.010	0.800 + 0.010	0.800 + 0.010	0.1500 + 0.0002
Frequency and	100 mV to 300 V	3 Hz-5 Hz	0.10	0.10	0.10	0.005
period [8]		5 Hz-10 Hz	0.05	0.05	0.05	0.005
		10 Hz-40 Hz	0.03	0.03	0.03	0.001
		40 Hz-300 kHz	**0.006**	**0.01**	**0.01**	**0.001**
DC current	10.00000 mA	< 0.1 V burden typ.	0.005 + 0.010	0.030 + 0.020	0.050 + 0.020	0.002 + 0.0020
(34921 only)	**100.0000 mA**	**< 0.6 V**	**0.010 + 0.004**	**0.030 + 0.005**	**0.050 + 0.005**	**0.002 + 0.0005**
	1.000000 A	< 2 V	0.050 + 0.006	0.080 + 0.010	0.100 + 0.010	0.005 + 0.0010
True RMS AC current	10.00000 mA	3 Hz-5 Hz	1.00 + 0.04	1.00 + 0.04	1.00 + 0.04	0.100 + 0.006
(34921A only)	and [5]	5 Hz-10 Hz	0.30 + 0.04	0.30 + 0.04	0.30 + 0.04	0.035 + 0.006
	1.0 A	**10 Hz-5 kHz**	**0.10 + 0.04**	**0.10 + 0.04**	**0.10 + 0.04**	**0.015 + 0.006**
	100.0000 mA [9]	3 Hz-5 Hz	1.00 + 0.5	1.00 + 0.5	1.00 + 0.5	0.100 + 0.006
		5 Hz-10 Hz	0.30 + 0.5	0.30 + 0.5	0.30 + 0.5	0.035 + 0.006
		10 Hz-5 kHz	0.10 + 0.5	0.10 + 0.5	0.10 + 0.5	0.015 + 0.006

[1] One hour warm-up and a fixed configuration with slow AC filter, sine wave input, and 6½ digits. Temperature within ± 5°C of temperature at calibration (Tcal between 18-28°C)

[2] 90 minute warm-up and a fixed configuration and 6½ digits. Temperature within ± 1°C of temperature at calibration (Tcal between 18-28°C)

[3] Relative to calibration standards

[4] 20% over range on all ranges except 300VDC and AC ranges and 1 ADC and AC current ranges

[5] For sine wave input > 5% of range; for inputs from 1% to 5% of range and < 50 kHz add 0.1% of range additional error; for AC filter slow

[6] Typically 30% of reading error at 1 MHz, limited to 1 x 108 volt-hertz

[7] Accuracy for 4-wire ohms. Add 4 ohms uncertainty (typ) for 2-wire ohms function due to conductor and contact resistance variability in the DMM. The 2-wire resistance accuracy can be improved by measuring a short on each channel and using the built-in y = Mx + b scaling function. See User Guide, Chapter 3. The series resistance of the 34923/24/25/33/34 limits the use of the 100 ohms resistance range. Keysight recommends the use of 4-wire ohms for resistance measurements. For high accuracy voltage measurements, select the DMM input resistance setting of > 10 G ohms to minimize the impact of relay contact resistance.

[8] For inputs >100mV; for inputs 10mV to 100mV multiply % of reading error X 10; for 1 sec aperture (6 1/2 digits)

[9] Specified only for inputs > 10 mA. For AC filter slow

[10] Add 50 uV error for 34923A/24A/33A and 7 µV error for the 34925A

[11] Voltage measurements using Fixed-Z input impedance for the 100 V and 300 V ranges.

Additional Low Frequency Error for ACV, ACI (% of reading)

Frequency	AC Filter Slow	AC Filter Medium	AC Filter Fast
10 Hz- 20 Hz	0	0.74	–
20 Hz - 40 Hz	0	0.22	–
40 Hz - 100 Hz	0	0.06	0.73
100 Hz - 200 Hz	0	0.01	0.22
200 Hz - 1 kHz	0	0	0.18
> 1 kHz	0	0	0

Additional Error for Frequency, Period (% of reading)

	Aperture (Digits)		
Frequency	1 second (6½ digits)	0.1 seconds (5½ digits)	0.01 seconds (4½ digits)
3 Hz- 5 Hz	0	0.12	0.12
5 Hz - 10 Hz	0	0.17	0.17
10 Hz - 40 Hz	0	0.2	0.2
40 Hz - 100 Hz	0	0.06	0.21
100 Hz - 300 Hz	0	0.03	0.21
300 Hz - 1 kHz	0	0.01	0.07
> 1 kHz	0	0	0.02

Temperature measurement accuracy

Temperature 1-year accuracy	Type	Best range [1]		Extended range [1]		Temperature coefficient/°C
Thermocouple	B	1100°C to 1820°C	1.2°C	400°C to 1100°C	1.8°C	0.03°C
(34921A only,	E	–150°C to 1000°C	1.0°C	–200°C to –150°C	1.5°C	0.03°C
includes cold	J	–150°C to 1200°C	1.0°C	–210°C to –150°C	1.2°C	0.03°C
junction accuracy	K	–100°C to 1200°C	1.0°C	–200°C to –100°C	1.5°C	0.03°C
on terminal block)	N	–100°C to 1300°C	1.0°C	–200°C to –100°C	1.5°C	0.03°C
	R	300°C to 1760°C	1.2°C	–50°C to 300°C	1.8°C	0.03°C
	S	400°C to 1760°C	1.2°C	–50°C to 400°C	1.8°C	0.03°C
	T	–100°C to 400°C	1.0°C	–200°C to –100°C	1.5°C	0.03°C
RTD	R_0 from 49 Ω to 2.1 K Ω	–200°C to 600°C	0.06°C			0.003°C
Thermistor	2.2 k, 5 k, 10 k	–80°C to 150°C	0.08°C			0.002°C

[1] For total measurement accuracy, add temperature probe error; for <1°C accuracy, an external fixed reference is required

Typical system speeds (Measurements made on a 3.2GHz PC running VB6 in Windows XP Pro)

Single Channel Reading times in msec		Direct measurements – direct to I/O (includes switch, measure time and I/O time)			Direct measurement to memory(GPIB)
Single channel [1] [2]		**GPIB msec**	**USB 2.0 msec**	**LAN (w/ VXI 11) msec**	**Measurement into memory msec**
Single channel, DCV		2.83	3.14	4.57	1.90
Single channel, ACV		5.00	5.35	5.75	4.00
Single channel, ohms		2.91	3.14	4.65	1.90
Single channel while changing scale (eg MEAS DCV 10 / MEAS DCV 1)		9.52	10.64	11.76	8.40
Single channel while changing function (eg. MEAS ACV / MEAS DCV)		128	120	120	120
Command execution time [3]					
34925A	Open or Close	0.7	0.9	1.6	
	Read?	2.9	3.3	4.7	
	Close/Read/Open	4.8	5.3	6.5	
	Init/*WAI	1.9	2.1	3	
	Close/Init/Open	3.7	4.1	4.7	
34923A	Open or Close	0.9	1.2	1.8	
	Read?	2.9	3.3	4.7	
	Close/Read/Open	5.3	5.8	6.5	
	Init/*WAI	1.9	2.1	3	
	Close/Init/Open	4.2	4.7	5.2	
34921A	Open or Close	4.7	5	5.3	
	Read?	2.9	3. 3	4.7	
	Close/Read/Open	14	15	15	
	Init/*WAI	1.9	2.1	3	
	Close/Init/Open	12.4	14	14	
34934A	Close	1.8	2.2	3.1	
	Read?	2.8	3.1	4.8	
	Open	1.5	1.8	3.2	

[1] Readings were made with minimum NPLC, delay 0, display off, autozero off

[2] All times include the issue of “READ?” and the retrieval of data

[3] CLOSE or OPEN bus transfer times allowed to overlap previous command; command parse times overlap current activity until IO latency dominant

34934A Multi-channel close speeds over GPIB (msec)

	Isolate or fixed mode	Auto 100 mode	Auto 0 mode
Close 2 channels	0.97	1.22	1.31
Close 5 channels	0.43	0.54	0.56
Close 10 channels	0.22	0.28	0.29
Close 60 channels	0.13	0.17	0.21

Single channel measurement rates–DMM reading rates [1] [2]

Function	Resolution	Rds/s
DCV	4½ digits (0.02 plc)	3000
	5 ½ digits (1 plc)	59
	6½ digits (10 plc)	6
2-wire resistance	4½ digits (0.02 plc)	2000
	5½ digits (1 plc)	58
	6 ½ digits (10 plc)	6
Thermocouple	(0.02 plc)	2000
	0.1°C (1 plc)	59
RTD/Thermistor	1°C (0.02 plc)	1900
	0.1°C (1 plc)	58
	0.01°C (10 plc)	6
ACV	6½ fast (200 Hz)	350
	6½ Med (20 Hz)	350
	6 ½ slow (3 Hz)	300
Frequency, period	4½ digits (10 ms)	70
	5½ digits (100 ms)	9
	6½ digits (1 s gate)	1

[1] Reading speeds for 60Hz; autozero OFF

[2] For fixed function and range, readings to memory, scaling and alarms off, autozero OFF

Scanning measurement rates to bus or memory

	Direct measurements – direct to I/O (includes switch, measure time and I/O time)			Measurement into memory
Scanning channels [1]	GPIB ch/sec	USB 2.0 ch/sec	LAN (w/ VXI 11) ch/sec	Into memory ch/sec
Scanning DCV or 2-wire ohms				
34925A	920	860	980	1000
34923A/24A	588	572	605	625
34921A/22A	109	109	109	109
Scanning ACV [2]				
34925A	318	315	323	318
34923A/24A	260	260	260	260
34921A/22A	88	88	88	88
Scanning temperature				
34921A	109	109	109	109
Scanning digital in				
34950A	660	592	815	1038

[1] Speeds are for 4 1/2 digits, delay 0, display off, autozero off and scanning is within bank on the same module; add 10ms for between banks or modules for 2-wire measurements; 4-wire measurements are slower

[2] Add additional time for filter setting on ACV

Data out of memory to LAN, USB, or GPIB (data transfer rate with 1000 channel blocks)

	GPIB rds/sec	USB 2.0 rds/sec	LAN (w/ VXI 11) [1] rds/sec
Readings	2560	2400	3542
readings with timestamp	1304	1230	1826
readings with all format options ON	980	926	1361

[1] LAN large block throughput rate is increased by approximately 30% using LAN sockets

Measurement characteristics with optional internal DMM

DC voltage	
Measurement method	Continuously integrating multi-slope III A-D converter
A-D linearity	0.0002% of reading + 0.0001% of range on 10 V range
Input resistance 100 mV, 1 V, 10 V ranges 100 V, 300 V ranges	 Selectable 10 M Ω or > 10,000 M Ω 10 M Ω ± 1%
Input bias current	< 50 pA at 25°C
Input protection	300 V all ranges
True RMS AC voltage	
Measurement method	AC coupled True RMS—measures the AC component of the input with up to 300 VDC of bias on any range
Crest factor	Maximum of 5:1 at full scale
Additional crest factor errors (non-sinewave)	 Crest factor 1-2 0.05% of reading Crest factor 2-3 0.15% of reading Crest factor 3-4 0.30% of reading Crest factor 4-5 0.40% of reading
AC Filter Bandwidth: Slow Medium Fast	 3 Hz - 300 kHz 20 Hz - 300 kHz 200 Hz - 300 kHz
Input impedance	1 M Ω ± 2% in parallel with 150 pF
Input protection	300 Vrms all ranges
Resistance	
Measurement method	Selectable 4-wire or 2-wire ohms
Current source	referenced to LO input
Offset compensation	Selectable on 100 Ω, 1k Ω, 10k Ω ranges
Maximum lead resistance	10% of range per lead for 100 Ω and 1k Ω ranges. 1k Ω on all other ranges
Input protection	300 V on all ranges
Frequency and period	
Measurement method	Reciprocal counting technique
Voltage ranges	Same as AC voltage function
Gate time	1 s, 100 ms, or 10 ms
Measurement timeout	Selectable 3 Hz, 20 Hz, 200 Hz LF limit

Measurement Consideration (Frequency and Period)
All frequency counters are susceptible to error when measuring low-voltage, low-frequency signals. Shielding inputs from external noise pickup is critical for minimizing measurement errors.

DC current	
Shunt resistance	5 Ω for 10 mA, 100 mA; 0.1 Ω for 1 A
Input protection	1A 250 V fuse on 34921A module
True RMS AC current	
Measurement method	Direct coupled to the fuse and shunt. AC coupled True RMS measurement (measures the ac component only)
Shunt resistance	5 Ω for 10 mA; 0.1 Ω for 100 mA, 1 A
Input protection	1A 250 V fuse on 34921A module
Thermocouple	
Conversion	ITS-90 software compensation
Reference junction type	Internal, fixed, or external
Open thermocouple check	Selectable per channel. Open > 5 k Ω
Thermistor	44004, 44007, 44006 series
RTD	a = 0.00385 (DIN) and a = 0.00392
Measurement noise rejection 60 (50) Hz [1]	
DC CMRR	140 dB
AC CMRR	70 dB
Integration time Normal mode rejection [2]	
200 plc/3.33 s (4 s)	105 dB [3]
100 plc/1.67 s (2 s)	100 dB [3]
20 plc/333 ms (400 ms)	95 dB [3]
10 plc/167 ms (200 ms)	90 dB [3]
2 plc/33.3 ms (40 ms)	85 dB
1 plc/16.7 ms (20 ms)	60 dB
< 1 plc	0 dB

[1] For 1 KΩ unbalance in LO lead
[2] For power line frequency ± 0.08%
[3] For power line frequency ± 1% use 75 dB or ± 2.5% use 60 dB

Measurement characteristics with optional internal DMM (continued)

DC operating characteristics [4]

Function	Digits [5]	Readings/s	Additional RMS noise error
DCV [7], DCI, and Resistance (≤10 kΩ)	6½	0.6 (0.5)	0% of range
	6½	6 (5)	0% of range
	5½	60 (50)	0.001% of range
	5½	300	0.001% of range [6]
	4½	600	0.01% of range [6]
	4½	3000	0.1% of range [6]

Autozero OFF operation

Following instrument warm-up at calibration temerature ±1°C and <10 minutes, add 0.0002% range additional error +5 µV. (For 300 VDC, instead of .0002% of range, need .00066% of range)

Settling considerations

Reading settling times are affected by source impedance, low dielectric absorption characteristics, and input signal changes.

AC operating characteristics [8]

Function	Digits [9]	Readings/s	AC filter
ACV, ACI:	6½	7 sec/reading	Slow (3 Hz)
	6½	1	Medium (20 Hz)
	6½	8 [10]	Fast (200 Hz)
	6½	100 [11]	Fast (200 Hz)

[4] Reading speeds for 60 Hz and (50 Hz) operation; autozero OFF

[5] 6½ digits = 22 bits; 5½2 digits = 18 bits; 4½ digits = 15 bits

[6] Add 20 µV for DCV, 4 µA for DCI, or 20 mΩ for resistance

[7] For 300 VDC, multiply the additional noise error by 3.3

[8] Maximum reading rates for 0.01% of AC step additional error; additonal settling delay required when input DC level varies

[9] 6½ digits = 22 bits; 5½ digits = 18 bits; 4½ digits = 15 bits

[10] For external trigger or remote operation using default settling delay (Delay Auto)

[11] Maximum limit with default settling delays defeated

System specifications

Scanning inputs	
Analog:	34921A, 34922A, 34923A, 34924A, and 34925A multiplexer channels
Digital:	34950A/52A digital in and totalize
Scan triggering	
Source	Interval, external, button press, software, or on monitor channel alarm
Scan count	1 to 50,000 or continuous
Scan interval	0 to 99 hours; 1ms step size
Channel delay	0 to 60 seconds per channel; 1 ms step size
External trig delay	< 2 ms. With monitor on < 200 ms
External trig jitter	< 2 ms
Alarms	
Analog inputs	Hi, Lo, or Hi + Lo evaluated each scan
Digital inputs	34950A/52A digital in maskable pattern match or state change
	34950A/52A frequency and totalize: Hi limit only
Monitor channel	Alarm evaluated each reading
Alarm outputs	4 TTL compatible Selectable TTL logic Hi or Lo on fail
Latency	5 ms (typical)
Memory	
Type	Volatile
Readings	500,000 with timestamp, readable during scan
States	5 instrument states with user label
Alarm queue	Up to 20 events with channel number, reading, and timestamp
System features	
Per-channel math Min/max/average time	Individual Mx+B scaling and calculated real
Power fail recovery	Save switch states
Relay maintenance	Counts each relay closure and stores on module User resettable
Real-time clock	Battery-backed, 20-year typical life

General specifications	
Power supply	Universal 100 V to 240 V ± 10%
Power line frequency	50 – 60 Hz ± 10% automatically sensed
Power consumption	150 VA
Operating environment	Full accuracy for 0 °C to 55 °C Full accuracy to 80% R.H. at 40 °C IEC 60664-1 pollution degree 1
Storage environment	–40°C to 70°C [1]
Mainframe dimensions	133 H x 426 W x 341 D mm (5.25" x 16.8" x 14") Full rack, 3 units high
Mainframe weight	8.8 kg (19.6 lbs)
Module dimensions	280 H x 170 W x 27 D mm (11" x 6.7" x 1")
Module weights	0.73 to 1.18 kg (1.6 to 2.6 lbs)
Terminal block dimensions	28 H x 170 W x 114 D mm (1.1" x 6.7" x 4.5")
Terminal block weights	0.27 to 0.36 kg (0.6 to 0.8 lbs)
Safety conforms to	CSA, UL/IEC/EN 61010-1
EMC conforms to	IEC/EN 61326-1, CISPR 11
Warranty	1 year
Software	
Keysight connectivity software included	
Keysight IO Libraries Suite 14 or greater (E2094)	
Minimum system requirements (IO libraries and drivers)	
PC hardware	Intel Pentium 100 MHz, 64 Mbyte RAM, 210 Mbyte disk space Display 800 x 600, 256 colors, CD-Rom drive
Operating system [2]	Windows 98 SE/NT/2000/XP
Computer interfaces	Standard LAN 10BaseT/100BaseTx
	Standard USB 2.0
	IEEE 488.2 GPIB
Software driver support for programming languages	
Software drivers:	IVI-C and IVI COM for Windows NT/2000/ XP LabVIEW
Compatible with programming tools and environments:	
	Keysight VEE Pro, Keysight T&M Toolkit (requires Visual Studio.NET) National Instruments Test Stand, Measurement Studio, LabWindows/CVI, LabVIEW, Switch Executive Microsoft Visual Studio.NET, C/C++, Visual Basic 6
Keysight BenchLink data logger software system requirements	
Operating system:	Windows 2000 SP4, XP SP 2
Controller:	Recommend Pentium 4, 800 MHz or greater, Min: Pentium III, 500 MHz
RAM:	Recommend 256 MB or greater, Min 128 MB
Disk Space:	Recommend 200 MB, Min 100 MB
Display:	1024x768 resolution, 256 colors

Keysight BenchLink data logger features	
Configuration	Spreadsheet-like channel configurations page.
	Upload and Download instrument configurations. Computed channels using + - */, dB, dBm, dBV, x2, x and full, ½ , or ¼ bridge strain
Graphical Displays	Real-time and historical data displays Add, delete, size, and configure real time Strip chart with markers and alarm indication, bar and scatter charts, Histogram with statistics, Bar meter, and Data table
Graphical Controls	Sliders, switches, buttons, and LED lights
Alarm / Limit testing	Start/Stop scanning on alarm condition Control 34903A relay state or 34907A digital output on alarm
Data	Real time streamed (saved) to disk Automatically export data and configurations Copy data or graphics to windows clipboard Export your selected data to .CVS, .XML, or TXT formats
Event logging	Automatic entry of alarms and errors

[1] Storage at temperatures above 40 °C will decrease battery life

[2] Load IO Libraries Version M for Windows NT support or version 14.0 for Windows 98 SE support

Definitions for specifications

Specifications describe the warranted performance of calibrated instruments that have been stored for a minimum of 2 hours within the operating temperature range of 0 °C to 50 °C, unless otherwise stated, and after a 45 minute warm-up period. Data represented in this document are specifications unless otherwise noted.

Characteristics describe product performance that is useful in the application of the product, but that is not covered by the product warranty. Characteristics are often referred to as Typical or Nominal values.

- Typical describes characteristic performance, which 80% of instruments will meet when operated over a 20 °C to 30 °C temperature range. Typical performance is not warranted.
- Nominal describes representative performance that is useful in the application of the product when operated over a 20 °C to 30 °C temperature range. Nominal performance is not warranted.

NOTE: All graphs contain measured data from several units at room temperature unless otherwise noted.

Ordering Instructions

Mainframe – holds up to 8 plug-in modules			
34980A	Multifunction switch/measure mainframe	Comes standard with "DMM" option, BenchLink Data Logger Software, User Guide on CD-ROM, Power cord and quickstart package.	
34832A	BenchLink Data Logger Pro Software	Optional software package that adds limit checking and decision making for more complex applications.	
	Description	**Module connectors**	**Optional terminal blocks, cables, connector kits**
Multiplexer modules			
34921A	40-channel armature multiplexer w/low thermal offset (order 34921T for temp reference)	2 – 50-pin Dsub, Male	3492xT Terminal block with screw connectors Y1135A – 1.5 m 50-pin M/F Dsub cable Y1136A – 3 m 50-pin M/F Dsub cable Y1139A – 50-pin female solder cup connector kit
34923A	40/80-channel reed multiplexer		
34925A	40/80-channel optically isolated FET multiplexer		
34922A	70-channel armature multiplexer	2 – 78-pin Dsub, Male	3492xT Terminal block, option 001 for solder connections, option 002 for screw connectors Y1137A – 1.5 m 78-pin M/F Dsub cable Y1138A – 3 m 78-pin M/F Dsub cable Y1140A – 78-pin female solder cup connector kit
34924A	70-channel reed multiplexer		
Matrix modules			
34931A	Dual 4x8 armature matrix	2 – 50-pin Dsub, Male	3493xT Terminal block with screw connectors Y1135A – 1.5 m 50-pin M/F Dsub cable Y1136A – 3 m 50-pin M/F Dsub cable Y1139A – 50-pin female solder cup connector kit
34932A	Dual 4x16 armature matrix		
34933A	Dual/quad 4x8 reed matrix		
34934A	Quad 4x32 reed matrix	2-78-pin Dsub, Male	34934T Terminal block with screw connectors OR 34934C Configuration block Y1134A – Row expansion cables for 34934C and 34934T Y1137A – 1.5 m 78-pin M/F Dsub cable Y1138A – 3 m 78-pin M/F Dsub cable Y1140A – 78-pin female solder cup connector kit
General purpose/actuator modules			
34937A	32-channel Form C/Form A general-purpose switch	2 – 50-pin Dsub, Male	3493xT Terminal block with screw connectors Y1135A – 1.5 m 50-pin M/F Dsub cable Y1136A – 3 m 50-pin M/F Dsub cable Y1139A – 50-pin female solder cup connector kit
34938A	20-channel 5-amp Form A switch		
34939A	64-channel Form A Switch	2 - 78-pin Dusb, Male	34939T Terminal block with screw connectors Y1137A – 1.5 m 78-pin M/F Dsub cable Y1138A – 3 m 78-pin M/F Dsub cable Y1140A – 78-pin female solder cup connector kit

Ordering Instructions (continued)

RF and microwave modules			
34941A	Quad 1x4 50-ohm 3-GHz RF multiplexer	20 – SMA	Requires standard 50 ohm SMA RF cables, and optional 8710-2576 SMA Extender wrench for connecting SMA connectors
34942A	Quad 1x4 75-ohm 1.5 GHz RF multiplexer	20 – Mini SMB	Requires mini 75 ohm SMB RF cables, adapters
34945A	Microwave switch/attenuator driver	N/A	Requires 34945EXT and optional Y1150A-Y1155A distribution boards (one 34945EXT is automatically included in each 34945A order)
34946A	Dual 1x2 SPDT terminated microwave switch Option 001: No switches installed Option 004: 4 GHZ switches installed Option 020: 20 GHz switches installed Option 026: 26.5 GHz switches installed	6 SMA	Requires standard 50 ohm SMA cables and adapters 8710-2576 SMA Extender for connecting SMA connectors Option 001 supports qty 2 of any of the following switches: N1810UL unterminated SPDT N1810TL terminated SPDT N1811TL terminated 4 port transfer N1812UL unterminated 5 port transfer
34947A	Triple 1x2 ww unterminated microwave switch Option 001: No switches installed Option 004: 4 GHZ switches installed Option 020: 20 GHz switches installed Option 026: 26.5 GHz switches installed	9 SMA	Requires standard 50 ohm SMA cables and adapters 8710-2576 SMA Extender for connecting SMA connectors Option 001 supports qty 3 N1810UL unterminated SPDT switches
System measurement and control modules			
34950A	64-bit digital I/O with memory and counter	2 – 78-pin Dsub, Female	3495xT Terminal block with screw connectors Y1137A – 1.5 m 78-pin M/F Dsub cable Y1138A – 3 m 78-pin M/F Dsub cable Y1142A – 78-pin male solder cup connector kit
34951A	4-channel isolated D/A converter with waveform memory (DMM option required for calibration)	1 – 50-pin Dsub, Female	3495xT Terminal block with screw connectors Y1135A – 1.5 m 50-pin M/F Dsub cable Y1136A – 3 m 50-pin M/F Dsub cable Y1141A – 50-pin male solder cup connector kit
34952A	Multifunction module with 32-bit DIO, 2-ch D/A and totalizer		
34959A	Breadboard module	26- & 40-pin internal ribbon cable connectors	Any terminal block can be used assuming 50- or 78-pin Dsub is used

Accessories	
Y1130A	Rackmount kit for 34980A, forward or reverse mount (must order either E3663AC rail kit for forward rack mounting or E3664AC rail kit for reverse rack mounting)
Y1131A	Verification and diagnostic tools for 34980A mainframe and modules (select option for specific module support)
Y1132A	Module extender for 34980A. Extends cable to locate module outside of main-frame 8710-2576 SMA Extender for connecting SMA connectors.
Terminal blocks	used for discrete wiring. Supports 20 AWG wire for <100 connections and 24 AWG for >100 connections.
3492xT	Multiplexer terminal blocks
3493xT	Matrix and GP terminal blocks
3495xT	Measurement and control terminal blocks
Cables [1]	used for direct cable connection to module. some modules require 2 cables
Y1134A	Row expansion cables for 34934C and 34934T
Y1135A	1.5 m 50-pin Dsub, M/F twisted pair with outer shield cable – 300 V
Y1136A	3 m 50-pin Dsub, M/F twisted pair with outer shield cable – 300 V
Y1137A	1.5 m 78-pin Dsub, M/F twisted pair with outer shield cable – 300 V
Y1138A	3 m 78-pin Dsub, M/F twisted pair with outer shield cable – 300 V

Rack kit



Screw terminal block

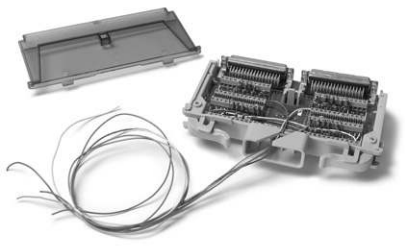

Cables [1]	used for direct cable connection to module. some modules require 2 cables
Y1135A	1.5 m 50-pin Dsub, M/F twisted pair with outer shield cable – 300 V
Y1136A	3 m 50-pin Dsub, M/F twisted pair with outer shield cable – 300 V
Y1137A	1.5 m 78-pin Dsub, M/F twisted pair with outer shield cable – 300 V
Y1138A	3 m 78-pin Dsub, M/F twisted pair with outer shield cable – 300 V
Connector kits [1]	used to build custom cables
Y1139A	Solder cup connector kit for 34921/23/25/31/32/33/37/38 –50-pin Dsub female – 125 V
Y1140A	Solder cup connector kit for 34922, 34924 – 78-pin Dsub female – 60 V
Y1141A	Solder cup connector kit for 34951, 34952 – 50-pin Dsub male – 125 V
Y1142A	Solder cup connector kit for the 34950A – 78-pin Dsub male – 60 V
34945A accessories	distribution boards required for control of external switches. One 34945EXT is required for each 64 coils (included, add more 34945EXTs for additional coils).
34945EXT	External driver for 34945A, one required for each 64 coils –holds 4 distribution boards. Order Y1157A-Y1159A cable kits to connect from distribution boards to switches and attenuators.
Y1150A	34945EXT distribution board for 8 N181x SPDT switches
Y1151A	34945EXT distribution board for two 87104x/106x L7x0xx multiport or 87406B matrix switches
Y1152A	34945EXT distribution board for one 87204x/206x or 87606B switch and two N181x switches
Y1153A	34945EXT distribution board for two 84904/5/6/7/8 or 8494/5/6 step attenuators
Y1154A	34945EXT distribution board for two 87222, L7222C transfer switches and six N181x SPDT switches
Y1155A	34945EXT distribution board w/ generic screw terminals for driving 16 switch coils
Y1157A	9-to-10 pin cable kit for Y1150A, Y1152A, Y1154A - supplies to build 4 cables
Y1158A	10-to-10/10-to-14 pin cable kit for Y1153A, Y1154A - supplies to build 2 cables
Y1159A 1	6-to-16 pin cable kit for Y1150A/51A/52A/53A/54A/55A - supplies to build 2 cables
Thermocouples/thermistors	
34307A	10 pack of J type thermocouples
34308A	5 pack of 10 k thermistors

[1] Module specifications include terminal block; performance may be degraded when using cables or connector kits

High-density screw terminal block



34934A High-density configuration block

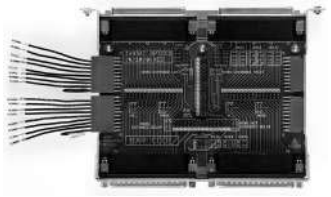

Standard Dsub cable



Connector kit

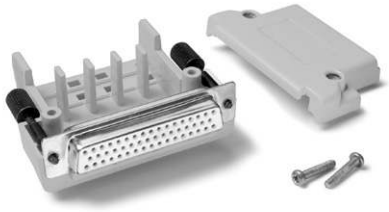

For additional information please visit: **www.keysight.com/find/34980a**

myKeysight

myKeysight

www.keysight.com/find/mykeysight
A personalized view into the information most relevant to you.

www.axiestandard.org
AdvancedTCA® Extensions for Instrumentation and Test (AXIe) is an open standard that extends the AdvancedTCA for general purpose and semiconductor test. Keysight is a founding member of the AXIe consortium. ATCA®, AdvancedTCA®, and the ATCA logo are registered US trademarks of the PCI Industrial Computer Manufacturers Group.

www.lxistandard.org
LAN eXtensions for Instruments puts the power of Ethernet and the Web inside your test systems. Keysight is a founding member of the LXI consortium.

www.pxisa.org
PCI eXtensions for Instrumentation (PXI) modular instrumentation delivers a rugged, PC-based high-performance measurement and automation system.

Three-Year Warranty
www.keysight.com/find/ThreeYearWarranty
Keysight's commitment to superior product quality and lower total cost of ownership. The only test and measurement company with three-year warranty standard on all instruments, worldwide.

Keysight Assurance Plans
www.keysight.com/find/AssurancePlans
Up to five years of protection and no budgetary surprises to ensure your instruments are operating to specification so you can rely on accurate measurements.

www.keysight.com/quality
Keysight Technologies, Inc.
DEKRA Certified ISO 9001:2008
Quality Management System

Keysight Channel Partners
www.keysight.com/find/channelpartners
Get the best of both worlds: Keysight's measurement expertise and product breadth, combined with channel partner convenience.

www.keysight.com/find/modular
www.keysight.com/find/34980a

For more information on Keysight Technologies' products, applications or services, please contact your local Keysight office. The complete list is available at:
www.keysight.com/find/contactus

Americas

Canada	(877) 894 4414
Brazil	55 11 3351 7010
Mexico	001 800 254 2440
United States	(800) 829 4444

Asia Pacific

Australia	1 800 629 485
China	800 810 0189
Hong Kong	800 938 693
India	1 800 112 929
Japan	0120 (421) 345
Korea	080 769 0800
Malaysia	1 800 888 848
Singapore	1 800 375 8100
Taiwan	0800 047 866
Other AP Countries	(65) 6375 8100

Europe & Middle East

Austria	0800 001122
Belgium	0800 58580
Finland	0800 523252
France	0805 980333
Germany	0800 6270999
Ireland	1800 832700
Israel	1 809 343051
Italy	800 599100
Luxembourg	+32 800 58580
Netherlands	0800 0233200
Russia	8800 5009286
Spain	0800 000154
Sweden	0200 882255
Switzerland	0800 805353 Opt. 1 (DE) Opt. 2 (FR) Opt. 3 (IT)
United Kingdom	0800 0260637

For other unlisted countries:
www.keysight.com/find/contactus

(BP-07-10-14)

KEYSIGHT TECHNOLOGIES

This information is subject to change without notice.
© Keysight Technologies, 2013–2014
Published in USA, August 3, 2014
5989-1437EN
www.keysight.com