Alle Rechte vorbehalten/ All rights reserved

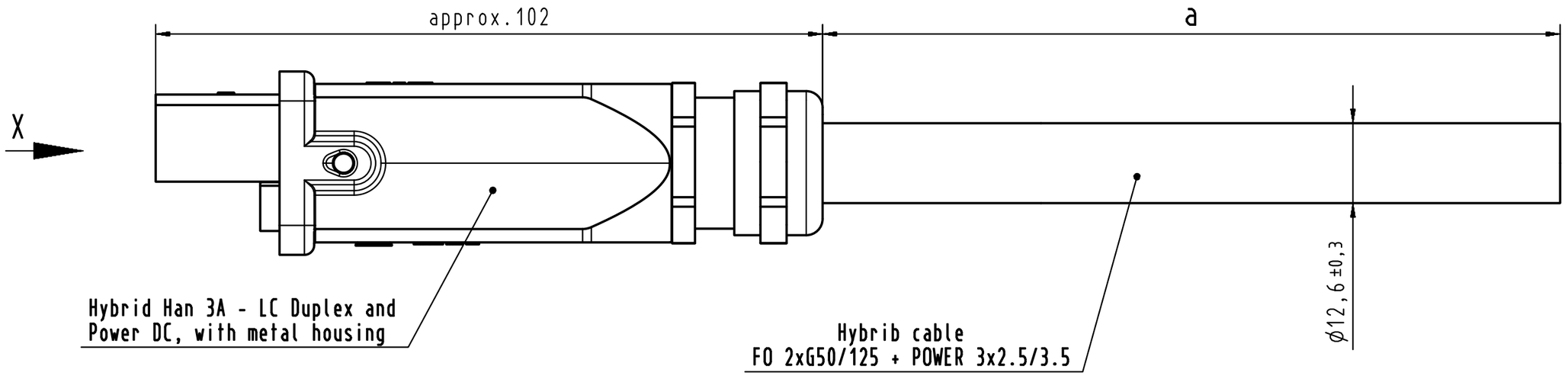

X 2:1
(without FO protection cap)

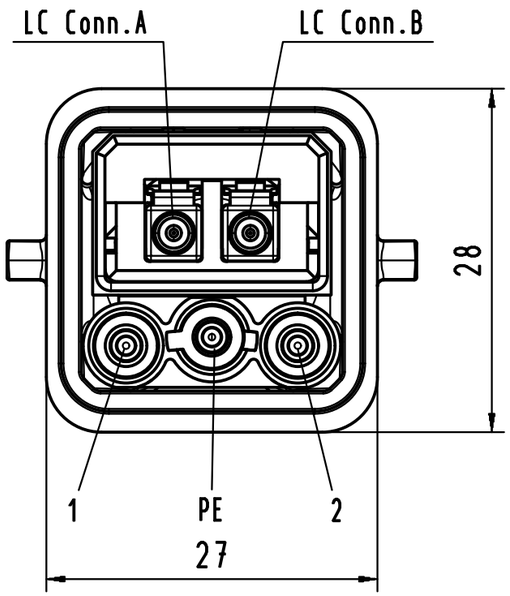

Loading-Plan

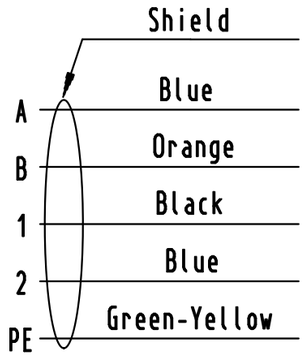

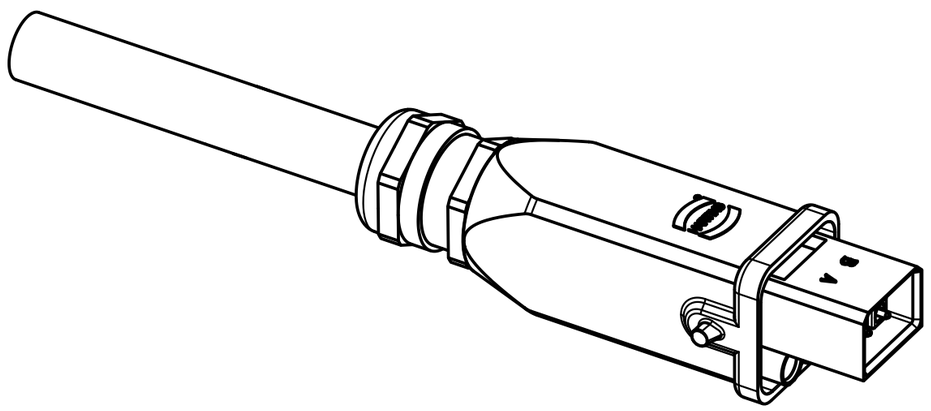

Cont No.	Type of cable	Part-No.	Dim. a
9	Hybrid cable 2xFO + 3x2.5/3.5	33 57 111 300 5002	300 (±3.00)m
8	Hybrid cable 2xFO + 3x2.5/3.5	33 57 111 100 5002	100 (±1.00)m
7	Hybrid cable 2xFO + 3x2.5/3.5	33 57 111 060 5002	60 (±0.60)m
6	Hybrid cable 2xFO + 3x2.5/3.5	33 57 111 050 5002	50 (±0.50)m
5	Hybrid cable 2xFO + 3x2.5/3.5	33 57 111 040 5002	40 (±0.40)m
4	Hybrid cable 2xFO + 3x2.5/3.5	33 57 111 020 5002	20 (±0.20)m
3	Hybrid cable 2xFO + 3x2.5/3.5	33 57 111 010 5002	10 (±0.10)m
2	Hybrid cable 2xFO + 3x2.5/3.5	33 57 111 005 5002	5 (±0.05)m
1	Hybrid cable 2xFO + 3x2.5/3.5	33 57 111 001 5002	1 (±0.01)m

For Information Only
won't be replaced when changed

All Dimensions in mm
Original Size DIN A 3

Techn. Character.

Nicht tolerierte Maße/

	Dat.	Name
Detail.	06.02.09	MR
Insp.	06.02.09	RA
Stand.		

Maßstab/*Scale* /

DRS491A	22.04.09	MR
S468A		
Mod.	Dat.	Name

HARTING Electronics GmbH & Co. KG
D-32339 ESPELKAMP

Hybrid cable assembly, FO 2xG50/125 + POWER 3x2.5mm², 1xHAN3A, LC duplex MM, 3xpower DC

TB 33 57 111 xxx 5002

Sub. Sub

Blatt/ *page*

Mouser Electronics

Authorized Distributor

Click to View Pricing, Inventory, Delivery & Lifecycle Information:

HARTING:
33571110015002 33571110055002 33571110105002 33571110205002 33571110405002 33571110505002 33571111005002