RoHS COMPLIANT

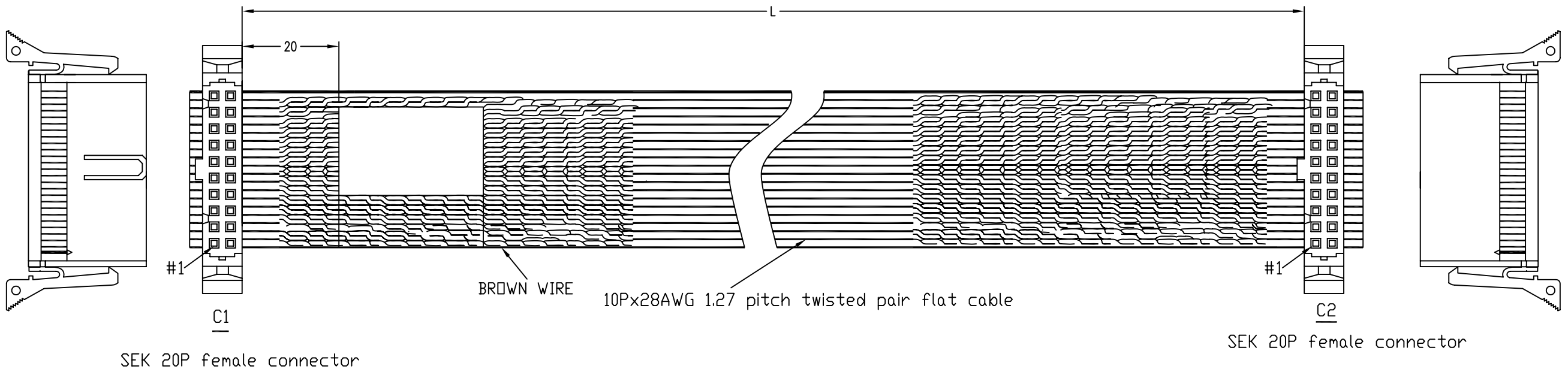

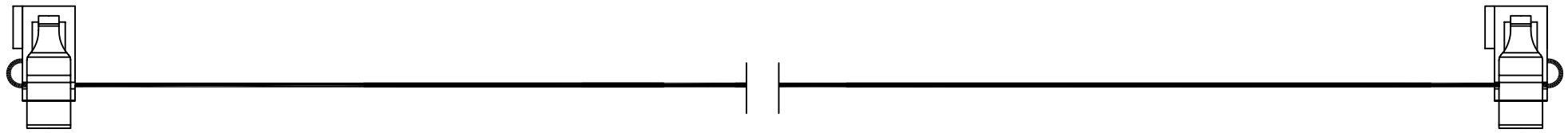

TOLERANCE FOR "L" LENGTH

Part-No.	Length-L
33 18 243 150 0068	1500mm
33 18 243 100 0062	1000mm
33 18 243 050 0060	500mm

NOTES:

1.) CABLE MUST BE PERFORMED 100% CONTINUITY TEST.

2.) WHITE LABEL CONTENT:

CWK/YR-XXXXX-X-XX HARTING P/N

BLACK FONT; FONT HEIGHT: 3.5.

3.) CABLE SHOULD BE FOLDED MANY CIRCLES ACCORDING TO TOTAL CABLE LENGTH AND PACKED BY A PLASTIC BAG (QTY ACCORDING TO ACTUAL CONDITION),STICK THE LABEL WITH P/N,QTY AND LOT NUMBER ON IT,THEN PUT IT INTO THE CARTON (QTY ACCORDING TO ACTUAL CONDITION).

4.) THE CARTON SHOULD BE STICKED THE LABEL WITH P/N AND QTY CONTENT.

All Dimensions in mm Original Size DIN A 3			Techn. Character.				Free size tolerances
				Dat.	Name	Scale	SEK 20P FEMALE DOUBLE END FLAT TWISTED PAIR CABLE ASSY,L=xM
			Detail.	11.08.08	Andrew.H	/	
			Insp.				
			Stand.				
Mod.	Dat.	Name	ZHUHAI HARTING LIMITED			TB 33 18 0003 .00	Page /
						Sub.	