Pomona®

Model 3234
Size B Aluminum Box With Cover
BNC Female Quad

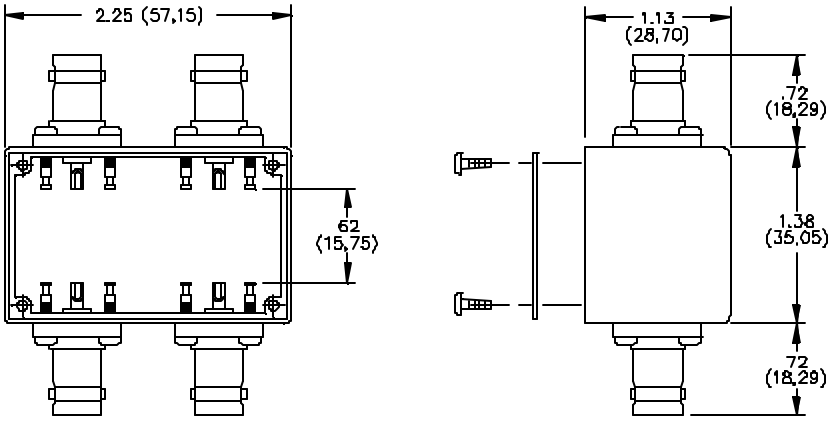

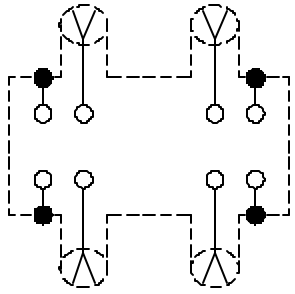

SCHEMATIC

MATERIALS:

Connector: BNC (F)
Body: Tarnish Resistant Plating, Gold Plated Beryllium Copper,
Solder Turret Terminal Screws: Steel
Shielded Housing: Die cast aluminum Alloy A380 or A384.
Finish: Blue paint per Federal Standard 595 #25109 over Phosphoric Etch
Cover: .040 thick aluminum 1100-H14
Finish: Clear anodized
Screws: 4 each #2-32 x 6.35 (¼") Pan Head self-tapping. Steel.

RATINGS:

Connector:
Operating Voltage: Inner Conductor/Shield: 500 VRMS Max.
Operating Temperature: -55ºC to +150ºC
Nominal Impedance: 50 Ohms

ORDERING INFORMATION: Model 3234

All dimensions are in inches. Tolerances (except noted): .xx = ±.02" (,51 mm), .xxx = ± .005" (,127 mm).
All specifications are to the latest revisions. Specifications are subject to change without notice.
Registered trademarks are the property of their respective companies. Made in USA

Sales: 800-490-2361 Fax: 888-403-3360
Technical Assistance: 800-241-2060