Front panels

Front panels, unshielded

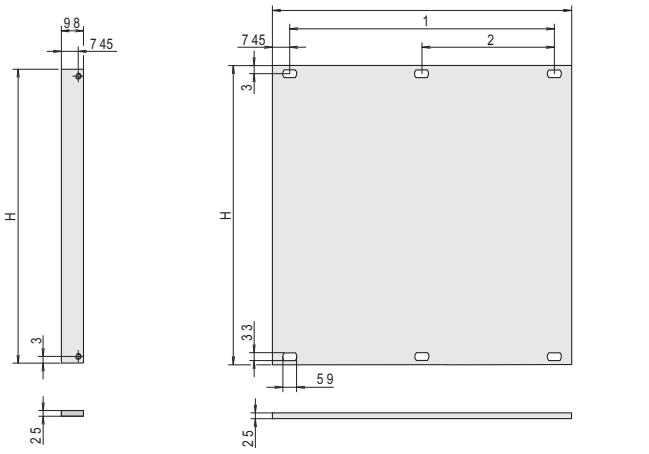

2 HP > 2 HP

- Front panel, Al, 2.5 mm
- Versions:
  - Al, anodised
  - Al, anodised, cut edges plain
  - Al, front anodised, rear iridescent green chromated

Note

- Other sizes and finishes available on request
- Please order fixing material separately, see chapter Assemply parts, page 7.107

Order Information

Height	H	Width	B	b1	b2	Qty 1)	Anodised, cut edges plain	Anodised	Front anodised, rear colorless chromated
U	mm	HP	mm	mm	mm		Part no.	Part no.	Part no.
1	39.5	84	426.4	411.5	203.2	1	–	–	20850-426
2	84.0	84	426.4	411.5	203.2	1	30818-271	30807-416	30847-461
3	128.4	2	9.8	–	–	1 (SPQ 5)[1)]	30810-433	30810-432	30847-470
3	128.4	3	14.9	–	–	1 (SPQ 5)[1)]	30818-272	30807-508	30847-471
3	128.4	4	20.0	–	–	1 (SPQ 5)[1)]	30818-273	30807-481	30838-043
3	128.4	5	25.0	–	–	1 (SPQ 5)[1)]	30818-274	30807-510	30838-044
3	128.4	6	30.1	–	–	1 (SPQ 5)[1)]	30818-275	30807-482	30838-045
3	128.4	7	35.2	–	–	1 (SPQ 5)[1)]	30818-276	30807-509	30838-046
3	128.4	8	40.3	25.4 [2)]	–	1 (SPQ 5)[1)]	30818-277	30807-484	30838-047
3	128.4	10	50.5	35.6	–	1 (SPQ 5)[1)]	30818-279	30807-483	30838-049
3	128.4	12	60.6	45.7	–	1 (SPQ 5)[1)]	30818-281	30807-485	30838-051
3	128.4	14	70.8	55.9	–	1 (SPQ 5)[1)]	30818-282	30807-501	30838-053
3	128.4	21	106.3	91.4	–	1 (SPQ 5)[1)]	30818-289	30807-487	30838-060
3	128.4	28	141.9	127.0	–	1 (SPQ 5)[1)]	30818-296	30807-496	30838-067
3	128.4	42	213.0	198.1	101.6 [2)]	1	30818-310	30807-494	30838-081
3	128.4	63	319.7	304.8	157.5	1	30818-331	30808-067	30838-102
3	128.4	84	426.4	411.5	203.2	1	30818-352	30807-506	30838-123
4	172.9	84	426.4	411.5	203.2	1	30818-434	30807-596	30847-465
6	261.8	2	9.8	–	–	1 (SPQ 5)[1)]	30818-747	30818-741	30847-472
6	261.8	4	20.0	–	–	1 (SPQ 5)[1)]	30818-518	30807-778	30838-124
6	261.8	5	25.0	–	–	1 (SPQ 5)[1)]	30818-519	30807-777	30838-125
6	261.8	6	30.1	–	–	1 (SPQ 5)[1)]	30818-520	30807-752	30838-126
6	261.8	7	35.2	–	–	1 (SPQ 5)[1)]	30818-521	–	30838-127
6	261.8	8	40.3	25.4 [2)]	–	1 (SPQ 5)[1)]	30818-522	30807-779	30838-128
6	261.8	10	50.5	35.6	–	1 (SPQ 5)[1)]	30818-524	30807-753	30838-130
6	261.8	12	60.6	45.7	–	1 (SPQ 5)[1)]	30818-526	30807-755	30838-132
6	261.8	14	70.8	55.9	–	1 (SPQ 5)[1)]	30818-528	30807-758	30838-134
6	261.8	16	80.9	66.0	–	1 (SPQ 5)[1)]	30818-530	30807-780	30838-136
6	261.8	21	106.3	91.4	–	1 (SPQ 5)[1)]	30818-535	30807-757	30838-141
6	261.8	28	141.9	127.0	–	1 (SPQ 5)[1)]	30818-542	30807-766	30838-148
6	261.8	42	213.0	198.1	101.6 [2)]	1	30818-556	30807-764	30838-162
6	261.8	63	319.7	304.8	157.5	1	30818-577	30807-771	30838-183
6	261.8	84	426.4	411.5	203.2	1	30818-598	30807-776	30838-204
9	395.1	84	426.4	411.5	203.2	1	–	–	30847-556

1) SPQ (standard pack quantity): Part number includes 1 piece, but delivery is exclusively made in standard pack quantity (SPQ); please order at least the SPQ quantity or a multiple

2) This dimension is only available for "front anodised, rear iridescent green chromated" version

- Please order fixing material (sleeves, collar screws) separately, see page 7.107