G-6 1/2 Contact Bayonet Base

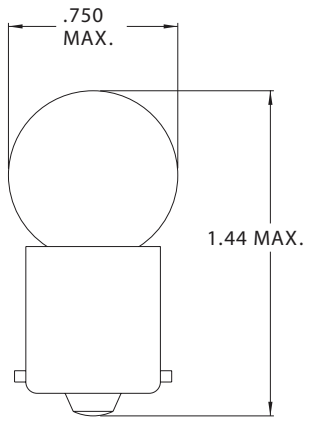

Part Number	Design Voltage	Amps	MSCP	Life Hours	Filament Type
CM81	6.5	1.02	6.0	500	C-2R
CM63	7.0	.63	3.0	1,000	C-2R
CM89	13.0	.58	6.0	750	C-2R
CM98	13.0	.62	6.0	800	C-2V
CM67	13.5	.59	4.0	5,000	C-2R
CM69	13.5	.59	4.0	5,000	C-2F
CM97	13.5	.69	4.0	5,000	C-2V
CM1155	13.5	.59	4.0	5,000	C-2R
CM631	14.0	.63	6.0	1,000	C-2R
CM1247	14.0	.43	3.0	1,000	C-2R
CM71	22.0	.18	3.0	200	C-2V
CM509	24.0	.18	2.6	1,000	C-2V
CM303	28.0	.30	6.0	500	C-2F
CM623	28.0	.37	6.0	1,000	2C-2V
CM1251	28.0	.23	3.0	2,000	2C-2V
CM1223	32.0	.16	3.8	200	C-2V

G-6 1/2 Double Contact Bayonet Base

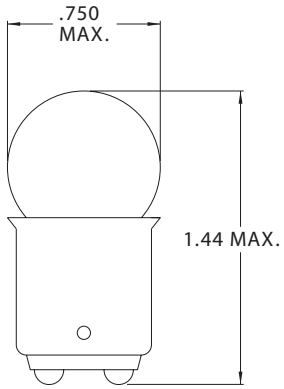

Part Number	Design Voltage	Amps	MSCP	Life Hours	Filament Type
CM82	6.5	1.02	6.0	500	C-2R
CM83	6.5	1.15	6.0	1,200	C-2R
CM1314	6.5	1.02	6.0	500	C-2R
CM64	7.0	.63	3.0	1,000	C-2R
CM90	13.0	.58	6.0	750	C-2R
CM99	13.0	.62	6.0	800	C-2V
CM68	13.5	.59	4.0	5,000	C-2R
CM96	13.5	.69	4.0	5,000	C-2V
CM1178	13.5	.69	4.0	5,000	C-2V
CM632	14.0	.63	6.0	1,000	2C-2R
CM72	22.0	.18	3.0	200	C-2V
CM304	28.0	.30	6.0	500	C-2F
CM624	28.0	.37	6.0	1,000	2C-2V
CM1252	28.0	.23	3.0	2,000	2C-2V
CM1224	32.0	.16	3.8	200	C-2F

CML and Chicago Miniature Lamp are registered trademarks of Visual Communications Company, LLC.