Toggle Switches

Ultra-Minature - Sealed

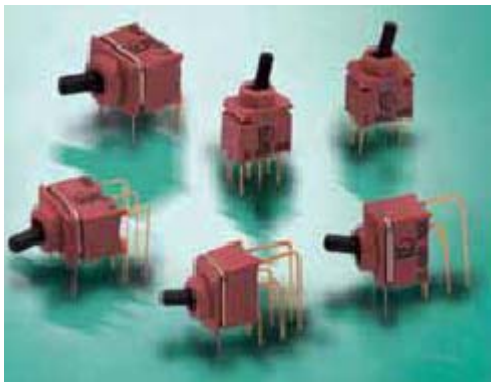

Specifications:

Contact Rating	: 0.4 volt-amps (VA) maximum at 20V AC or DC maximum.
Mechanical Life	: 40,000 make-and-break cycles.
Contact Resistance	: Below 100mΩ typical at 2 to 4V dc, 100mA.
Minimum Insulation Resistance	: 500MΩ.
Dielectric Strength	: 500VRMS at sea level.
Operating Temperature	: -30°C to 85°C.
Materials:	
Actuator	: Glass filled nylon 6/6, heat stabilized, with standard internal o-ring seal.
Housing and base	: Glass filled nylon 66 or 4/6, heat stabilized.
Switch Support	: Brass or steel, tin plated.

Pole Option

M2RE

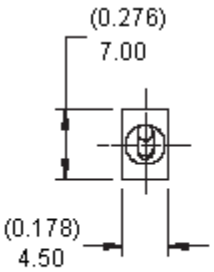

SPDT

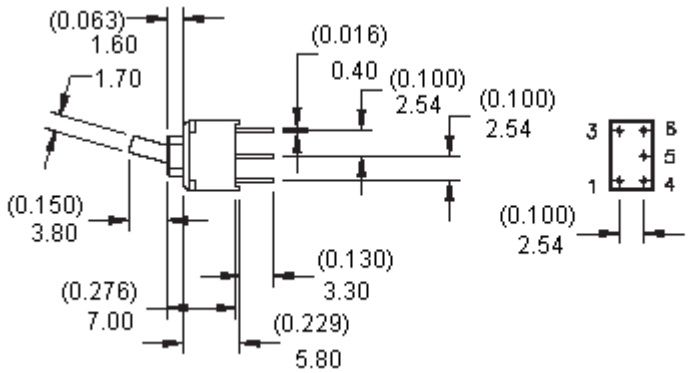

PCB Mounting

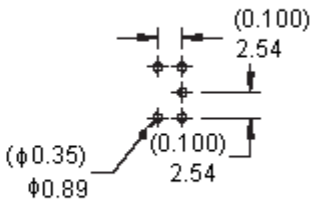

Dimensions : Millimetres (Inches)

Pole Option

M2RE **DPDT**

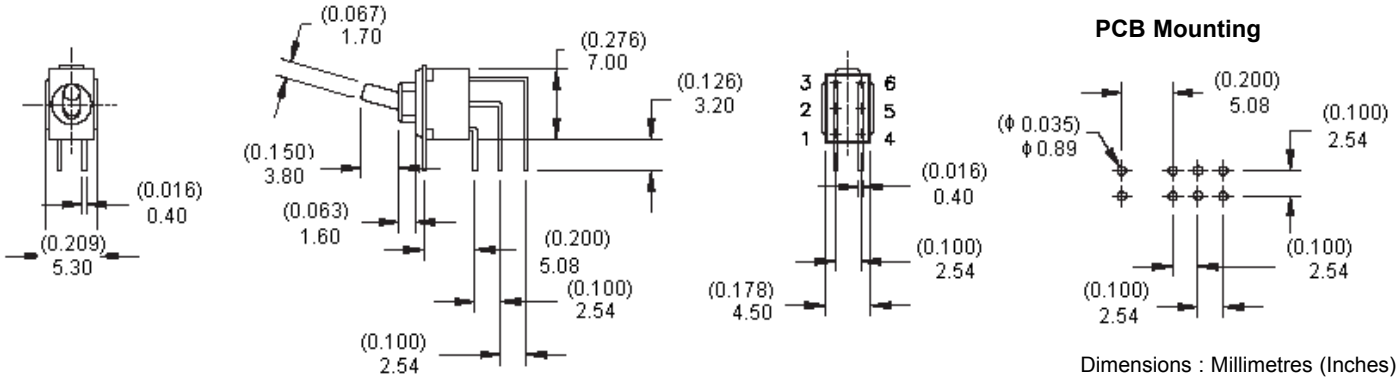

Dimensions : Millimetres (Inches)

M6RE **SPDT**

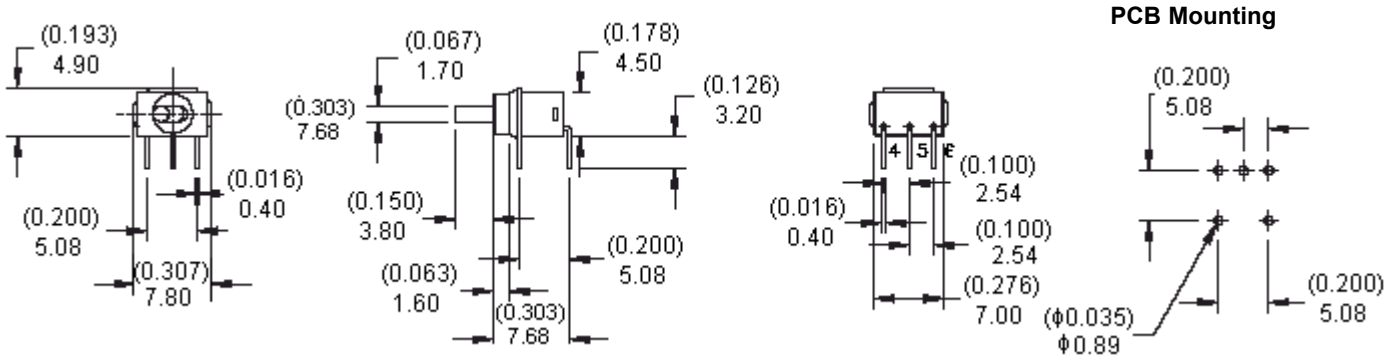

Dimensions : Millimetres (Inches)

M6RE **DPDT**

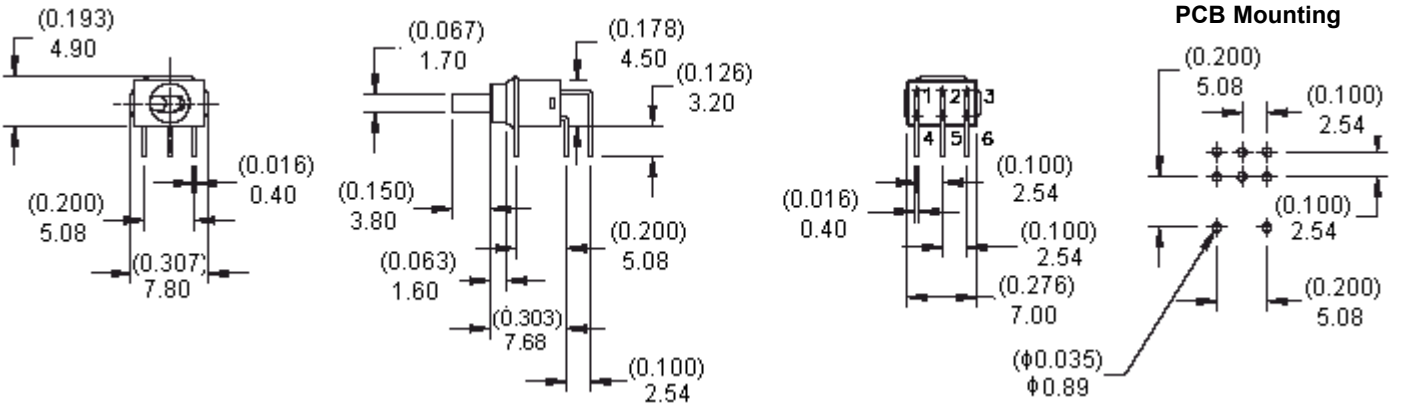

Dimensions : Millimetres (Inches)

Pole Option

M7RE **SPDT**

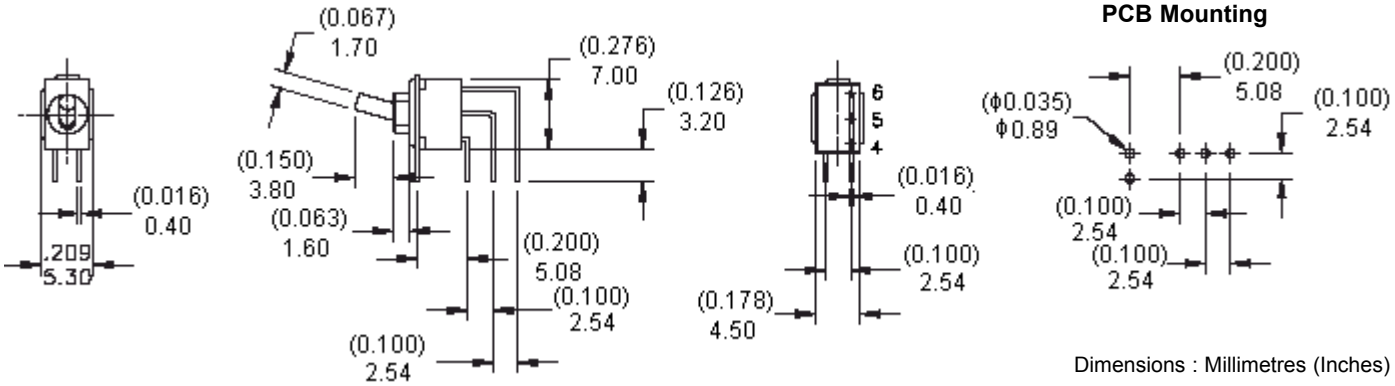

Dimensions : Millimetres (Inches)

M7RE **DPDT**

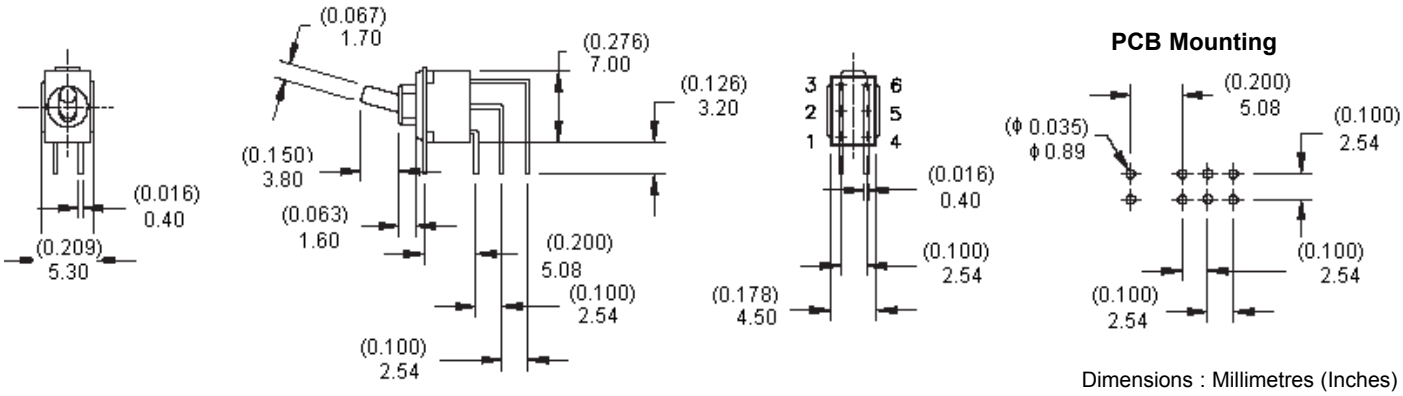

Dimensions : Millimetres (Inches)

Soldering Process:

Manual soldering: Use soldering iron of 30 watts, controlled at 350°C approximately 5 seconds while applying solder.

Wave soldering:

Recommended soldering temperature : 260 ±5°C.
Duration of solder immersion: 5 ±1 seconds (PCB is 1.6mm in thickness).

Soldering: Vapour phase.

Temperature Profile		
Zone	**Room Temperature (°C)**	**Time (seconds)**
Pre-heat (A)	150°C	Minimum 120
Soak (B)	180°C to 200°C	Minimum 150
Peak (C)	200°C to 235°C	Minimum 30
Peak (D)	235°C to 260°C	Minimum 40
Peak (E)	260°C	Maximum 10

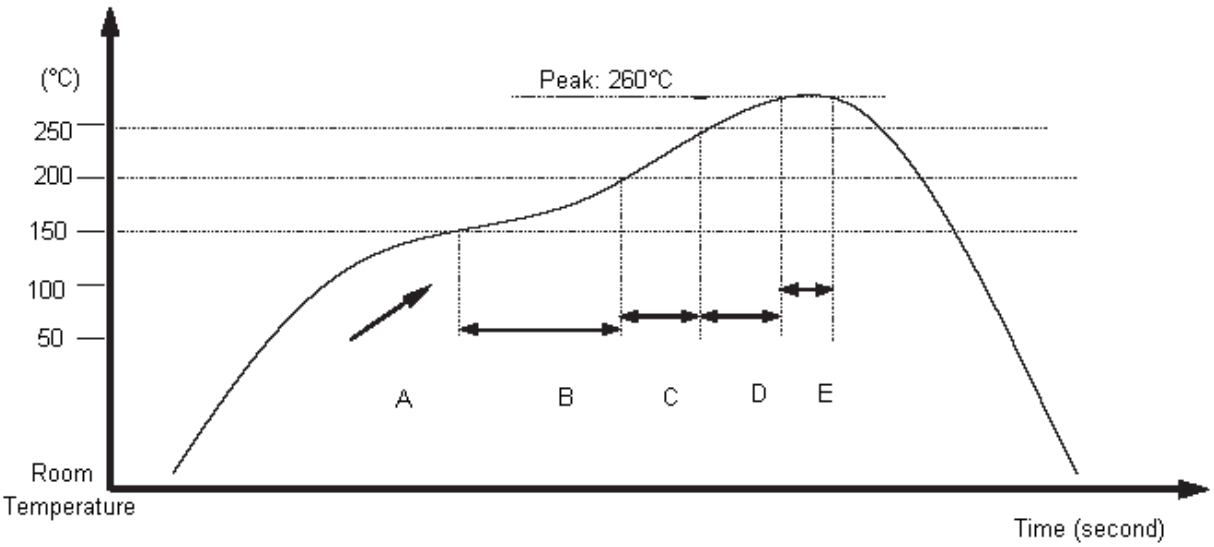

Specifications

Number of Poles	Switch Function			Connected Terminals/Schematic			Model Number
	Position 1	Position 2	Position 3	Position 1	Position 2	Position 3	
							
SP	On	None	On	5 - 6 	N/A	5 - 4 	2US1
			Mom				2US2
		Off	On		Open		2US3
DP	On	None	On	2 - 3, 5 - 6 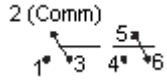	N/A	2 - 1, 5 - 4 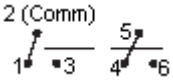	2UD1
			Mom				2UD2
	On	Off	On		Open		2UD3

Mom = Momentary

Specification Table

Description	Part Number
Switch, Ultraminiature, SPDT, On-Mom	2US2T1A1M2RE
Switch, Ultraminiature, SPDT, On-On	2US1T1A1M2RE
Switch, Ultraminiature, SPDT, On-Off-On	2US3T1A1M2RE
Switch, Ultraminiature, DPDT, On-Mom	2UD2T1A1M2RE
Switch, Ultraminiature, DPDT, On-On	2UD1T1A1M2RE
Switch, Ultraminiature, DPDT, On-Off-On	2UD3T1A1M2RE
Switch, Ultraminiature, Horizontal R/A, SPDT, On-Mom	2US2T1A1M6RE
Switch, Ultraminiature, Horizontal R/A, SPDT, On-On	2US1T1A1M6RE
Switch, Ultraminiature, Horizontal R/A, SPDT, On-Off-On	2US3T1A1M6RE
Switch, Ultraminiature, Horizontal R/A, DPDT, On-Mom	2UD2T1A1M6RE
Switch, Ultraminiature, Horizontal R/A, DPDT, On-On	2UD1T1A1M6RE
Switch, Ultraminiature, Horizontal R/A, DPDT, On-Off-On	2UD3T1A1M6RE
Switch, Ultraminiature, Vertical R/A, SPDT, On-Mom	2US2T1A1M7RE
Switch, Ultraminiature, Vertical R/A, SPDT, On-On	2US1T1A1M7RE
Switch, Ultraminiature, Vertical R/A, SPDT, On-Off-On	2US3T1A1M7RE
Switch, Ultraminiature, Vertical R/A, DPDT, On-Mom	2UD2T1A1M7RE
Switch, Ultraminiature, Vertical R/A, DPDT, On-On	2UD1T1A1M7RE
Switch, Ultraminiature, Vertical R/A, DPDT, On-Off-On	2UD3T1A1M7RE

Part Number Explanation:

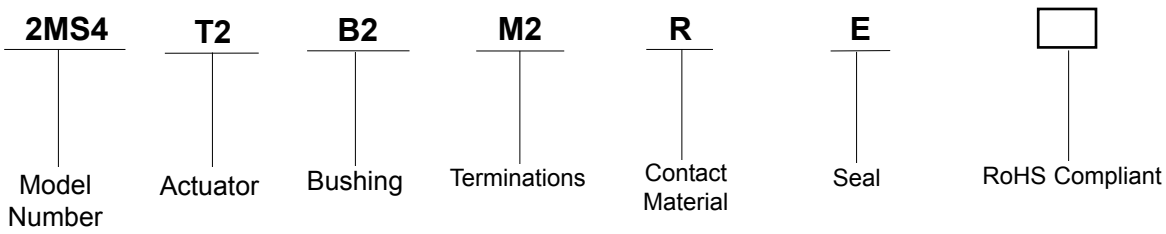

Model Number : 2US1 = SP On-None-On, 2US2 = SP On-None-Mom, 2US3 = SP On-Off-On, 2UD1 = DP On-None-On, 2UD2 = DP On-None-Mom and 2UD3 = DP On-Off-On.
Actuator : T1 = 3.80 High (std).
Bushing : A1 = 1.60 High (std).
Terminations : M2 = PVC Through Hole, M6 = Right Angle, PVC Through Hole and M7 = Vertical Right Angle, PVC Through Hole.
Contact Material : R = Gold.
Seal : E = Epoxy (std).

Notes:

International Sales Offices:



AUSTRALIA – Farnell
Tel No: ++61 1300 361 005
Fax No: ++61 1300 361 225



FINLAND – Farnell
Tel No: ++ 358 9 560 7780
Fax No: ++ 358 9 345 5411



ITALY – Farnell
Tel No: ++ 39 02 93 995 200
Fax No: ++ 39 02 93 995 300



SPAIN – Farnell
Tel No: 901 20 20 80
Fax No: 901 20 20 90



AUSTRIA – Farnell
Tel No: ++ 43 662 2180 680
Fax No: ++ 43 662 2180 670



FRANCE – Farnell
Tel No: ++ 33 474 68 99 99
Fax No: ++ 33 474 68 99 90



MALAYSIA – Farnell-Newark
Tel No: ++ 60 3 7873 8000
Fax No: ++ 60 3 7873 7000



SWEDEN – Farnell
Tel No: ++ 46 8 730 50 00
Fax No: ++ 46 8 83 52 62



BELGIUM – Farnell
Tel No: ++ 32 3 475 2810
Fax No: ++ 32 3 227 3648



GERMANY – Farnell
Tel No: ++ 49 89 61 39 39 39
Fax No: ++ 49 89 613 59 01



NETHERLANDS – Farnell
Tel No: ++ 31 30 241 7373
Fax No: ++ 31 30 241 7333



SWITZERLAND – Farnell
Tel No: ++ 44 204 64 64
Fax No: ++ 44 204 64 54



BRAZIL – Farnell-Newark
Tel No: ++ 55 11 4066 9400
Fax No: ++ 55 11 4066 9410



HONG KONG – Farnell-Newark
Tel No: ++ 852 2268 9888
Fax No: ++ 852 2268 9899



NEW ZEALAND – Farnell
Tel No: 0800 90 80 80
Fax No: 0800 90 80 81



UK – Farnell
Tel No: ++ 44 8701 200 200
Fax No: ++ 44 8701 200 201

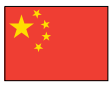

CHINA – Farnell-Newark
Tel No: ++86 10 6238 5152
Fax No: ++86 10 6238 5022



HUNGARY - Farnell
Tel No: ++ 44 870 1200 208
Fax No: ++ 44 870 1200 209



NORWAY – Farnell
Tel No: 800 146 70
Fax No: 800 146 76



UK – CPC
++ 44 8701 202 530
++ 44 8701 202 531

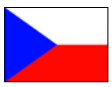

CZECH REPUBLIC - Farnell
Tel No: ++ 44 870 1200 208
Fax No: ++ 44 870 1200 209



INDIA - Farnell
Tel No: ++ 44 870 1200 208
Fax No: ++ 44 870 1200 209



PORTUGAL – Farnell
Tel No: ++ 34 93 475 8804
Fax No: ++ 34 93 474 5288



USA – Newark
Tel No: 800 463 9275



DENMARK – Farnell
Tel No: ++ 45 44 53 66 44
Fax No: ++ 45 44 53 66 06



IRELAND – Farnell
Tel No: ++ 353 1 830 9277
Fax No: ++ 353 1 830 9016



RUSSIA – Farnell
Tel No: ++ 44 870 1200 208
Fax No: ++ 44 870 1200 209



EXPORT – Farnell
Tel No: ++ 44 8701 200 208
Fax No: ++ 44 8701 200 209

For enquiries from all other markets



ESTONIA – Farnell
Tel No: ++ 358 9 560 7780
Fax No: ++ 358 9 345 5411



ISRAEL – Farnell
Tel No: ++ 180 937 0015
Fax No: ++ 180 937 0014



SINGAPORE – Farnell-Newark
Tel No: ++ 65 6788 0200
Fax No: ++ 65 6788 0300

http://www.farnell.com
http://www.newark.com
http://www.cpc.co.uk

Disclaimer This data sheet and its contents (the "Information") belong to the Premier Farnell Group (the "Group") or are licensed to it. No licence is granted for the use of it other than for information purposes in connection with the products to which it relates. No licence of any intellectual property rights is granted. The Information is subject to change without notice and replaces all data sheets previously supplied. The Information supplied is believed to be accurate but the Group assumes no responsibility for its accuracy or completeness, any error in or omission from it or for any use made of it. Users of this data sheet should check for themselves the Information and the suitability of the products for their purpose and not make any assumptions based on information included or omitted. Liability for loss or damage resulting from any reliance on the Information or use of it (including liability resulting from negligence or where the Group was aware of the possibility of such loss or damage arising) is excluded. This will not operate to limit or restrict the Group's liability for death or personal injury resulting from its negligence. SPC Multicomp is the registered trademark of the Group. © Premier Farnell plc 2008.