SERPAC 272 (3D exploded)

Electronic Enclosures

-Click on image to show toolbar. Use ▶ ⏸ to Play/Pause Animation.
-Left click and drag on image to move 3D model.

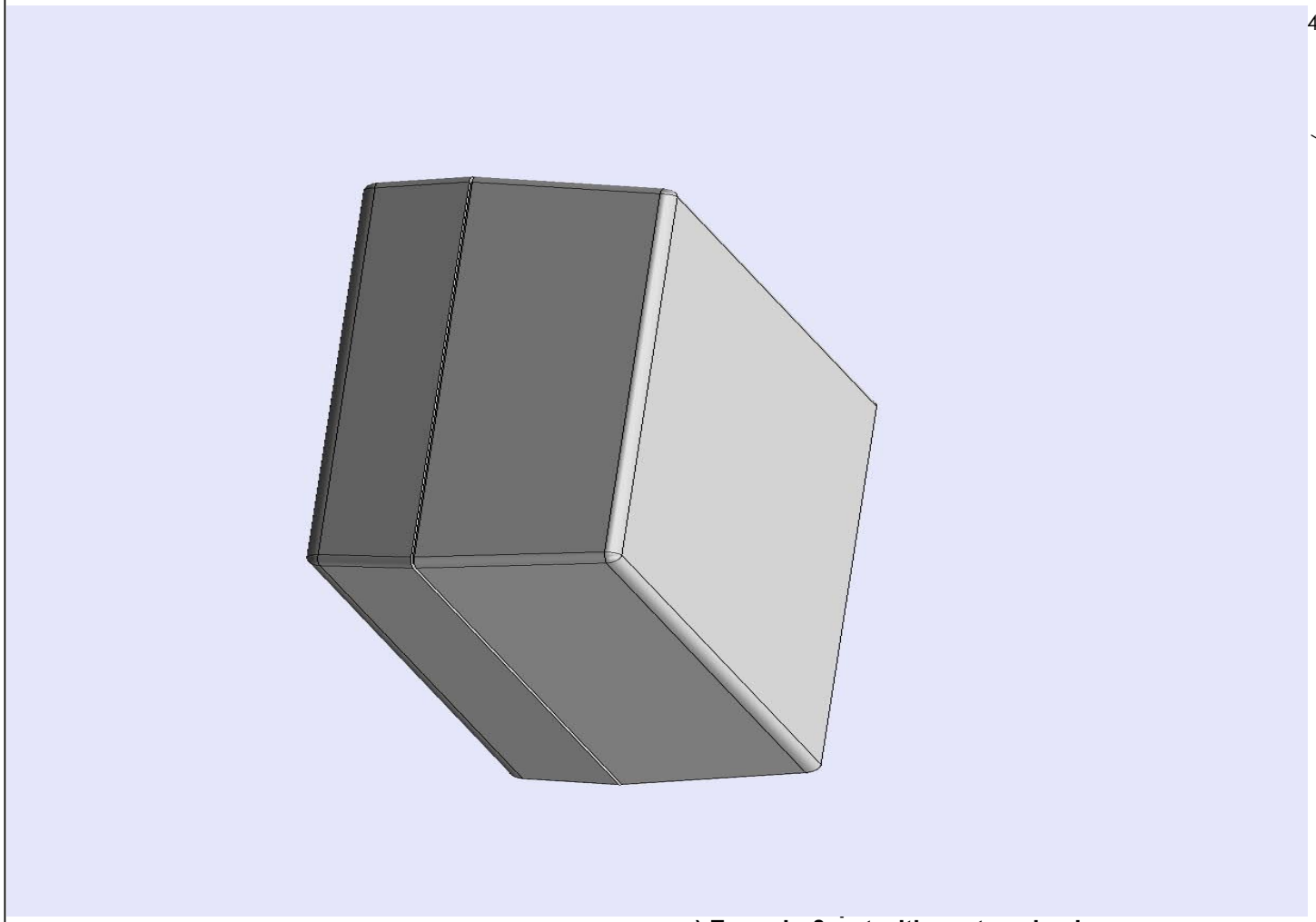

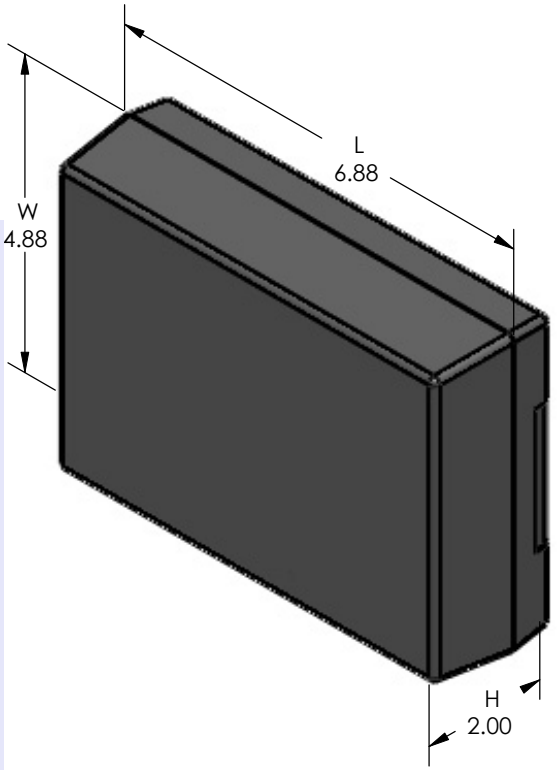

a) Zoom in & out with center wheel.
b) Pause at any moment to view and or print views.
c) Change the views to ortho and section views if needed from the Views pull down menu.
d) Explore options included in the tool bar like: Views, Transparency of model, Lighting type, etc.

PART NO.	DESCRIPTION **(Included)**	ACCSESSORIES **(Optional)**	
7-2	TOP	PART NO.	DESCRIPTION
27	BOTTOM	379	Prototype grid board (bottom)
1025	Battery Cover	479	Prototype clad board (bottom)
6005	#4X3/8" Self tapping (6)	50	Non-skid feet

Notes: (Enclosure weight 0.44 lb / 201 gm)
1) Enclosure meets or exceeds IP40 and NEMA 1
2) Circuit Board drawings can be download at:
Top:
http://www.serpac.com/Accessories/CircuitBoard/drawings/X73_CB.pdf
Bottom:
http://www.serpac.com/Accessories/CircuitBoard/drawings/379-479-cbg.pdf
3) All components are RoHS Compliant.

619 Commercial Ave. Covina, CA 91723
Ph. (626) 331-0517 Fx. (626) 331-8584 serpac.com

SERPAC 272 (user print)

Electronic Enclosures

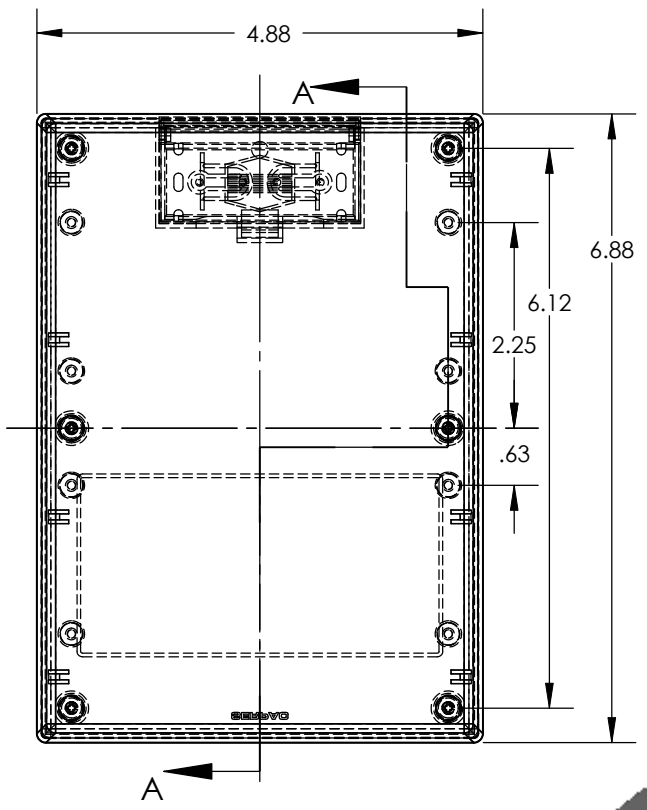

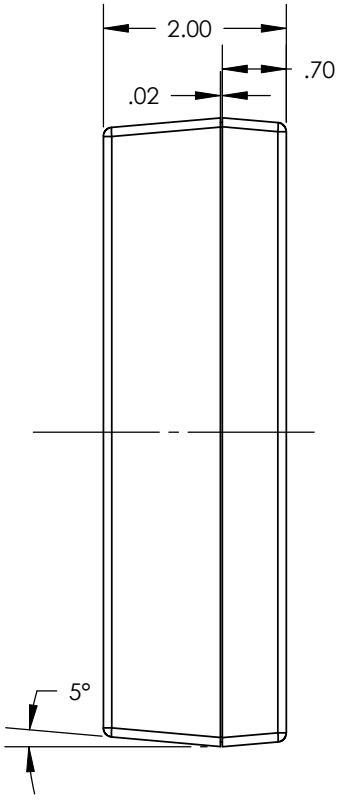

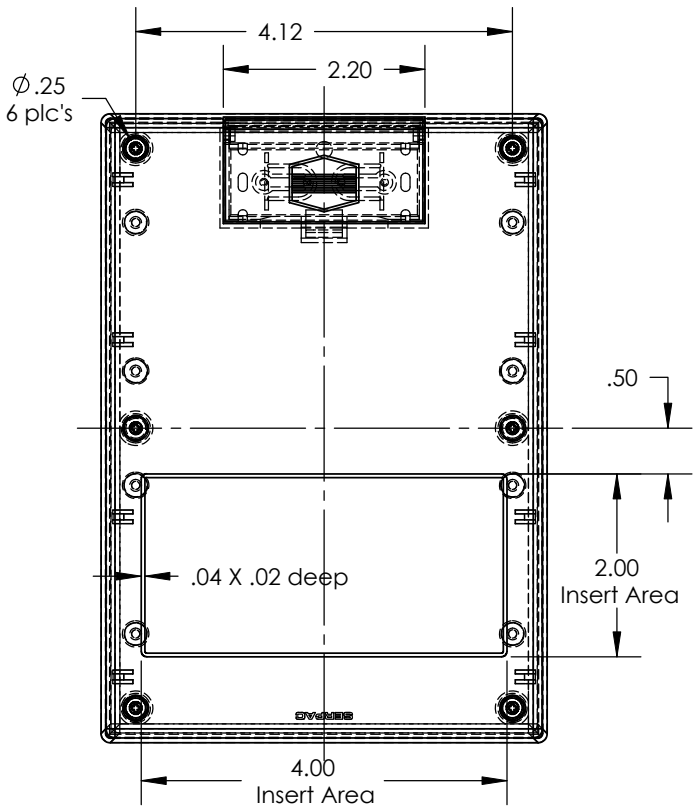

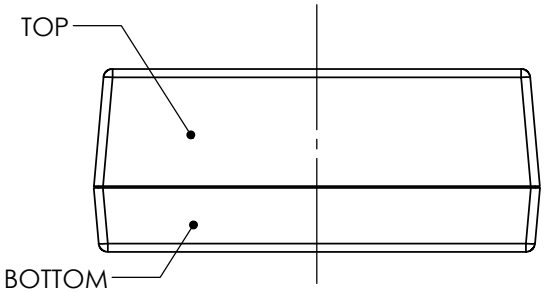

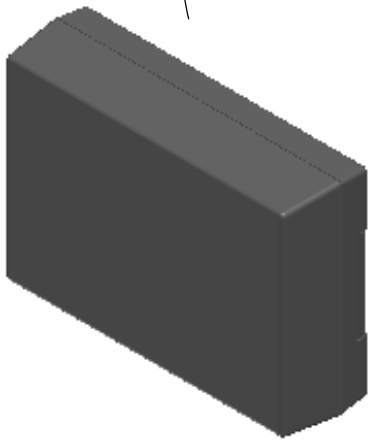

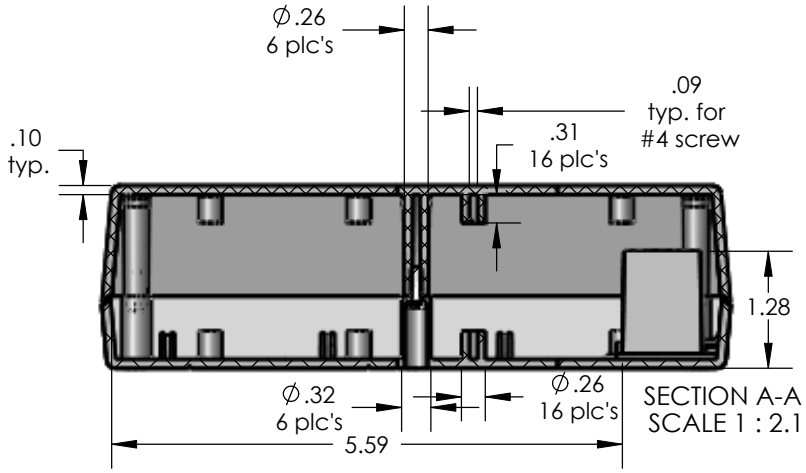

PART NO.	DESCRIPTION (Included)	ACCSESSORIES (Optional)	
7-2	TOP	PART NO.	DESCRIPTION
27	BOTTOM	379	Prototype grid board (bottom)
1025	Battery Cover	479	Prototype clad board (bottom)
6005	#4X3/8" self tapping (4)	50	Non-skid feet

Notes: (Enclosure weight 0.44 lb / 201 gm)
1) Enclosure meets or exceeds IP40 and NEMA 1
2) Circuit Board drawings can be download at:
Top:
http://www.serpac.com/Accessories/CircuitBoard/drawings/X73_CB.pdf
Bottom:
http://www.serpac.com/Accessories/CircuitBoard/drawings/379-479-cbg.pdf
3) All components are RoHS Compliant.

ALL DIMENSIONS ARE ± .010" 4/13/10 (2 of 2)

619 Commercial Ave. Covina, CA 91723
Ph. (626) 331-0517 Fx. (626) 331-8584 www.serpac.com