Accuride®

MODEL 2632

Very Low Profile
Full Extension Slide
Up to 75 lb. [34 kg.] Capacity**

APPLICATIONS: For use in small to medium cabinet, desk, kitchen, and store fixture drawers whenever a full extension, very low profile slide is required. **This product is covered by U.S. (6,254,209) and various foreign patents issued and/or pending.**

2632
QUICK REFERENCE

Side Space: .50" +.030 x 2
Length: 8"–22"
Overall slide dimensions: .50" x 1.62"
Minimum drawer height: 1.78"
Load rating: 75 lb.**

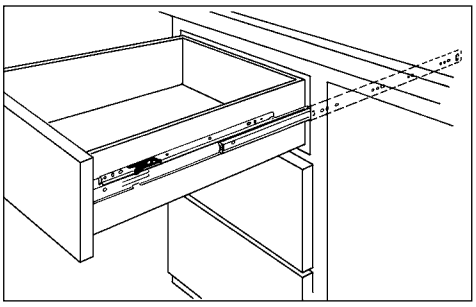

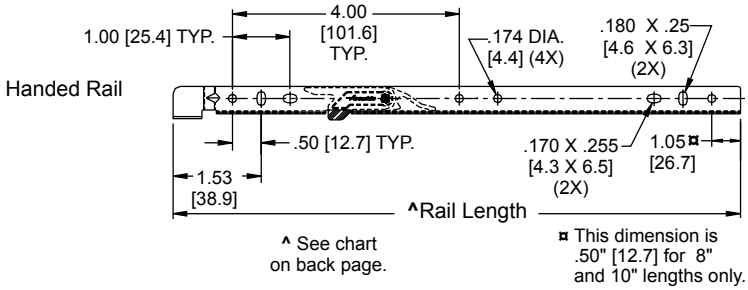

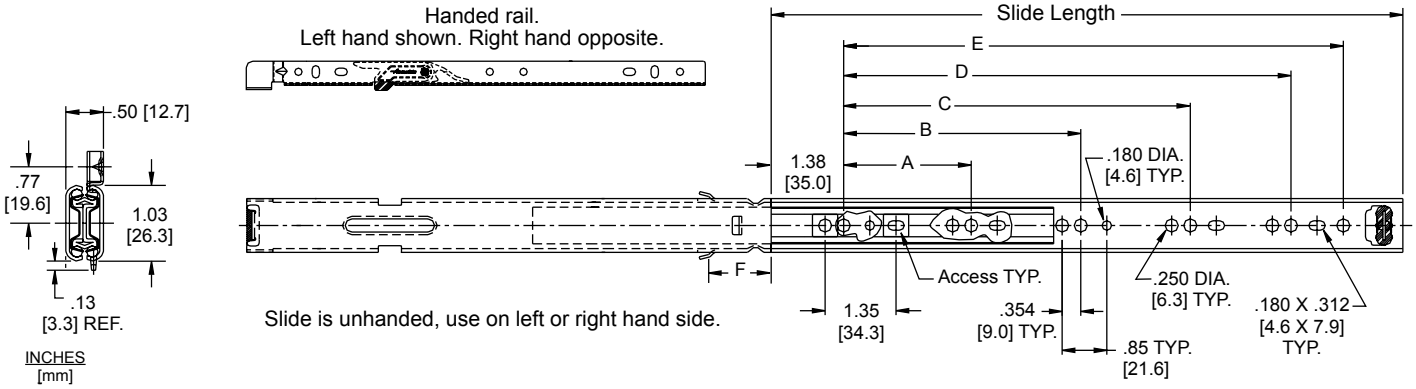

Finishes	Bright electro-zinc (C) and black zinc (CB) plating available
Lengths	Even lengths: 8"–22" [203 mm–559 mm]
Travel	Full extension
Height	1.16" (1.62" including rail) [29.5 mm (41.2 mm including rail)]
Load	Up to 65 lbs. [30 kg.]* KCMA–75 lbs. [34 kg.]**
Side space	.50" +.030 -.000 (1/2" +1/32 -0) [12.7 mm +0.8 -0.0]
Mounting	Side, handed rail
Hardware	#6 truss head screw or M-6 Euro screw or Accuride screw provided in D-pack (part number 2410-3218)
Disconnect	Handed rail lift-off
Ball Bearings	Steel
Features	Silenced positive stops in and out, traditional and 32 mm hole pattern, hold-in detent. Vertical adjustment on drawer and horizontal adjustment in cabinet.

Part Number	Slide Length	Slide Travel	A	B	C	D	E	F
2632-8	8.00 [203]	8.00 [203]	5.04 [128.0]					1.48 [37.6]
2632-10	10.00 [254]	10.00 [254]	5.04 [128.0]					3.48 [88.4]
2632-12	12.00 [305]	12.00 [305]	5.04 [128.0]	8.82 [224.0]				1.38 [35.1]
2632-14	14.00 [356]	14.00 [356]	5.04 [128.0]	8.82 [224.0]				3.38 [85.9]
2632-16	16.00 [407]	16.00 [407]	5.04 [128.0]	8.82 [224.0]	12.60 [320.0]			2.86 [72.6]
2632-18	18.00 [457]	18.00 [457]	5.04 [128.0]	8.82 [224.0]	13.86 [352.0]			4.86 [123.4]
2632-20	20.00 [508]	20.00 [508]	5.04 [128.0]	8.82 [224.0]	16.38 [416.0]			3.08 [78.2]
2632-22	22.00 [559]	22.00 [559]	5.04 [128.0]	8.82 [224.0]	13.86 [352.0]	17.64 [448.1]	18.90 [480.1]	5.08 [129.0]

* 65 lb. load rating based on an 18″ slide on a 16″ wide drawer cycled 50,000 times.
** 75 lb. kitchen load rating based on a 22″ slide on a 16″ wide drawer extended 2/3 travel, cycled 25,000 times.

Installation Instructions

Conventional Mounting

Cabinet Member Installation

1. Mark a horizontal line in the cabinet side wall at least 25/32" up from the cabinet floor to clear the rail hook or at least 1" down from the top of the drawer side to clear the rail. Mark a point on the line 2-11/32" in from the cabinet front. This will position the slide flush with the cabinet opening. For inset drawers, add the drawer front thickness to the 2-11/32" dimension. See Figure 1.

NOTE: To access the additional mounting holes in the cabinet member of the slide, it is necessary to move the intermediate member to line up the access holes and the mounting hole.

2. Measure the distance between the front and rear horizontal slots on the slide. See Figure 1. Mark this measurement on the horizontal line beginning at the first mark.
3. Make a pilot hole on each of these marks, either with an awl or 1/8" drill. Install #6 truss head or special screw (provided in D-Pack) through the front and rear horizontal slots.

Rail Installation

1. Mark a horizontal line on the drawer side 25/32" above the slide centerline. See Figure 2.
2. Mark a point on this line 1-21/32" back from the drawer front.
3. Measure the distance between the front and rear vertical slots on the rail. Mark this distance on the horizontal line beginning at the first mark. Make pilot holes with an awl or 1/8" drill.
4. Install screws in vertical slots and adjust location of drawer. To connect the drawer to the slide member: 1) Close the slide completely; 2) Position the drawer so the rail rests on the drawer member; 3) Push the drawer into the cabinet. At this time, the rail will snap into place securing the rail to the slide; 4) Open the drawer to ensure the latch has engaged properly with the drawer member.
5. After adjusting position of drawer, install screws in the round holes, front and rear of slides and rails. For longer slides, install screws in the central holes of both.

32 mm System Mounting

Cabinet Member Installation

1. Install an M-6 euro screw through the second hole from the front of the slide and into a 6 mm hole located 37 mm in from the front of the cabinet. Select a rear mounting hole on one of the 32 mm multiples provided and install screws. See Figure 3.

Rail Installation

1. Mark a horizontal line on the drawer side 19.6 mm above the slide center line. See Figure 4.
2. Mark a point on this line 44.1 mm back from the drawer front. Complete rail installation by following steps 3 through 5 for conventional rail installation.

Figure 1 Conventional Cabinet Mounting

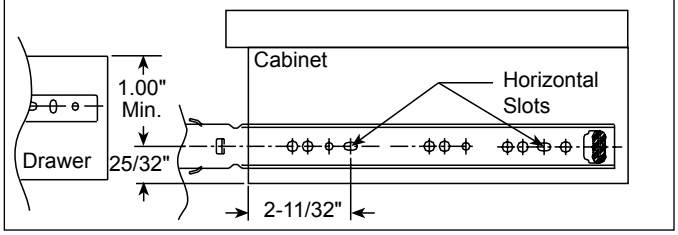

Figure 2 Conventional Drawer Mounting

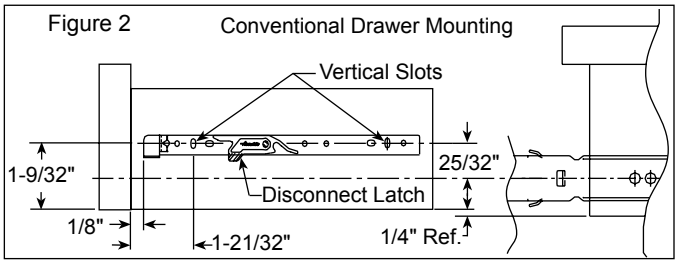

Figure 3 32 mm System Cabinet Mounting

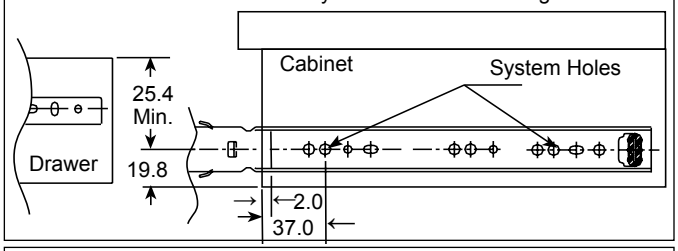

Figure 4 32 mm System Drawer Mounting

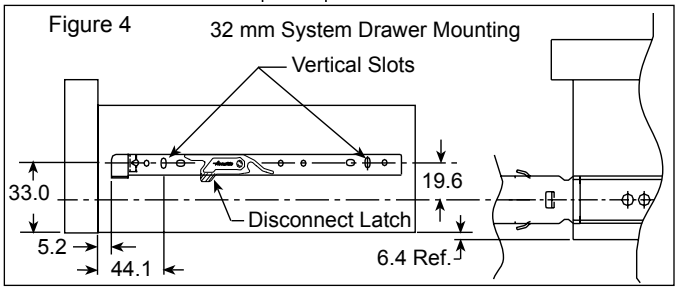

Ordering Instructions

Complete your slide order for Accuride Model 2632 by specifying the following:

100 each	C	2632	-12	D
Total Slides Required				
	Slide Finish			
		Slide Model		
			Slide Length	
				Optional Polybag Packaging

Sample Handed Rail Order–*Bulk Orders Only*

(Order one per pair of slides)	100 each	7455-1922-CL
(Order one per pair of slides)	100 each	7455-1922-CR
	Total Rails Required	
	Rail Part Number	

Slide Length	Rail Part Numbers	Rail Length
8" –10"	7455-0811-CL and 7455-0811-CR	6.50" [165.1 mm]
12"–14"	7455-1215-CL and 7455-1215-CR	10.78" [273.8 mm]
16"–18"	7455-1618-CL and 7455-1618-CR	13.30" [337.8 mm]
20"–22"	7455-1922-CL and 7455-1922-CR	17.08" [433.8 mm]

Packaging

Bulk (P) Pack: All lengths are packaged 10 pair per box. Handed rails and screws are ordered separately but packaged together.

Distributor (D) Pack: All lengths are packaged 10 pair per box. Polybag includes one pair of slides packaged with handed rails and screws.

(X) Pack: All lengths are packaged 10 pair per box. Slides, handed rails, and mounting screws packaged together.

Specifications

Slide members and ball retainers: Cold rolled steel
Ball bearings: Carburized steel
RoHS Compliant

NOTE: Specifications, materials, prices, terms, and delivery are subject to change without notice.

Accuride

ACCURIDE INTERNATIONAL INC.

12311 Shoemaker Avenue
Santa Fe Springs, CA 90670

TEL (562) 903-0200
FAX (562) 903-0208
www.accuride.com

Manufacturing, Engineering, and Sales
United States • Germany • Japan • Mexico • United Kingdom • China

Copyright © 2017 Accuride International Inc. 3700-9060(9312)-MK018-R10-0318