SERPAC 25-S

Electronics Enclosures

NOTES:

1. WHEN MACHINE OR I PLATES MODIFICATIONS ARE REQUIRED, USE THE CENTER OF THE ENCLOSURE TO DIMENSION.

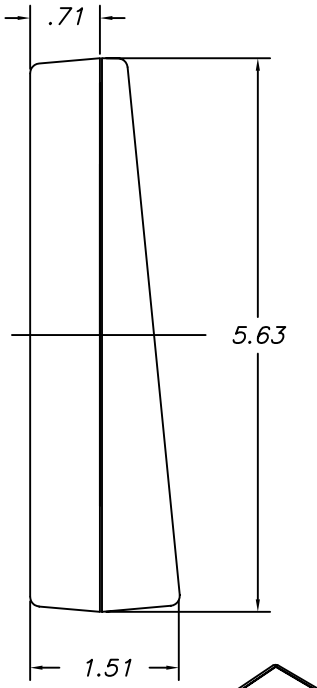

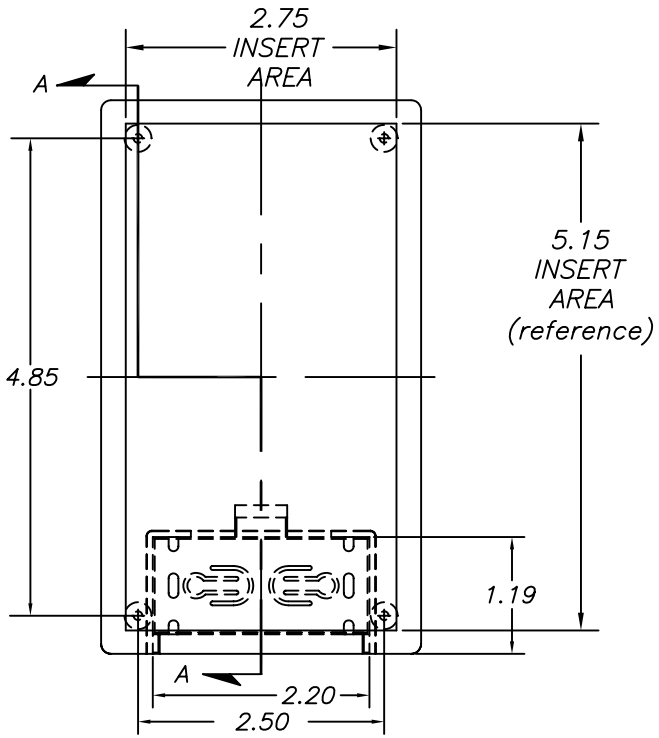

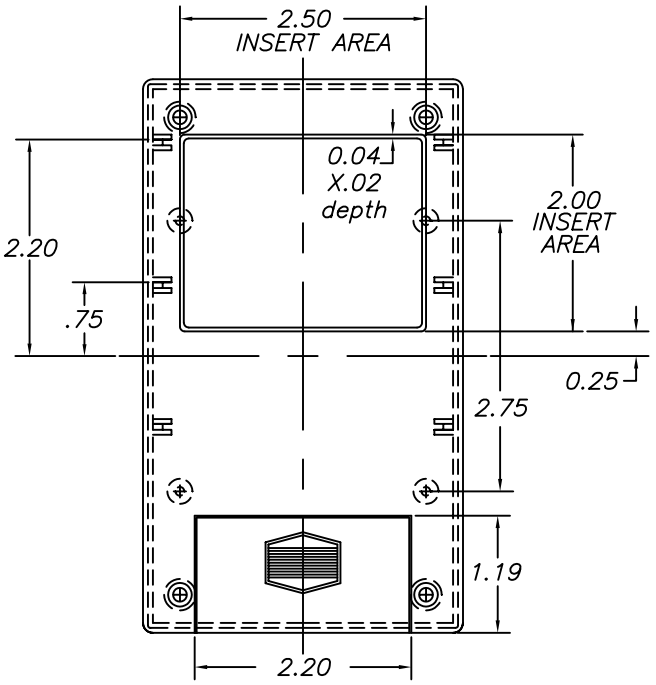

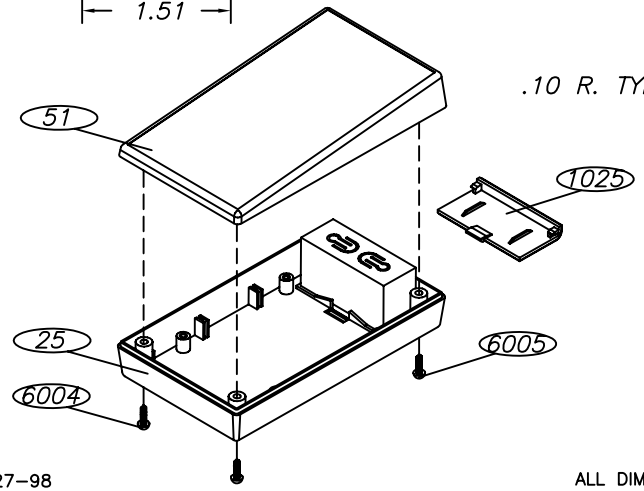

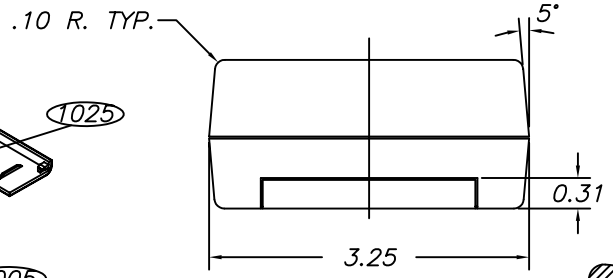

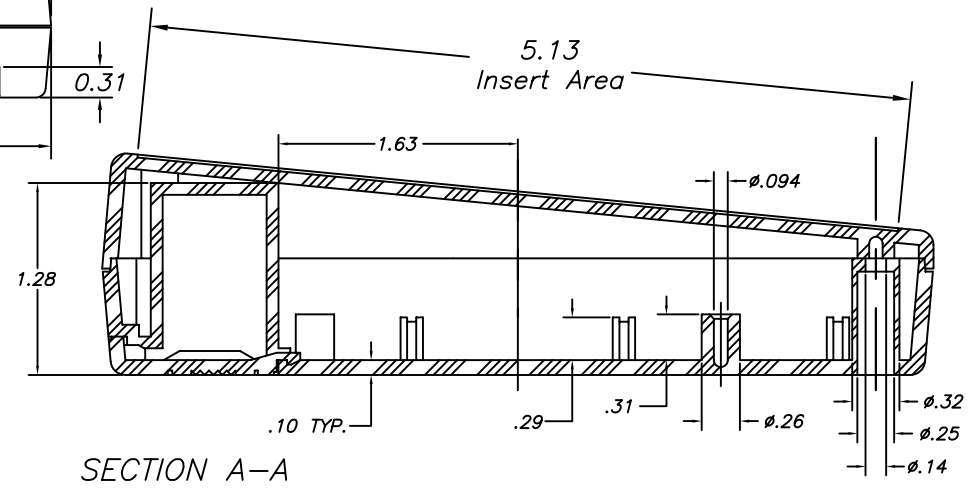

SECTION A–A

10–27–98

ALL DIMENSIONS ± .010

PART NO.	DESCRIPTION
5S	PLASTIC TOP
25	PLASTIC BOTTOM
1025	PLASTIC BATTERY COVER
6004	SCREWS (2)
6005	SCREWS (2)

ACCESSORIES	
PART NO.	DESCRIPTION
50	FEET
359	PROTOTYPE GRID BOARD (HORIZ.)
459	PROTOTYPE CLAD BOARD (HORIZ.)
351	PROTOTYPE GRID BOARD (VERT.)
451	PROTOTYPE CLAD BOARD (VERT.)
PC	POCKET CLIP

619 Commercial Ave. Covina, CA 91723

(626) 331-0517 Fax (626) 331-8584 http://www.serpac.com.