SERPAC 251 (3D exploded)

Electronic Enclosures

-Click on image to show toolbar. Use ▶ ❚❚ to Play/Pause Animation.
-Left click and drag on image to move 3D model.

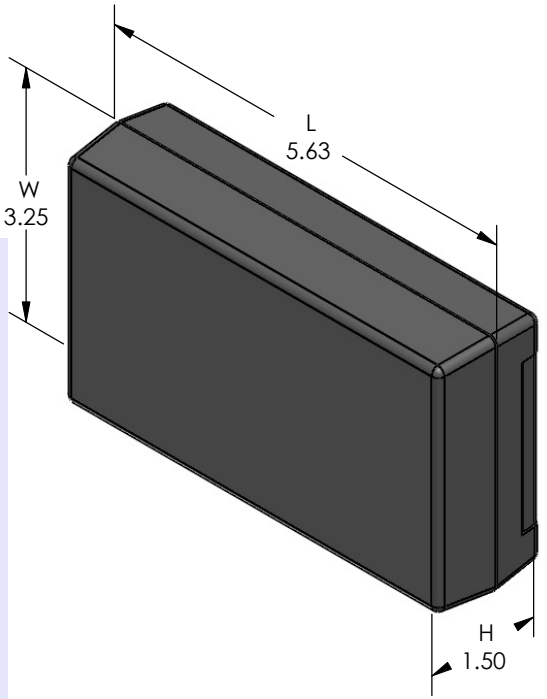

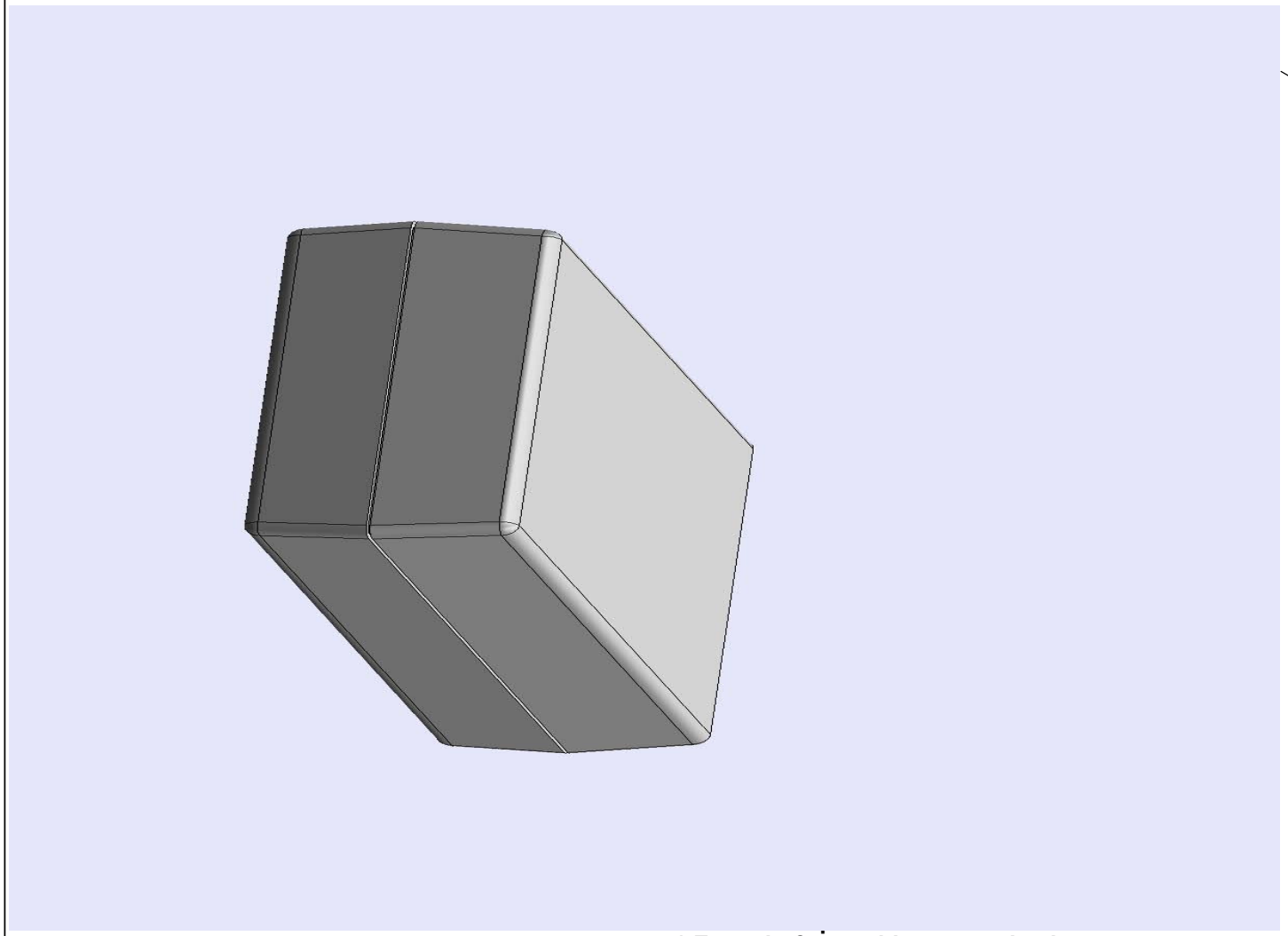

PART NO.	DESCRIPTION **(Included)**	ACCSESSORIES **(Optional)**	
5-1	TOP	PART NO.	DESCRIPTION
25	BOTTOM	359	Prototype grid board
1025	Battery Cover	459	Prototype clad board
6005	#4X3/8" Self tapping (4)	50	Non-skid feet

a) Zoom in & out with center wheel.
b) Pause at any moment to view and or print views.
c) Change the views to ortho and section views if needed from the Views pull down menu.
d) Explore options included in the tool bar like: Views, Transparency of model, Lighting type, etc.

Notes: (Enclosure weight 0.26 lb / 118 gm)
1) Enclosure meets or exceeds IP40 and NEMA 1
2) Circuit Board drawings can be download at:
http://www.serpac.com/Accessories/CircuitBoard/drawings/359-459-cbg.pdf
3) All components are RoHS Compliant.

619 Commercial Ave. Covina, CA 91723
Ph. (626) 331-0517 Fx. (626) 331-8584 serpac.com

SERPAC 251 (user print)

Electronic Enclosures

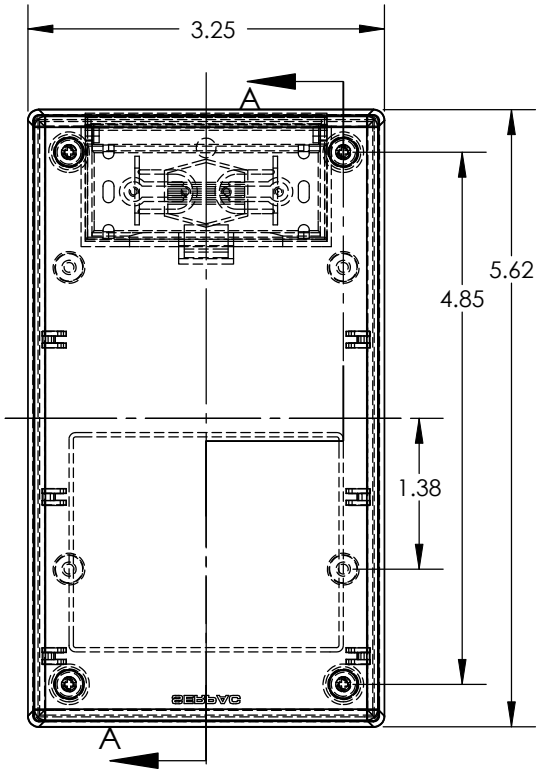

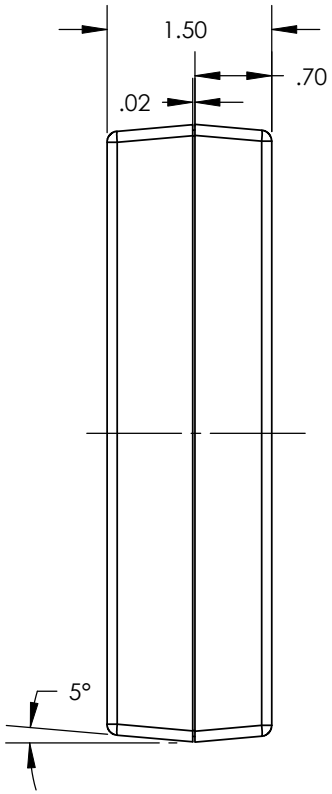

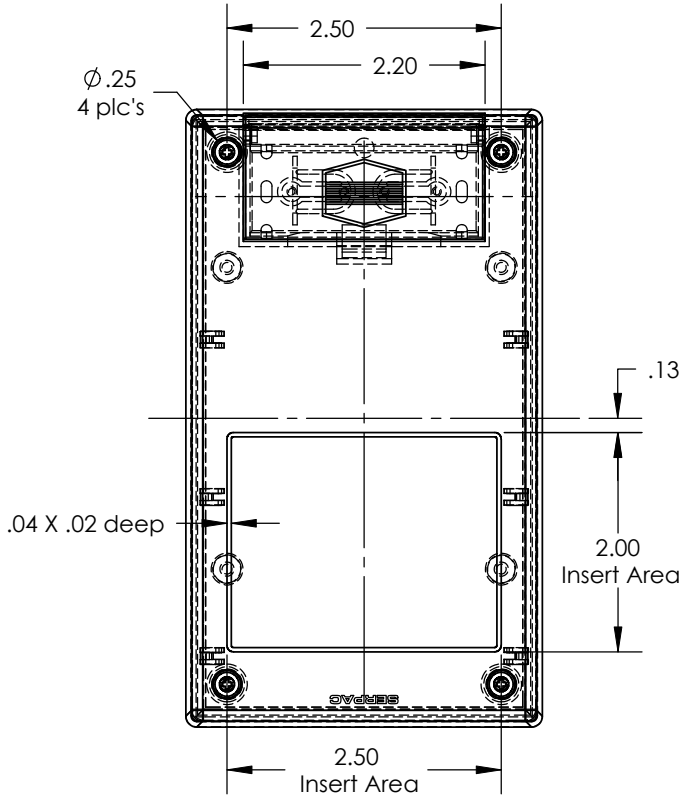

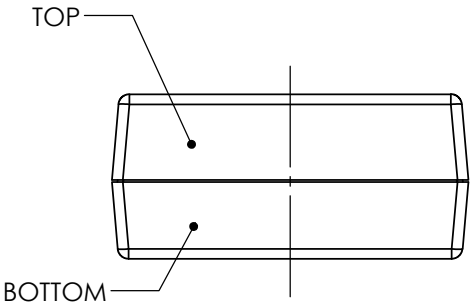

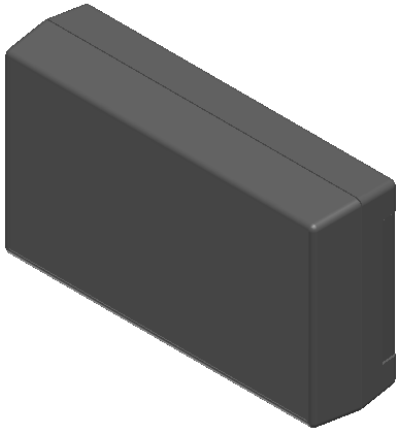

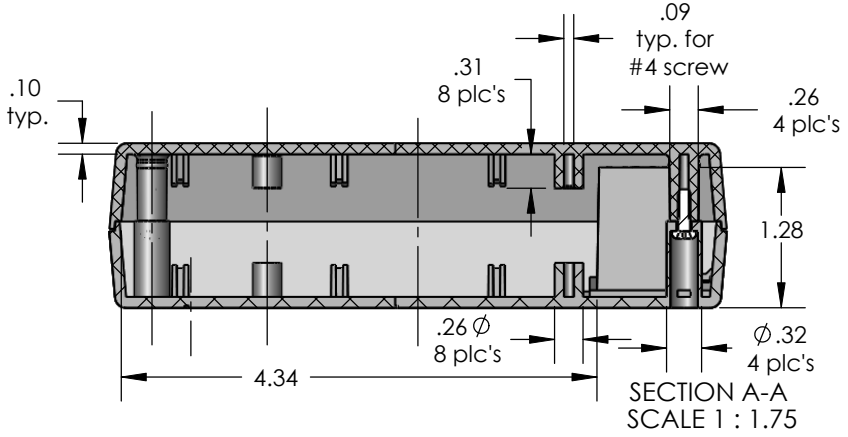

PART NO.	DESCRIPTION (Included)	ACCSESSORIES (Optional)	
5-1	TOP	PART NO.	DESCRIPTION
25	BOTTOM	359	Prototype grid board
1025	Battery Cover	459	Prototype clad board
6005	#4 X3/8" self tapping (4)	50	Non-skid feet

Notes: (Enclosure weight 0.26 lb / 118 gm)

1) Enclosure meets or exceeds IP40 and NEMA 1
2) Circuit Board drawings can be download at:
http://www.serpac.com/Accessories/CircuitBoard/drawings/359-459-cbg.pdf
3) All components are RoHS Compliant.

ALL DIMENSIONS ARE ± .010" 4/12/10 (2 of 2)
619 Commercial Ave. Covina, CA 91723
Ph. (626) 331-0517 Fx. (626) 331-8584 www.serpac.com