DRAWING NUMBER:	**25-9231-1-XXXX**
PRODUCT GROUP:	BANANA PLUGS, JACKS AND PHONE TIPS
SUB-GROUP:	INSULATED BANANA JACKS
DESCRIPTION:	INSULATED STANDARD BANANA PANEL JACK

CONCORD ELECTRONICS
Precision-machined Engineering Solutions

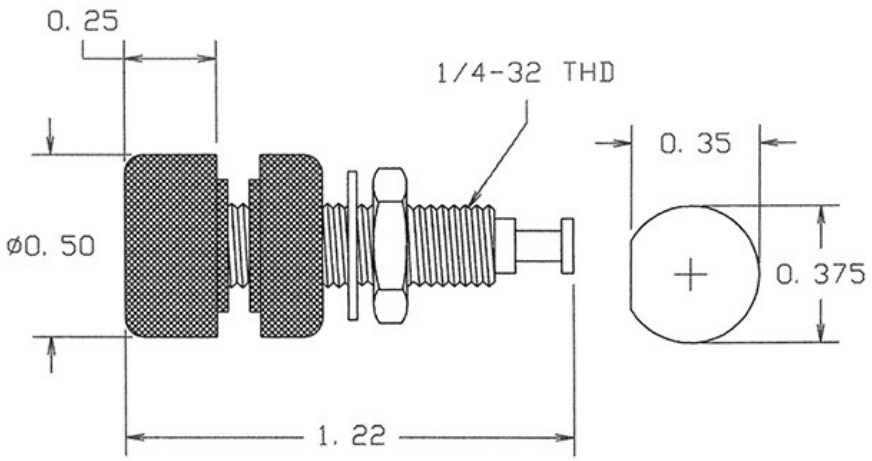

ACCEPTS PIN / PLUG / JACK SIZE	OVERALL LENGTH	MIN. HOLE DEPTH	BOARD / PANEL MOUNTING METHOD
STANDARD BANANA PLUG	1.220"	0.920"	THREAD MOUNT (1/4-32 NUT)

MOUNTING HOLE SIZE	DRILL SIZE	BOARD / PANEL THICKNESS
0.375" x 0.350" "D" HOLE	3/8"	UP TO 3/8"

PART NO. STRUCTURE:

25-9231	-	1	-	XX	XX
PART SERIES		DIMENSION		FINISH	INSULATION COLOR

MATERIAL OPTIONS:

25-9231-1-XXXX

COMPONENT	MATERIAL	MATERIAL AND SPECIFICATION
BODY	BRASS	BRASS PER ASTM B16, ALLOY C36000, 1/2 HARD
JACK SPRING	N/A	N/A
INSULATION*	POLYCARBONATE	POLYCARBONATE PER ASTM D3935
PIN	N/A	N/A
NUT	BRASS	BRASS PER ASTM B16, ALLOY C36000, 1/2 HARD
WASHER	PHOSPHOR BRONZE	PHOSPHOR BRONZE PER ASTM B103, ALLOY C51000
LUG	N/A	N/A

*For Insulation color, please see INSULATION COLOR OPTIONS on Page 2

FINISH - PLATING OPTIONS:

25-9231-1-XXXX

FINISH CODE	COMPONENT	FINISH	FINISH AND SPECIFICATION
03	BODY	GOLD	GOLD FLASH PER ASTM B488, TYPE II, CODE C OVER NICKEL PER SAE-AMS-QQ-N-290
	JACK SPRING	N/A	N/A
	PIN	N/A	N/A
	NUT	NICKEL	0.000100"MIN. NICKEL PER SAE-AMS-QQ-N-290
	WASHER	NICKEL	0.000100"MIN. NICKEL PER SAE-AMS-QQ-N-290
	LUG	N/A	N/A
044	BODY	BRIGHT ELECTRO-TIN	0.000200"MIN. BRIGHT ELECTRO-TIN PER ASTM B545 OVER 0.000100"MIN. NICKEL PER SAE-AMS-QQ-N-290
	JACK SPRING	N/A	N/A
	PIN	N/A	N/A
	NUT	NICKEL	0.000100"MIN. NICKEL PER SAE-AMS-QQ-N-290
	WASHER	NICKEL	0.000100"MIN. NICKEL PER SAE-AMS-QQ-N-290
	LUG	N/A	N/A

INSULATION COLOR OPTIONS:

25-9231-1-XXXX

INSULATION COLOR	BLACK	BROWN	RED	ORANGE	YELLOW	GREEN	BLUE	VIOLET	GRAY	WHITE
COLOR CODE NO.	10	11	12	13	14	15	16	17	18	19

TOLERANCES:*

DECIMAL	FRACTIONAL	ANGULAR
± 0.010	± 1/64	± 5°

DRAWING ORIGINATION DATE	LAST MODIFICATION DATE
5/19/1997	4/1/2017

*All dimensions are in inches.

RoHS COMPLIANCE:

25-9231-1-03XX

PART NUMBER	RoHS COMPLIANT
25-9231-1-0310	YES
25-9231-1-0311	YES
25-9231-1-0312	YES
25-9231-1-0313	YES
25-9231-1-0314	YES
25-9231-1-0315	YES
25-9231-1-0316	YES
25-9231-1-0317	YES
25-9231-1-0318	YES
25-9231-1-0319	YES

25-9231-1-044XX

PART NUMBER	RoHS COMPLIANT
25-9231-1-04410	YES
25-9231-1-04411	YES
25-9231-1-04412	YES
25-9231-1-04413	YES
25-9231-1-04414	YES
25-9231-1-04415	YES
25-9231-1-04416	YES
25-9231-1-04417	YES
25-9231-1-04418	YES
25-9231-1-04419	YES

NOTES:

DATASHEET NOTES

RATED: 15 AMPERES CAPACITY, 2500 WVDC MAX , 115°C MAX. CLOSED ENTRY JACK, MOUNTS IN "D" HOLE IN PANEL. NUT PART NUMBER: 701-7415-02. INTERNAL TOOTH LOCKWASHER PART NUMBER: 701-7705.

INSTRUCTION NOTES

SUPPLIED WITH: MOLDED POLYCARBONATE CAP AND WASHER, NICKEL PLATED BRASS HEX NUT (1/4-32 x 3/8" x 3/32") AND NICKEL PLATED PHOSPHOR BRONZE INTERNAL TOOTH LOCKWASHER (1/4").