Schroff®

Main Catalogue



Edition 23

6. Subracks/19" chassis



Pentair
Technical Products

Overview 0
Cabinets 1
Wall mounted cases 2
Accessories for cabinets and wall mounted cases 3
Climate control 4
Desk-top cases 5
Subracks/ 19" chassis 6
Front panels, plug-in units 7
Systems 8
Power supply units 9
Backplanes 10
Connectors, front panel component system 11
Appendix 12

europacPRO

19" subrack with high flexibility
EMC shielding upgradeable
Conforms to IEC 60298-3-103 and IEEE 1011.10/11
Kit from stock or to individual configuration

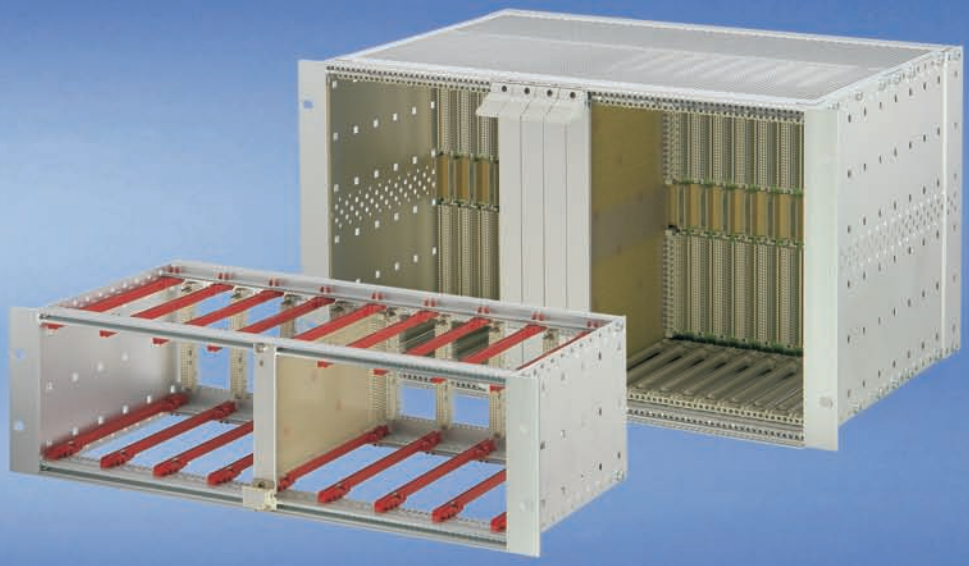

europacPRO for mobile rail applications

Shock and vibration tested to
- IEC 61587-1, EN 50155
- BN 411002 and BN 411003
- NF F 61-005 / NF F 60-002

Kit from stock or to individual configuration

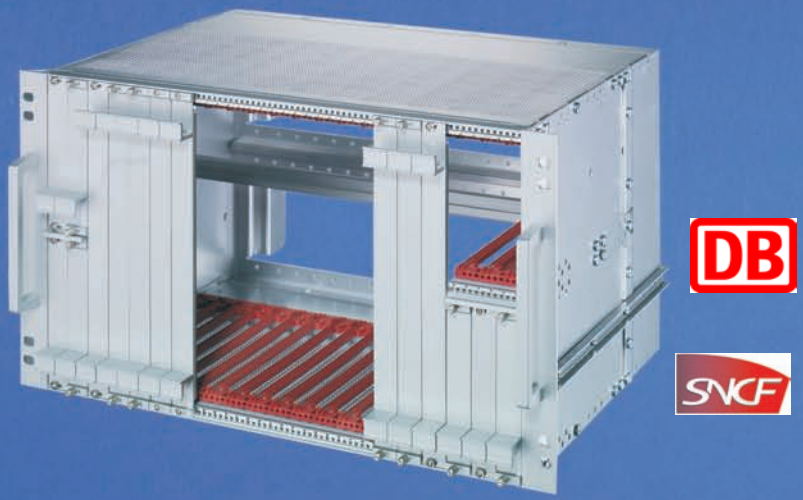

36106005 (06109001 06104001)

Subracks/19" chassis

Overview 6.0

europacPRO . . 6.2

Subracks for mobile rail applications . . 6.74

multipac. 6.90

inpac 6.108

Application examples

europacPRO 6.73

Subracks for mobile rail applications 6.89

multipac. 6.106

multipacPRO

19" chassis for non-standard components
and horizontal board construction
Version in aluminium and steel plate (AlZn coated)
Kits from stock or to individual configuration



inpac

19" chassis with high mechanical stability
Flexible construction for standard board formats
or individual solutions
Can be used as a desk-top enclosure

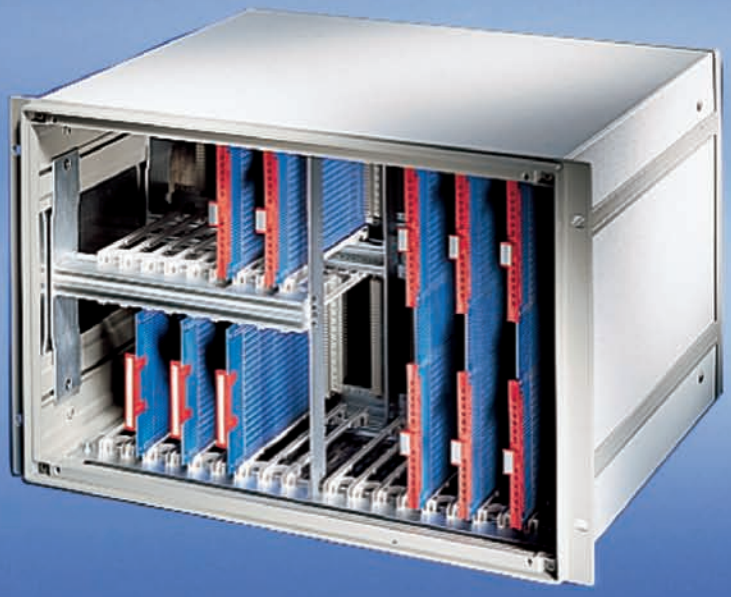

36106006 (06002001 02192004)

Overview 0
Cabinets 1
Wall mounted cases 2
Accessories for cabinets and wall mounted cases 3
Climate control 4
Desk-top cases 5
Subracks/ 19" chassis 6
Front panels, plug-in units 7
Systems 8
Power supply units 9
Backplanes 10
Connectors, front panel component system 11
Appendix 12

Subracks – *europac PRO*

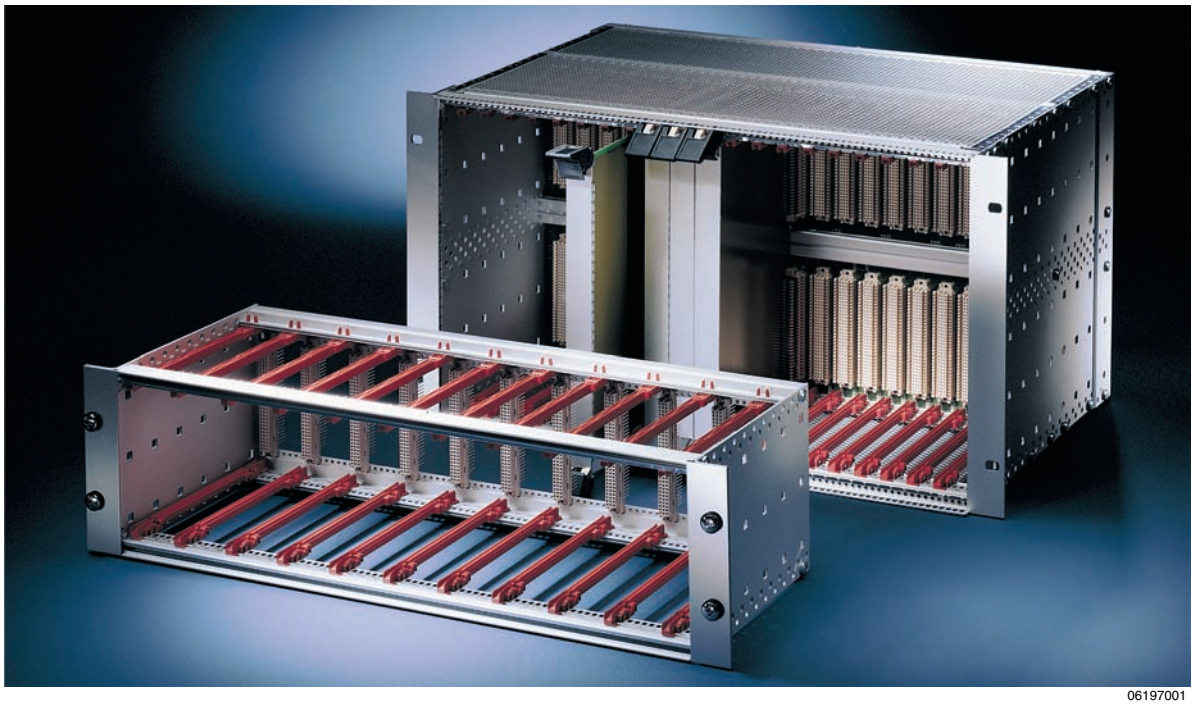

06197001

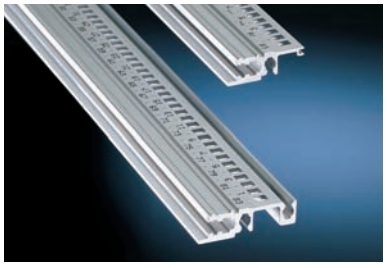

08

Horizontal rails in lightweight ("light") or robust ("heavy") versions



04602002

The IEEE handle and shielded front panels are designed for the construction of CompactPCI and VME64x subrack systems

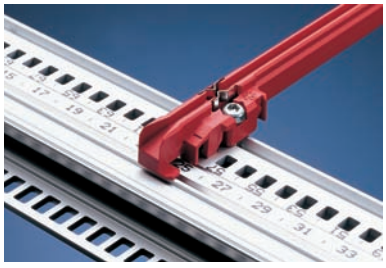

06

Sequential numbering on horizontal rails (> 28 HP) and markings on the guide rails provide quick optical positioning aids.
ESD clips applicable to front and rear protect the electronics against electrostatic discharge.

Standards/certifications

- Inner and outer dimensions meet: IEC 60297-3-100, -101, - 102, -103, -104, IEEE 1101.1 and IEEE 1101.10/11
- Type of protection IP 20 in accordance with IEC 60529
- EMC testing to IEC 61587-3
- Shock and vibration test report: German "Bahn" standards BN 411002, BN 411003; NF F 60002, NF F 67012 IEC 61587-2, EN 50155
- Nuclear plants KTA 1401

EMC curve

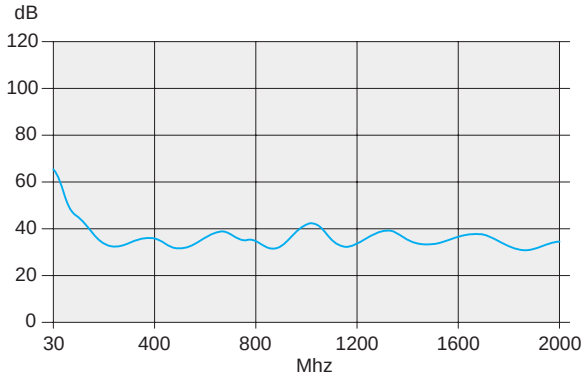

06108081

Downloads and further important information can be found on the Internet under www.schroff.biz

Overview 6.2

19" subracks

- **Kits or individual configuration**
- **EMC shielding easily retrofittable if needed**
- **Designed for extractor handles to IEEE 1101.10/11 and IEC 60297-3-103 for CompactPCI and VME 64x application**
- **IEEE 1101.1 compatible**
- **Shock and vibration resistant to IEC 61587-2, EN 50155, NF F 67012/NF F 60002, German railway standards BN 411002/411003**

Introduction 6.4

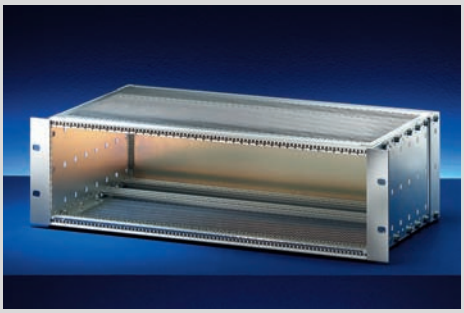

06102007

Kits

- Heights 3, 6 U and depths 175 ... 475 mm
- In "light" and robust "heavy" versions
- Unshielded and shielded versions
- Shielded versions for CompactPCI applications
- Delivered as flatpack

Kits
Unshielded 6.6
Shielded. 6.11
Shielded, for CompactPCI 6.13

Individual configuration . 6.16

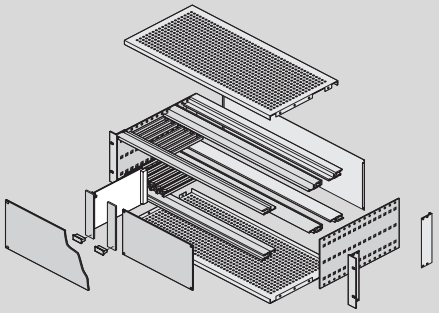

06105058

ServicePLUS configuration

- Height from 3 to 9 U
- Width from 20 HP to 1 m
- Shielded, unshielded
- Flexible internal mounting/combined mounting
- Other accessories and assembly parts

ServicePLUS configuration
Side panels 6.19
Horizontal rails, threaded inserts, perforated strips . 6.26
Guide rails 6.34
Cover plates 6.42
EMC shielding. . . 6.51
Internal mounting 6.57
Assembly parts . . 6.67

Application examples 6.73

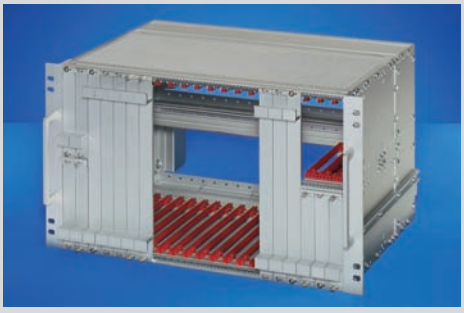

06104008

Subracks for use on rolling stock

- Shielded and unshielded versions
- Certification in accordance with
  - European Railway Standard DIN EN 50155
  - German Railway Standards BN 411002, BN 411003
  - French Railway Standards NF F 61-005, NF F 60-002

Subracks for use on rolling stocksee page . 6.74



30407004

ServicePLUS from page 6.16

e.g. individual configuration and assembly
e.g. modifications (cut-outs)
e.g. downloads (CAD drawings, user manuals, test reports)
e.g. custom solutions

www.schroff.biz/serviceplus/

Subracks – *europac**PRO*** Introduction

Platform-based standard solutions for individual requirements

Practical technology without time-consuming assembly. The modular europacPRO product platform can cover a wide range of possible applications with only a few components. The intelligent design of all components results in remarkably simple and fast management in assembly and components.

Two ways of reaching your desired product:

- Kits
- Individual configuration

Simple assembly with europacPRO kits:

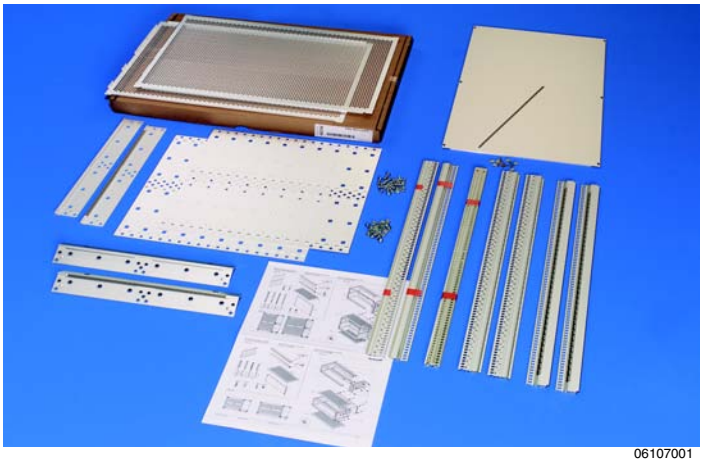

06107001

Delivered in space-saving flat packs. Simply unpack the parts and bolt together. The threaded inserts or EMC sealing (depending on selected kit) are already pre-mounted on the horizontal rail.

Individual configuration:

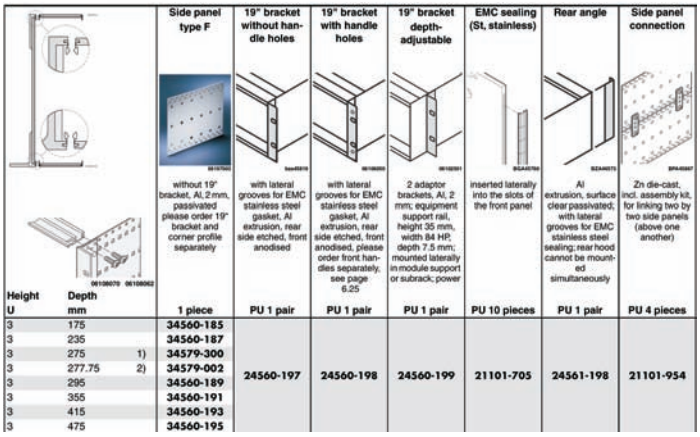

Height U	Depth mm		Side panel type F	19" bracket without handle holes	19" bracket with handle holes	19" bracket depth-adjustable	EMC sealing (St, stainless)	Rear angle	Side panel connection
			without 19" bracket, Al, 2 mm, passivated please order 19" bracket and corner profile separately	with lateral grooves for EMC stainless steel gasket, Al extrusion, rear side etched, front anodised	with lateral grooves for EMC stainless steel gasket, Al extrusion, rear side etched, front anodised, please order front handles separately; see page 6.25	2 adaptor brackets, Al, 2 mm; equipment support rail, height 35 mm, width 84 HP, depth 7.5 mm; mounted laterally in module support or subrack; power	inserted laterally into the slots of the front panel	Al extrusion, surface clear passivated; with lateral grooves for EMC stainless steel sealing; rear hood cannot be mounted simultaneously	Zn die-cast, incl. assembly kit, for linking two by two side panels (above one another)
			1 piece	PU 1 pair	PU 1 pair	PU 1 pair	PU 10 pieces	PU 1 pair	PU 4 pieces
3	175		**34560-185**						
3	235		**34560-187**						
3	275	1)	**34579-300**						
3	277.75	2)	**34579-002**	**24560-197**	**24560-198**	**24560-199**	**21101-705**	**24561-198**	**21101-954**
3	295		**34560-189**						
3	355		**34560-191**						
3	415		**34560-193**						
3	475		**34560-195**						

06109052

You design your subrack as you wish, then receive it fully assembled with our **ServicePLUS assembly service** (even for orders of just one). We can also carry out individual modifications and cut-outs; and can do so very fast when time is short with ServicePLUS express.

Horizontal rails for different load-carrying classes

Light

Heavy



06197007 06197008

There are horizontal rails for two load-carrying classes, "light" (load up to approx. 7.5 kg) and "heavy" (load > 7.5 kg). The light horizontal rails for optimised airflow or the especially robust version with lateral 2-hole fixing.

There is a consecutive numbering on the horizontal rail (>28 HP), that serves for an easy positioning of the guide rails.

By means of ESD clips a conductive connection between horizontal rail (subrack) and PCB is created.

Side panels for three different applications

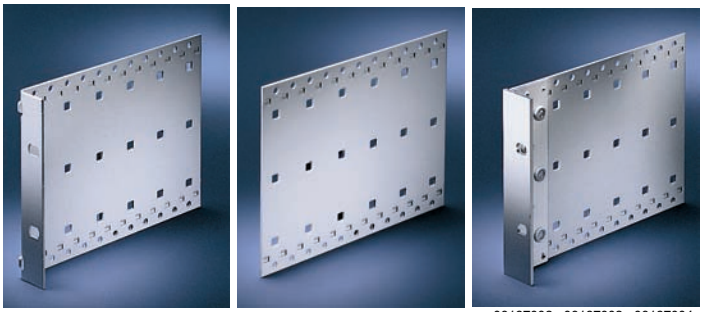

06197002 06197003 06197004

Type L Type F Type H

Side panels for 3 different applications

- Light, low-cost version with integrated 19" mounting bracket (type L, unshielded)
- Flexible with separate 19" mounting bracket (type F, shielded)
- Heavy-duty with integrated (Tox-cold welded) 19" mounting bracket for extreme mechanical loads (type H, shielded), e.g. for applications with high shock and vibration

Part number in bold face type: ready for despatch within 2 working days
Part number in normal type: ready for despatch within 10 working days

Subracks – *europac**PRO*** Introduction

Guide rails in plastic and aluminium profiles

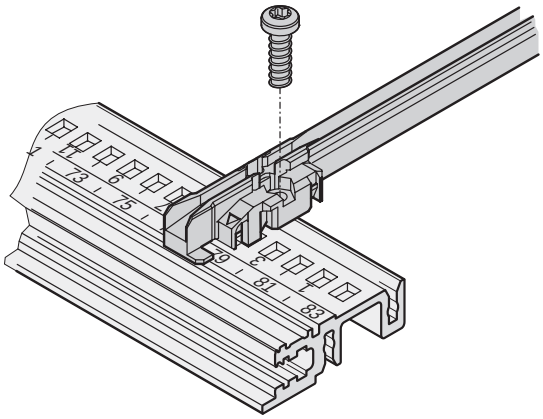

06108084

Guide rails form the interface between the subrack mechanics and the sub-assemblies (PCBs, plug-in units, frame-type plug-in units, plug-in drive units ...).

Robust snap-in fixings on the plastic rails ensure steadiness, even when vibration occurs. With H-type horizontal rails the guide rails can additionally be bolted on.
For extreme stresses, guide rails in aluminium profile may be used.

To avoid a wrong sub-assembly being inserted into the wrong place, we offer a mechanical coding to IEEE 1101.10/11, IEC 60297-3-103.

The continuous numbering on the horizontal rail (from 28 HP) and the marking on the guide rails facilitate quick fitting in the correct position.

Electromagnetic shielding and ESD

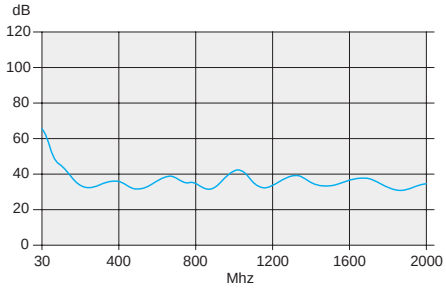

06108081

The product platform europacPRO offers a variety of off-the-shelf solutions to achieve electromagnetic compatibility (EMC) and to avoid electrostatic discharges (ESD).

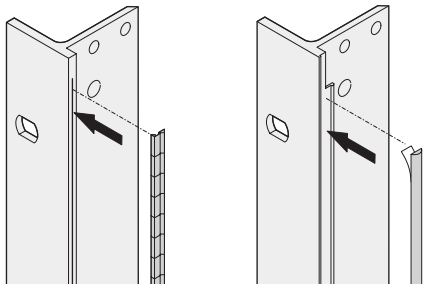

06108074 06108073

It can't be more secure! The shielding to the front of the subrack is achieved by EMC stainless steel or textile gaskets.

An all-round contact guarantees complete shielding.

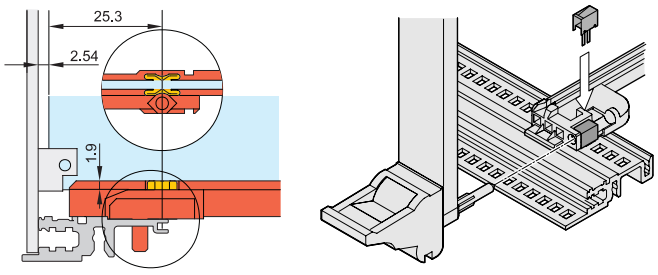

04503050 06103052

To avoid electrostatic discharges when inserting PCBs, ESD contacts are clipped into the guide rails. These establish a conductive connection between PCB and subrack-earth.

According to IEC 60297-3-101 two ESD areas are defined on the euroboard. The ESD clips on the guide rails of the europacPRO subrack allow the assembly of following variants:

- ESD area (to bottom and top) via the complete board height
- ESD area (to bottom/top) starts at the the front from 70 mm up to the board's end)

Kit, unshielded, "light", for fitting of male connector

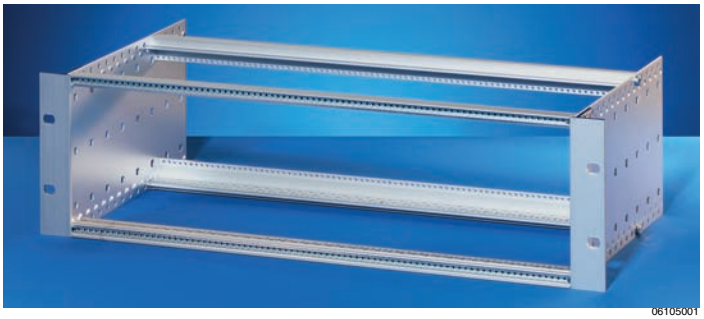

- Subrack in lightweight version ("light")
- Rear horizontal rails for connector mounting (IEC 60603-2/DIN 41612)

Delivery comprises (kit)

Item	Qty 3 U	Qty 6 U	Description
1	2	2	19" support bracket for stainless steel EMC gasket
2	2	2	Side panel type F
3a	2	2	Front horizontal rail (L-KD)
3b	2	2	Rear horizontal rail (L-MZ) for connector mounting
3c	-	1	Centre horizontal rail (MZ)
4	2	2	Threaded insert to front (pre-fitted)
5	1	1	Assembly kit
6	1	1	User manual

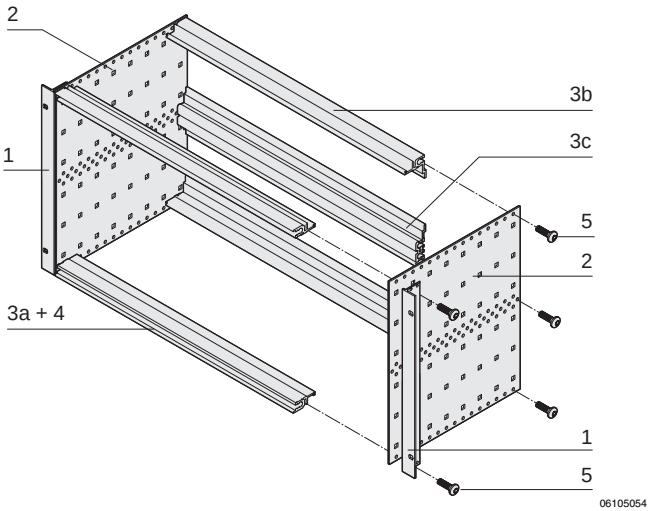

6 U

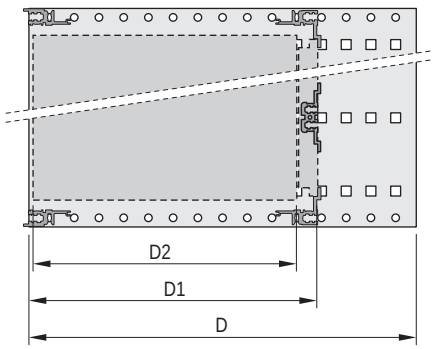

D=total depth, D1=insertion depth, D2=board depth

Order Information

Height U	Width HP	Depth D mm	Depth D1 mm	Depth D2 mm	Part no.
3	84	175	175	160	**24563-191**
3	84	235	175/235	160/220	**24563-192**
3	84	295	175/235/295	160/220/280	**24563-193**
3	84	355	175/235/295/355	160/220/280/340	**24563-194**
6	84	175	175	160	**24563-491**
6	84	235	175/235	160/220	**24563-492**
6	84	295	175/235/295	160/220/280	**24563-493**
6	84	355	175/235/295/340	160/220/280/340	**24563-494**
Assembly kit, PU 8 x screw, washer, nut for assembly of subracks in a 19" case or a cabinet					**21100-435**

Guide rails (standard), ESD clips

Depth D2 mm	Qty/PU	Part no.
160	10	**24560-351**
220	10	**24560-353**
280	10	**24560-379**
340	10	**24560-380**
ESD clip for guide rails PU 50 pieces		**24560-255**

Note

- Cover plates and assembly kit from page 6.9
- Further accessories from page 6.57
- ServicePLUS configuration from page 6.16

For further information www.schroff.biz/oneclick
oneClick search code = Part no.



Horizontal rail to rear for connector mounting

ServicePLUS see page 6.16

Part number in bold face type: ready for despatch within 2 working days
Part number in normal type: ready for despatch within 10 working days

Kit, unshielded, "light", for backplane mounting

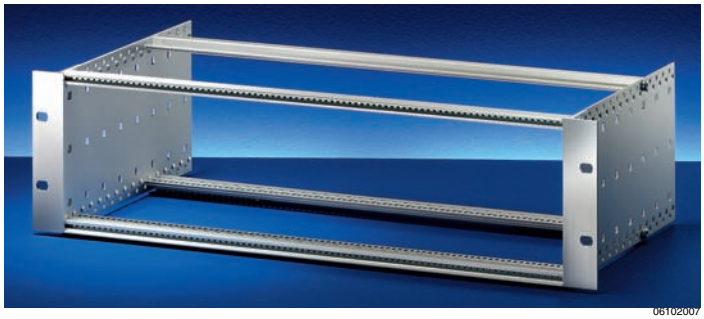

06102007

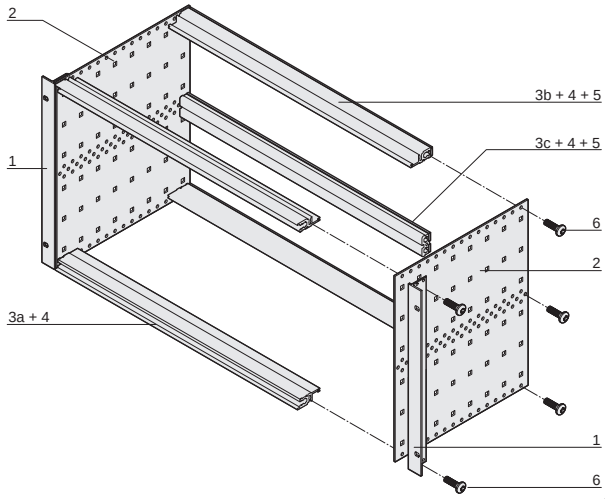

06102081

6 U

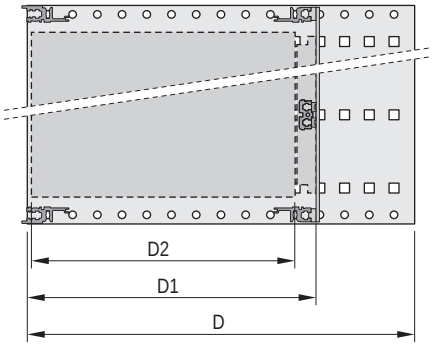

06108051

D=total depth, D1=insertion depth, D2=board depth

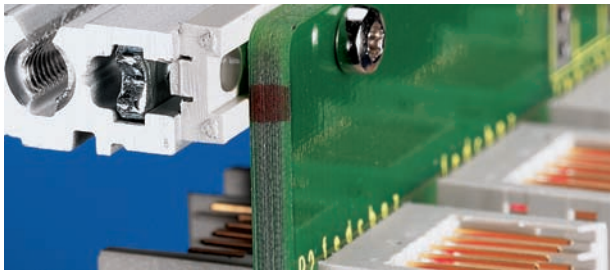

04400001

Rear horizontal rail with insulation strip for backplane mounting

ServicePLUS see page 6.16

- Subrack in lightweight version ("light")
- Rear horizontal rail with insulation strip for backplane mounting

Delivery comprises (kit)

Item	Qty 3 U	Qty 6 U	Description
1	2	2	19" support bracket for stainless steel EMC gasket
2	2	2	Side panel type F
3a	2	2	Front horizontal rail (L-KD)
3b	2	2	Rear horizontal rail (L-ST) for backplane mounting with insulation strip
3c	-	1	Centre horizontal rail (ST)
4	4	6	Threaded inserts, to front and rear, pre-fitted
5	2	4	Insulation strip (pre-fitted)
6	1	1	Assembly kit
7	1	1	User manual

Order Information

Height U	Width HP	Depth D mm	Depth D1 mm	Depth D2 mm	Part no.
3	84	175	175	160	**24563-131**
3	84	235	175/235	160/220	**24563-132**
3	84	295	175/235/295	160/220/280	**24563-133**
3	84	355	175/235/295/355	160/220/280/340	**24563-134**
3	84	415	175/235/295/355	160/220/280/340	**24563-135**
3	84	475	175/235/295/355	160/220/280/340	**24563-136**
6	84	175	175	160	**24563-431**
6	84	235	175/235	160/220	**24563-432**
6	84	295	175/235/295	160/220/280	**24563-433**
6	84	355	175/235/295/355	160/220/280/340	**24563-434**
6	84	415	175/235/295/355	160/220/280/340	**24563-435**
6	84	475	175/235/295/355	160/220/280/340	**24563-436**
Assembly kit, PU 8 x screw, washer, nut for assembly of subracks in a 19" case or a cabinet					**21100-435**

Guide rails (standard), ESD clips

Tiefe D2 mm	Qty/PU	Part no.
160	10	**24560-351**
220	10	**24560-353**
280	10	**24560-379**
340	10	**24560-380**
ESD clip for guide rails PU 50 pieces		**24560-255**

Note

- Perforated rail, cover plates and assembly kit from page 6.10
- Further accessories from page 6.57
- ServicePLUS configuration from page 6.16

Kit, unshielded, 'heavy', for backplane mounting

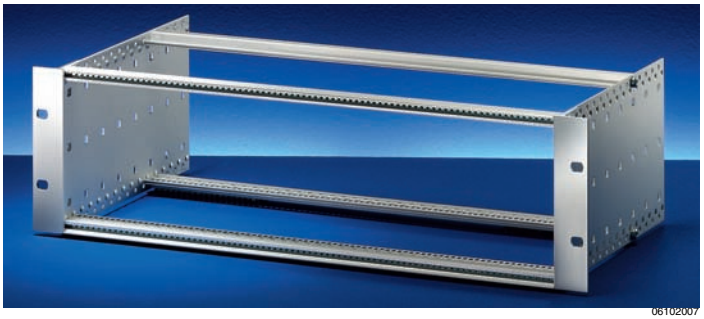

06102007

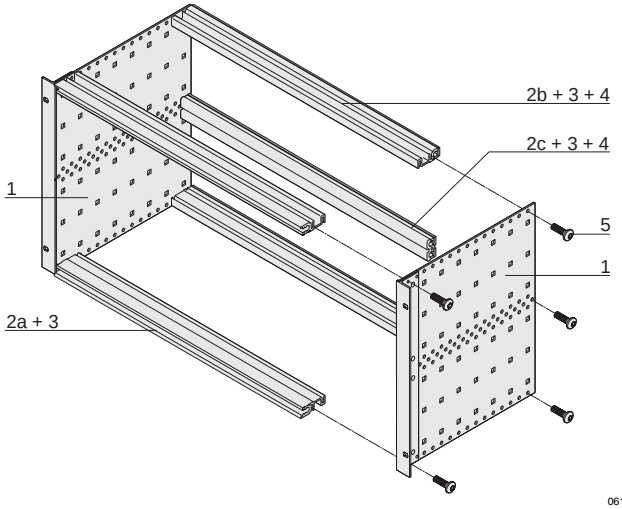

06107053

6 U

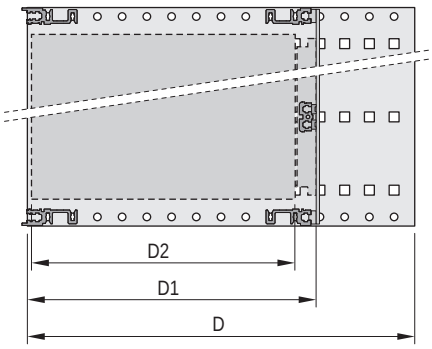

06108052

D=total depth, D1=insertion depth, D2=board depth

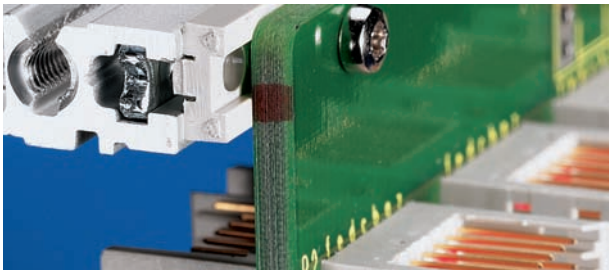

04400001

Rear horizontal rail with insulation strip for backplane mounting

ServicePLUS see page 6.16

- Subrack in robust version ("heavy"), 19" bracket is firmly joined to side panel (Tox-cold welded)
- Rear horizontal rail with insulation strip for backplane mounting
- Tested in accordance with German railway standard BN 411002, BN 411003

NEW

Delivery comprises (Kit)

Item	Qty 3 U	Qty 6 U	Description
1	2	2	Type H (heavy) side panel with 19" support bracket for textile EMC gasket
2a	2	2	Front horizontal rail (H-KD)
2b	2	2	Rear horizontal rail (H-ST) with insulation strip for backplane mounting
2c	-	1	Centre horizontal rail (ST)
3	4	6	Threaded insert (pre-fitted)
4	2	4	Insulation strip (pre-fitted)
5	1	1	Assembly kit
6	1	1	User manual

Order Information

Height U	Width HP	Depth D mm	Depth D1 mm	Depth D2 mm	Part no.
3	84	175	175	160	**24563-161**
3	84	235	175/235	160/220	**24563-162**
3	84	295	175/235/295	160/220/280	**24563-163**
3	84	355	175/235/295/355	160/220/280/340	**24563-164**
6	84	175	175	160	**24563-461**
6	84	235	175/235	160/220	**24563-462**
6	84	295	175/235/295	160/220/280	**24563-463**
6	84	355	175/235/295/355	160/220/280/340	**24563-464**
Assembly kit, PU 8 x screw, washer, nut for assembly of subracks in a 19" case or a cabinet					**21100-435**

Guide rails (standard), ESD clips Depth D2 mm	Qty/PU	Part no.
160	10	**24560-351**
220	10	**24560-353**
280	10	**24560-379**
340	10	**24560-380**
ESD clip for guide rails PU 50 pieces		**24560-255**
Torx panhead screw for extra bolting of the guide rails, 2.5 × 9.3, zinc-plated, PU 100 pieces		**24560-141**

Note

- Textile EMC gaskets see page 6.21
- Further accessories from page 6.57
- ServicePLUS configuration from page 6.16

For further information www.schroff.biz/oneclick
oneClick search code = Part no.

Part number in bold face type: ready for despatch within 2 working days
Part number in normal type: ready for despatch within 10 working days

Cover plates for 'light' subrack

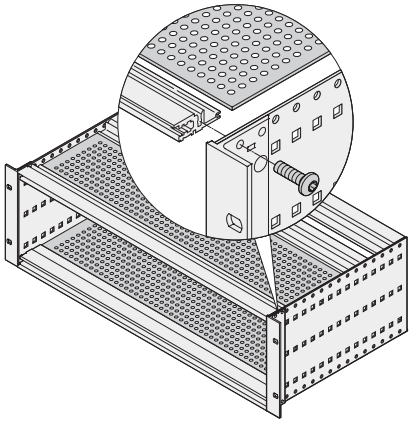

06108077

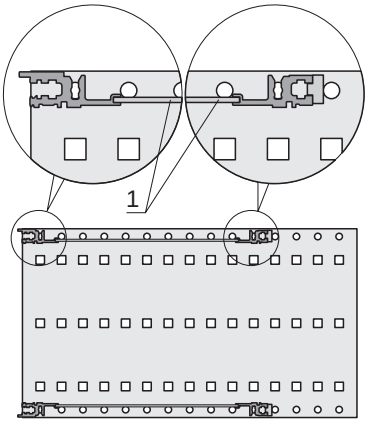

06108058

- Mechanical cover to push into the groove of the horizontal rails type "light"
- Perforation degree 60 %

Delivery comprises

Item	Qty	Description
1	2	Cover plate, perforated aluminium plate, 1.2 mm, hole diameter 3.8 mm, untreated

Order Information

Depth D2 mm	Width HP	Qty/PU	Part no.
160	84	2	**24561-051**
220	84	2	**24561-052**

Note

- Other dimensions available on request

For further information www.schroff.biz/oneclick
oneClick search code = Part no.

Cover plates for subrack

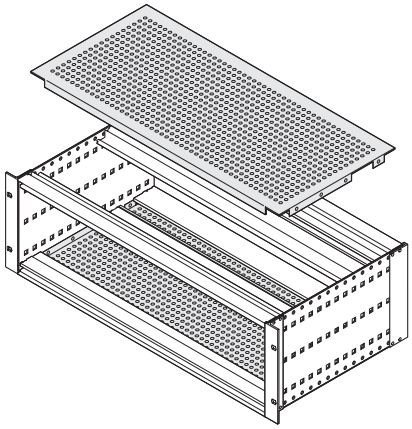

06102084

- Mechanical cover to bolt onto the side panel
- For fitting of 160, 220 or 280 mm deep PCBs
- Suitable for all horizontal rails
- Perforation degree 58 %

Delivery comprises

Item	Qty	Description
1	2	Cover plate, Al, 1.0 mm, hole diameter 4.0 mm, iridescent green chromated
2	16/20/32	Torx screws, 4 × 6, pentaform, self-tapping, St, zinc-plated

Order Information

Depth D2 mm	Width HP	Qty/PU	Part no.
160	84	2	**24560-078**
220	84	2	**24560-079**
280	84	2	**24560-080**
340	84	2	**24560-081**

For further information www.schroff.biz/oneclick
oneClick search code = Part no.

Perforated rail for connector EN 60603-2/DIN 41612

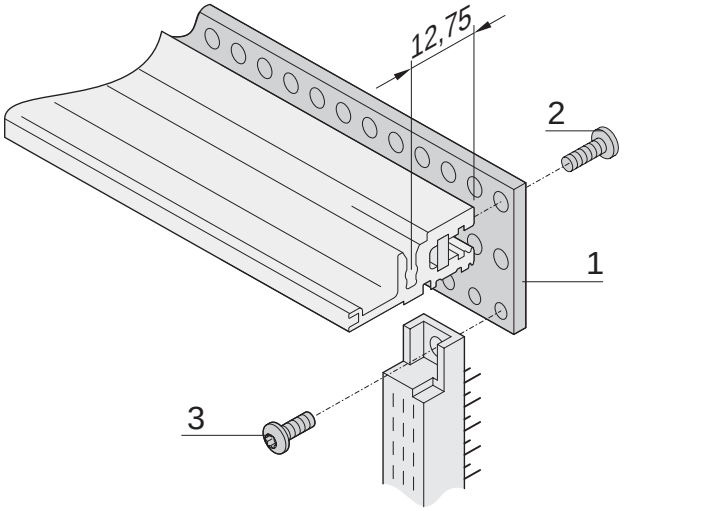

06708051

- Insulated mounting of connectors (EN 60603-2/DIN 41612) on subracks (e.g. connector for a power supply unit)
- Perforated rails are bolted to the subrack for connector mounting (rear horizontal rail type ST, threaded insert fitted, insulation strip)

Delivery comprises

Item	Qty	Description
1	4	Perforated rail, 2 mm, Al clear passivated, mounting holes 2.8 mm, fixing for connectors M2.5

Order Information

Usable length HP	Length mm	Qty/PU	Part no.
28	142.24	4	**20822-049**
42	213.36	4	**20822-050**
60	304.8	4	**20822-047**
84	426.7	4	**20822-048**
Item 2 Torx panhead screw for fixing perforated rails to the horizontal rail, M2.5 × 10, PU 100 pieces			**24560-148**
Item 3 Torx panhead screw to fix connector to perforated rail, M2.5 × 7, PU 100 pieces			**24560-147**

■ Connectors see page 11.4

Z-rail for connector mounting

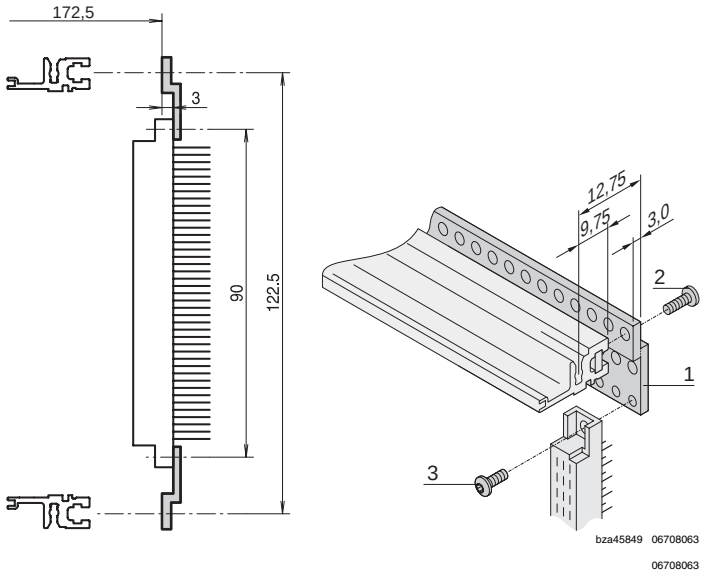

bza45849 06708063
06708063

- in accordance with EN 60603-2 (DIN 41612)

Delivery comprises

Item	Qty	Description
1	1	Z-rail, Al extrusion, anodised

Order Information

Usable length HP	Length mm	Part no.
28	142.24	**30822-033**
40	203.2	**30822-045**
42	213.36	**30822-047**
60	304.8	**30822-065**
84	426.7	**30822-089**
Item 2 Torx panhead screw, M2.5 × 10, PU 100 pieces		**24560-147**
Item 3 Torx panhead screw, M2.5 × 7, PU 100 pieces		**24560-148**

Note

- To fix Z-rail onto horizontal rail a threaded insert is needed, see page 6.32

Kit, shielded, "light", for backplane mounting

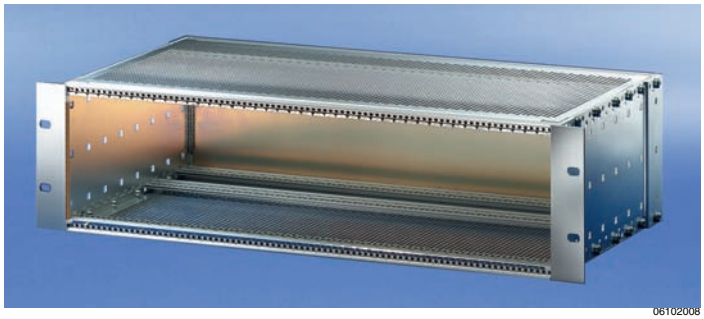

06102008

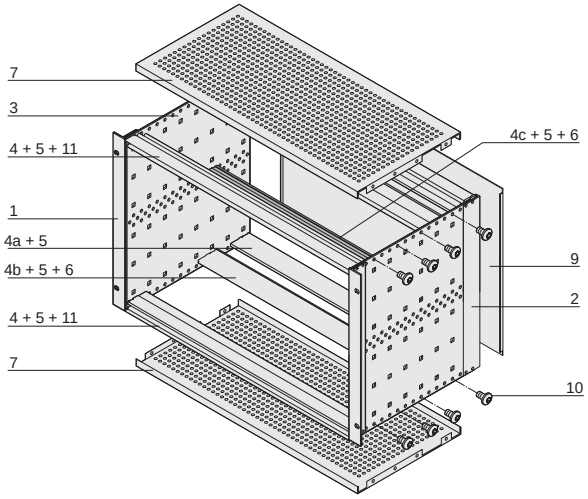

06102075

6 U

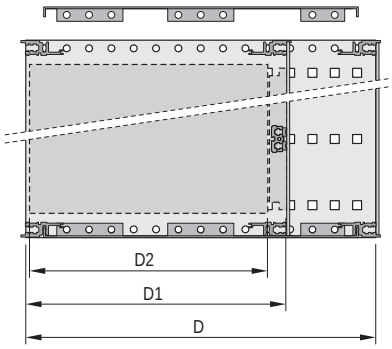

06108053

D=total depth, D1=insertion depth, D2=board depth

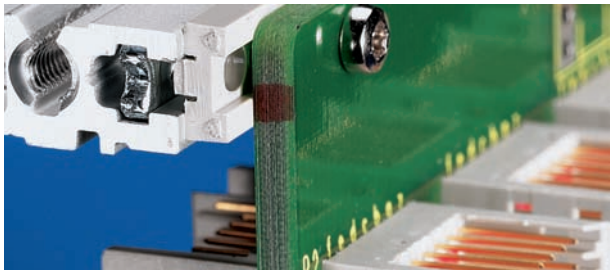

04400001

Rear horizontal rail with insulation strip for backplane mounting

ServicePLUS see page 6.16

- Subrack in lightweight version ("light")
- Rear horizontal rail with insulation strip for backplane mounting
- Typical shielding 40 dB at 1 GHz, 30 dB at 2 GHz (in accordance with VG 95373, part 15), on condition that the front is sealed with shielded front panels

Delivery comprises (Kit)

Item	Qty 3 U	Qty 6 U	Description
1	2	2	19" support bracket for **EMC textile gasket**
2	2	2	Corner profile to rear for **EMC textile gasket**
3	2	2	Side panel type F
4	2	2	Front horizontal rail (L-KD)
4 a	2	2	Rear horizontal rail (L-KD)
4 b	2	2	Rear horizontal rail (L-ST) for backplane mounting with insulation strip
4 c	-	1	Centre horizontal rail (ST)
5	6	8	Threaded insert (pre-fitted)
6	2	4	Insulation strip, fixed
7	2	2	EMC cover plate
8	1	1	EMC gasketing material (pre-fitted)
9	1	1	Rear panel
10	1	1	Assembly kit
11	2	2	Perforated strip (pre-fitted)
12	1	1	User manual

Order Information

Height U	Width HP	Depth D mm	Depth D1 mm	Depth D2 mm	Part no.
3	84	235	175/235	160/220	**24563-142**
3	84	295	175/235/295	160/220/280	**24563-143**
3	84	355	175/235/295	160/220/280	**24563-144**
3	84	415	175/235/295	160/220/280	**24563-145**
3	84	475	175/235/295	160/220/280	**24563-146**
6	84	235	175/235	160/220	**24563-442**
6	84	295	175/235/295	160/220/280	**24563-443**
6	84	355	175/235/295	160/220/280	**24563-444**
6	84	415	175/235/295	160/220/280	**24563-445**
6	84	475	175/235/295	160/220/280	**24563-446**
Assembly kit, PU 8 x screw, washer, nut for assembly of subracks in a 19" case or a cabinet					**21100-435**

Guide rails (standard), ESD clips

Depth D2 mm	Qty/PU	Part no.
160	10	**24560-351**
220	10	**24560-353**
280	10	**24560-379**
ESD clip for guide rails PU 50 pieces		**24560-255**

Note

- Perforated rail for connectors see page 6.33
- Further accessories from page 6.57
- ServicePLUS configuration from page 6.16

Kit, shielded, "heavy", for backplane mounting

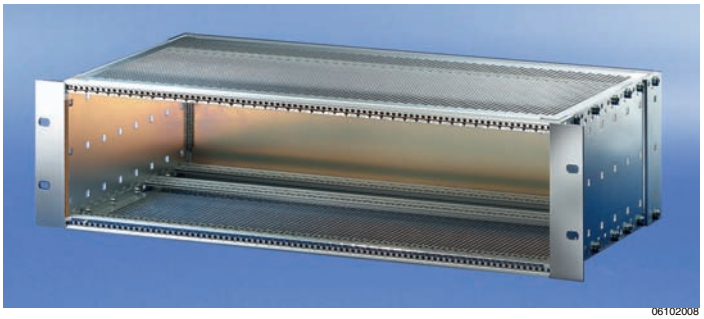

06102008

- Subrack in robust version ("heavy"), 19" bracket is firmly joined to side panel (Tox-cold welded)
- Rear horizontal rail with insulation strip for backplane mounting
- Typical shielding 40 dB at 1 GHz, 30 dB at 2 GHz (as to VG 95373, part 15), on condition that the front is sealed with shielded front panels
- Tested to German railway standard BN 411002, BN 411003

NEW

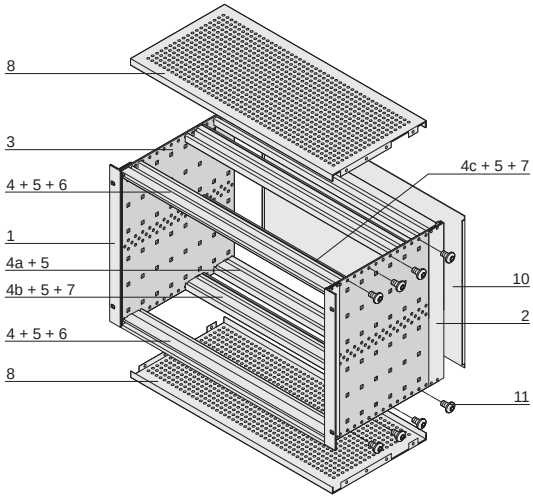

06107055

6 U

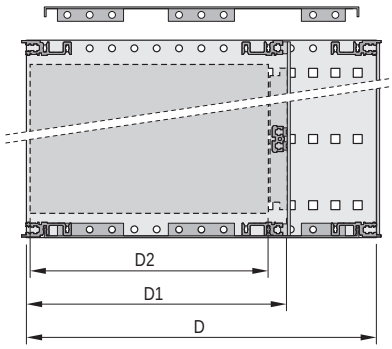

06108060

D=total depth, D1=insertion depth, D2=board depth

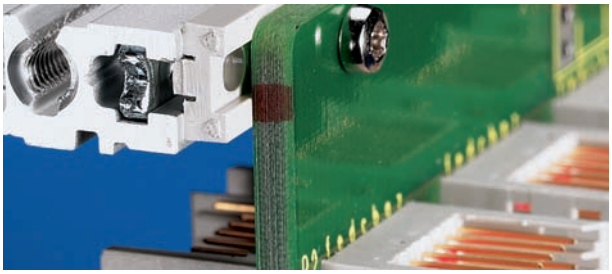

04400001

Rear horizontal rail with insulation strip for backplane mounting

ServicePLUS see page 6.16

Delivery comprises (Kit)

Item	Qty 3 U	Qty 6 U	Description
1	2	2	19" support bracket for **EMC textile gasket**
2	2	2	Corner profile to rear for **EMC textile gasket**
3	2	2	Side panel type H
4	2	2	Front horizontal rail (H-KD)
4 a	2	2	Rear horizontal rail (H-KD)
4 b	2	2	Rear horizontal rail (H-ST) with insulation strip for backplane mounting
4 c	-	1	Centre horizontal rail (ST)
5	6	8	Threaded insert (pre-fitted)
6	2	2	Perforated strip (pre-fitted)
7	2	4	Insulation strip (pre-fitted)
8	2	2	EMC cover plate
9	1	1	EMC gasketing material (pre-fitted)
10	1	1	Rear panel
11	1	1	Assembly kit
12	1	1	User manual

Order Information

Height U	Width HP	Depth D mm	Depth D1 mm	Depth D2 mm	Part no.
3	84	235	175/235	160/220	**24563-172**
3	84	295	175/235/295	160/220/280	**24563-173**
3	84	355	175/235/295	160/220/280	**24563-174**
6	84	235	175/235	160/220	**24563-472**
6	84	295	175/235/295	160/220/280	**24563-473**
6	84	355	175/235/295	160/220/280	**24563-474**
Assembly kit, PU 8 x screw, washer, nut for assembly of subracks in a 19" case or a cabinet					**21100-435**

Guide rails (standard), ESD clip Depth D2 mm	Qty/PU	Part no.
160	10	**24560-351**
220	10	**24560-353**
280	10	**24560-379**
ESD clip for guide rails PU 50 pieces		**24560-255**
Torx panhead screw , for extra bolting of the guide rails, 2.5 × 9.3, zinc-plated, PU 100 pieces		**24560-141**

- Perforated rail for connectors see page 6.33
- Further accessories from page 6.57
- ServicePLUS configuration from page 6.16

Part number in bold face type: ready for despatch within 2 working days
Part number in normal type: ready for despatch within 10 working days

Kit, shielded, for CompactPCI, for backplane mounting, without rear I/O

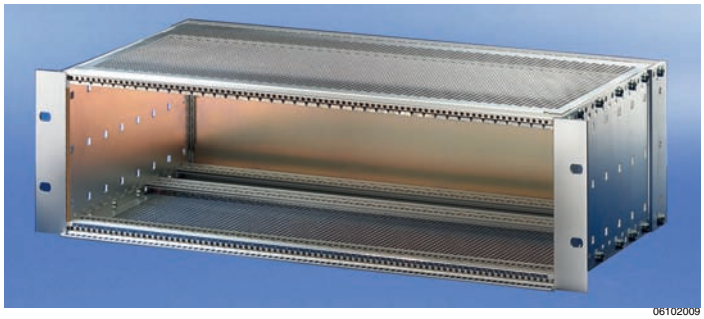

06102009

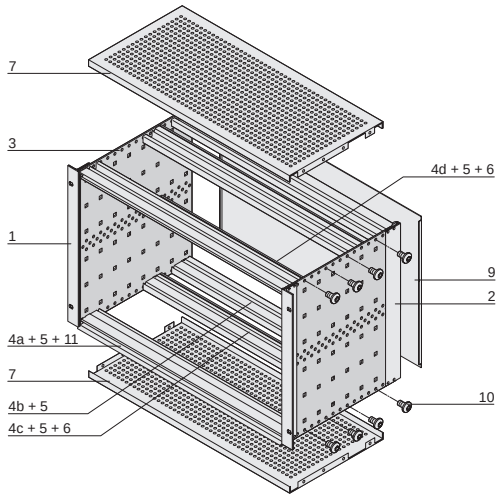

06102078

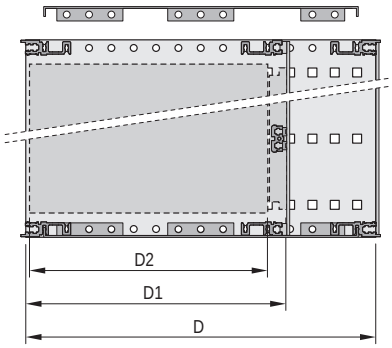

06108060

D=total depth, D1=insertion depth, D2=board depth

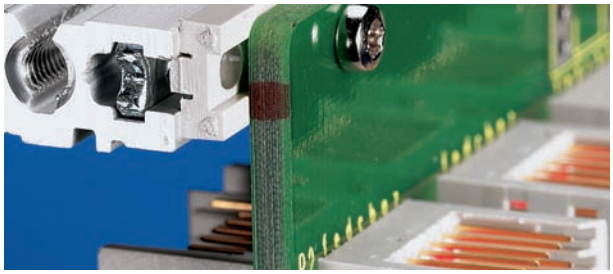

04400001

Rear horizontal rail with insulation strip for backplane mounting

ServicePLUS see page 6.16

- Subrack in robust version ("heavy") for CompactPCI plug-in units with high insertion and withdrawal forces in accordance with IEEE 1101.10 and IEC 60297-3-103
- Rear horizontal rail with insulation strip for backplane mounting
- Typical shielding 40 dB at 1 GHz, 30 dB at 2 GHz (in accordance with VG 95373, part 15), on condition that the front is sealed with shielded front panels

Delivery comprises (kit)

Item	Qty 3 U	Qty 6 U	Description
1	2	2	19" support bracket for **EMC textile gasket**
2	2	2	Corner profile to rear for **EMC textile gasket**
3	2	2	Side panel type F
4	1	-	Front horizontal rail (H-KD)
4 a	1	2	Front horizontal rail IEEE (H-LD)
4 b	2	2	Rear horizontal rail (L-KD)
4 c	2	2	Rear horizontal rail (H-ST) with insulation strip for backplane mounting
4 d	-	1	Centre horizontal rail (ST)
5	6	8	Threaded insert (pre-fitted)
6	2	4	Insulation strip (pre-fitted)
7	2	2	EMC cover plate
8	1	1	EMC gasketing material (pre-fitted)
9	1	1	rear panel
10	1	1	Assembly kit
11	2	2	Perforated strip (pre-fitted in items 4+4a)
12	1	1	User manual

Order Information

Height U	Width HP	Depth D mm	Depth D1 mm	Depth D2 mm	Part no.
3	84	235	175	160	**24563-152**
6	84	235	175	160	**24563-452**
Guide rails with coding, red 160 mm deep, PBT, UL 94 V-0, groove width 2 mm, PU 10 pieces					**24560-356**
Guide rails with coding, grey 160 mm deep, PBT, UL 94 V-0, groove width 2 mm, PU 10 pieces					**24560-358**
Guide rails with coding, green, offset 160 mm deep, PBT, UL 94 V-0, groove width 2 mm, PU 10 pieces					**24560-359**
ESD clip for guide rails PU 50 pieces					**24560-255**
ESD clip for alignment pin of CPCI/VME64x handle PU 50 pieces					**24560-256**
Tory panhead screw 2.5 × 9.3, zinc-plated, PU 100 pieces					**24560-141**
Coding peg PC, UL 94 V-0, RAL 7035, PU 100 pieces					**20817-501**
Assembly set, PU 8 x screw, washer, nut for assembly of subracks in a 19" case or a cabinet					**21100-435**

Note

- If backplanes and connectors have to be assembled, please order perforated rail for connector separately, see page 6.33
- Further accessories from page 6.57
- ServicePLUS configuration from page 6.16

Kit, shielded, for CompactPCI, for backplane mounting, rear I/O

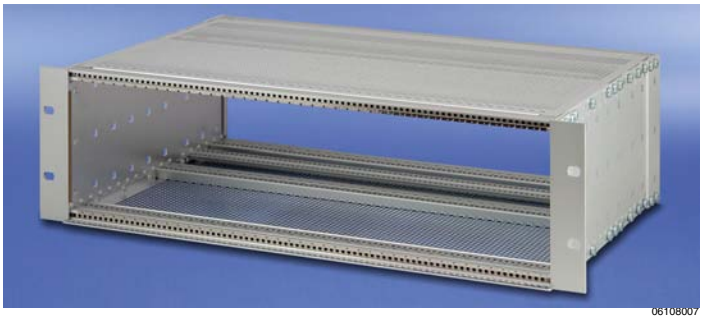

06108007

- Subrack in robust version ("heavy") for CompactPCI plug-in units with high insertion and withdrawal forces in accordance with IEEE 1101.10 and IEC 60297-3-103
- For rear I/O boards (depth 80 mm)
- Rear horizontal rail with insulation strip for backplane mounting
- Typical shielding 40 dB at 1 GHz, 30 dB at 2 GHz (in accordance with VG 95373, part 15), on condition that the front is sealed with shielded front panels

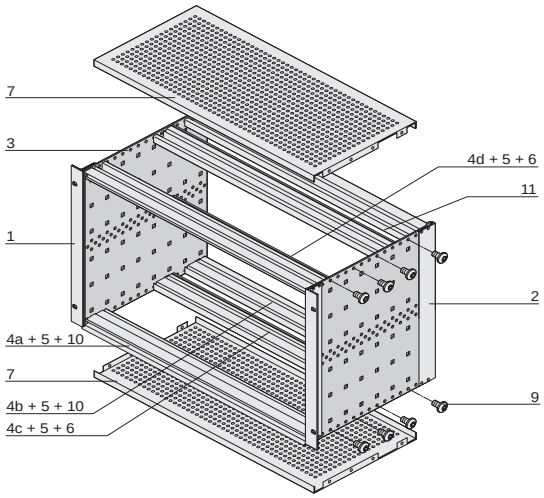

06105076

6 U

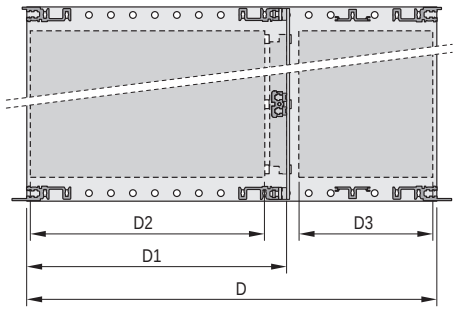

06108075

D=Overall depth, D1=insertion depth, D2=board depth
D3=board depth rear I/O

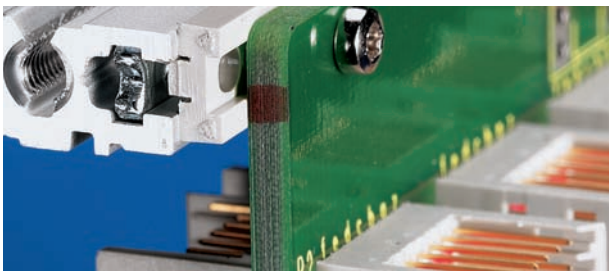

04400001

Rear horizontal rail with insulation strip for backplane mounting

ServicePLUS see page 6.16

Delivery comprises (kit)

Item	Qty 3 U	Qty 6 U	Description
1	2	2	19" support bracket for **EMC textile gasket**
2	2	2	Corner profile to rear for **EMC textile gasket**
3	2	2	Side panel type F
4	1	-	Front horizontal rail (H-KD)
4 a	1	2	Front horizontal rail IEEE (H-LD)
4 b	2	2	Rear horizontal rail (L-KD)
4 c	2	2	Rear horizontal rail (H-ST) with insulation strip for backplane mounting
4 d	-	1	Centre horizontal rail (ST)
5	6	8	Threaded insert (pre-fitted)
6	2	4	Insulation strip, fixed
7	2	2	EMC cover plate
8	1	1	EMC gasketing material (pre-fitted)
9	1	1	Assembly kit
10	2	2	Perforated strip (pre-fitted)
11	2	2	Horizontal rail type AB
12	1	1	User manual

Order Information

Height U	Width HP	Depth D mm	Tiefe D1 mm	Tiefe D2 mm	Tiefe D3 mm	Part no.
3	84	275	175	160	80	**24563-157**
6	84	275	175	160	80	**24563-457**
Torx panhead screw M2.5 × 9.3, zinc-plated, PU 100 pieces						**24560-141**
Coding peg PC, UL 94 V-0, RAL 7035, PU 100 pieces						**20817-501**
Assembly kit, PU 8 x screw, washer, nut for assembly of subracks in a 19" case or a cabinet						**21100-435**

Note

- Please order guide rails and ESD clips separately, see page 6.15
- If backplanes and connectors have to be assembled, please order perforated rail for connector separately, see page 6.33
- Further accessories from page 6.57
- ServicePLUS configuration from page 6.16

Part number in bold face type: ready for despatch within 2 working days
Part number in normal type: ready for despatch within 10 working days

Guide rails with coding for CompactPCI and VME64x

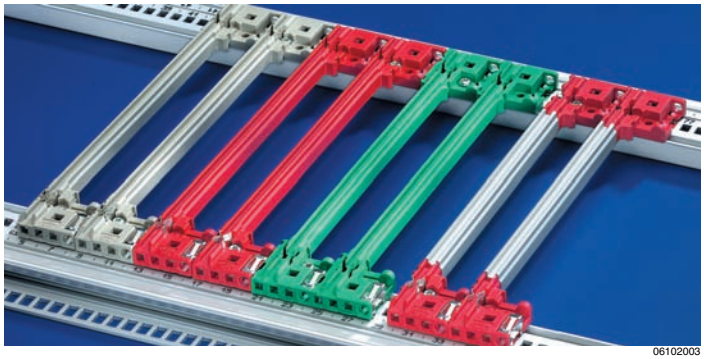

06102003

Guide rails on horizontal rail type H

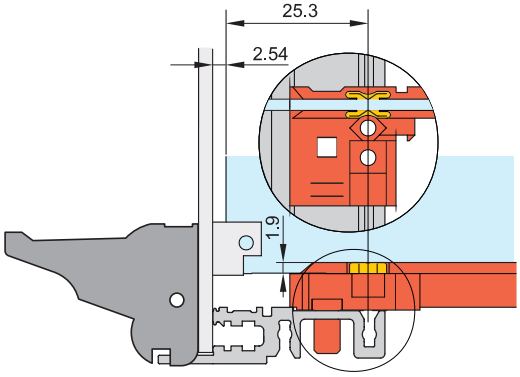

04505050

ESD clip for alignment pin

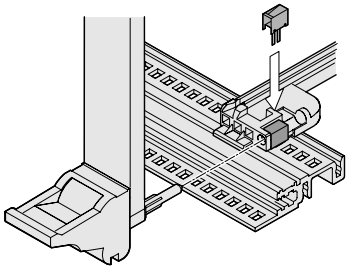

06103052

- The guide rails conform to IEC 60297-3-100 and IEEE 1101.10/11, are 4 HP wide and can be equipped with coding pegs
- Material PBT UL 94 V-0, groove width 2 mm, for board thickness 1.6 mm
- Colour:
  - red (CPU board)
  - grey (periphery board)
  - green (CompactPCI power supply, 0.1" offset)

Order Information

Description	Depth mm	Qty/PU	Part no.
Guide rails with coding, red	70	10	**24560-355**
Guide rails with coding, grey	70	10	**24560-360**
Guide rails with coding, red	160	10	**24560-356**
Guide rails with coding, grey	160	10	**24560-358**
Guide rails with coding, green, offset	160	10	**24560-359**
ESD clip for guide rails PU 50 pieces			**24560-255**
ESD clip for alignment pin of CPCI/VME64x handle PU 50 pieces			**24560-256**
Torx panhead screw 2.5 × 9.3, zinc-plated, PU 100 pieces			**24560-141**
Coding peg PC, UL 94 V-0, RAL 7035, PU 100 pieces			**20817-501**

Note

- Guide rails with a depth of 70 mm are needed for 80 mm deep rear I/O boards
- More guide rails see page 6.34
- IEL/IET handle for CompactPCI/VME64x handles see chapter Sub-assemblies/plug-in units, page 7.18

For further information www.schroff.biz/oneclick
oneClick search code = Part no.

Subracks – *europac PRO* ServicePLUS

configuration

Components can be varied and combined freely

Simple. Fast. To the ideal product.

- Configuration tables from page 6.17
- Online configuration: **www.schroff.co.uk/configuration**

assembly

Fitting of all mechanical, electrical and electronic components by our specialists

Assembled by professionals. Double benefit!

- Professionally and reliable from quantity 1
- Ready for despatch within 5 working days
- Further information: **www.schroff.co.uk/assembly**

modification

Custom drilling, cut-outs and special colours for off-the-shelf products

Small changes. Large impact.

- Customized modifications from 1 piece
- Ready for despatch within 10 working days
- Further information: **www.schroff.co.uk/modification**

solution

Integration and custom developments

Simple. Fast. From one source.

- Special sizes (depth and width)
- Individual thermal concepts
- Ready for despatch within 10 working days
- Further information: **www.schroff.co.uk/solution**

express

Delivery time to customer's request

When fast has to be faster.

- Express logistics
- Further information: **www.schroff.co.uk/express**

academy

Knowledge transfer and partnership

Knowledge. Sharing. Partnerships.

- Seminars, CAD drawings, test reports, user reports
- Further information: **www.schroff.co.uk/academy**

Part number in bold face type: ready for despatch within 2 working days
Part number in normal type: ready for despatch within 10 working days

Overview of individual components for shielded or unshielded subracks

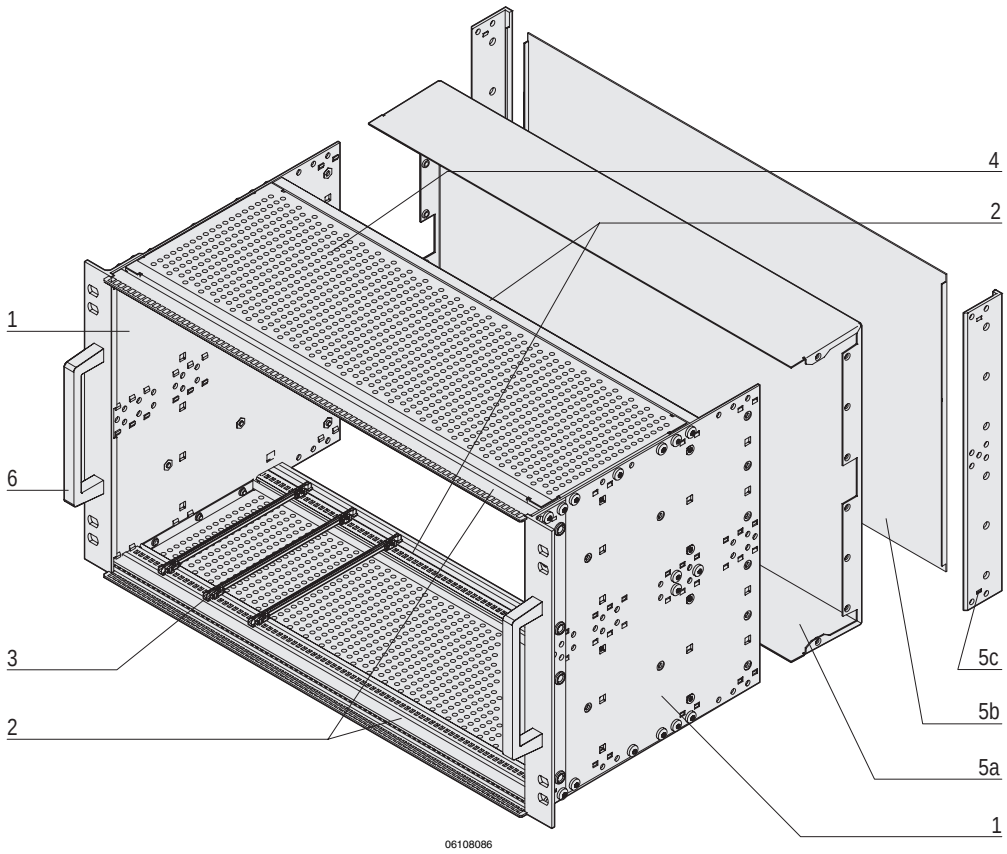

Item	Description	Description	Page
Item 1	Side panel	Establishes the height and depth of the subrack; Al, 2 mm, with universal hole positions for assembly of accessories. In three versions: The "flexible" one with separate 19" brackets as well as two others with integrated 19" brackets for "light" and "heavy" applications.	6.19
Item 2	Horizontal rail	Establishes the width of the subrack; Al extrusion, with defined hole positions for guide rails, grooves for threaded inserts, M4 thread at front, functional rail shapes, basically differing with regard to their mechanical loading capacity: “light“ (load up to 7.5 kg) and “heavy“ (load > 7.5 kg).	6.26
Item 3	Guide rails	Guide rails serve as interface between subracks and boards, for different PCB formats, are from plastic or metal, optionally codable and can, also optionally, be assembled with ESD clips to deflect electrostatic discharge.	6.34
Item 4	Cover plates	Provide mechanical protection and/or EMC shielding and are perforated.	6.42
Item 5	Rear/front	Rear hood (5a) or front panel (5b) with corner profiles (5c) as carriers for EMC seals in combination with use of shielded front panels. Note: Rear hood and corner profile cannot be fitted simultaneously.	6.46
Item 6	Handles	Handles can be mounted on the 19" brackets.	6.25
–	EMC shielding (without illustration)	Extensive component range for specific shielding of subrack according to your application.	6.51
–	Internal mounting (without illustration)	Universal assemblies, e.g. for horizontal and vertical mounting and for mounting plates.	6.57

Subrack dimensions

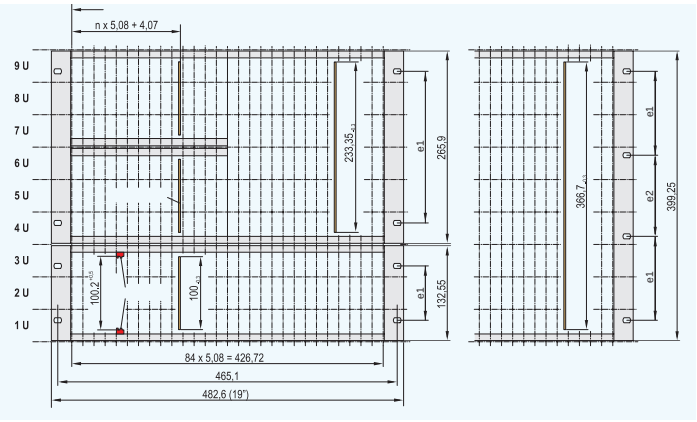

20304051

- Dimensions conform to international standards EC 60297-3-100, IEEE 1101.1/.10/.11; please see the Schroff Standards Summary for details
- Side panels
  - Aluminium, 2 mm
  - Round holes for mounting horizontal rails (depth grid 15 mm)
  - Impressions on the inner side of the side panel act as an anti-rotation guard and aid positioning of the horizontal rails
  - Square holes (6 x 6 mm) provide universal fixing for components such as backplane shielding; version without square holes available on request

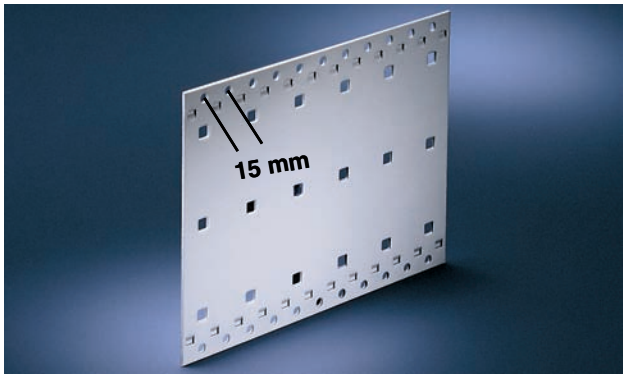

06103001

Description

Depth grid

The depth grid is 15 mm, the mounting holes in the side panel are decisive for the configurability of individual components; thus any combinations of various individual parts are possible

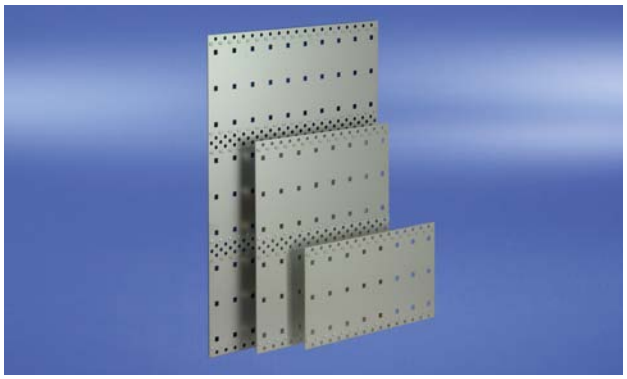

06108008

Side panel 3 U, 6 U and 9 U

3 and 6 U side panels have the same hole positions (the 6 U is a doubling vertically of the 3 U); thus subdivisions can be made in the vertical dimension (6 U: 2 x 3 U; 9 U: 3 x 3 U)

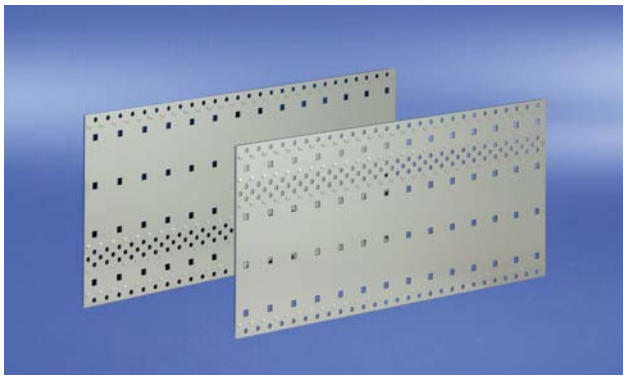

06108011

Side panel 4 U

4 U side panels have the same hole positions as 3 U and additionally 1 U (above or beneath the 3 U installation); this height allows the construction of a 3 U unit with 1 U clearance for cabling or airflow

Part number in bold face type: ready for despatch within 2 working days
Part number in normal type: ready for despatch within 10 working days

Side panels

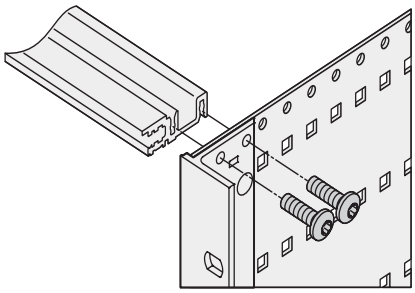

06108062

Side panel - horizontal rail assembly

- Aluminium, 2 mm
- Holes for assembly of horizontal rails (depth grid 15 mm)
- The stampings on the internal surface of the side panels serve as anti-rotation guard and to position the horizontal rails
- Square holes (6 x 6 mm) serve for universal fixture of components like backplane shielding; version without square holes available on request
- Only one type of screw driver is needed for the assembly (Torx panhead screw, M4 x 14; torque side panel - horizontal rail 2.4 Nm; torque side panel - cover plate 1.3 Nm)
- 3 versions of the side panel:
  - **Type F = flexible**
  - **Type H = heavy**
  - **Type L = light**

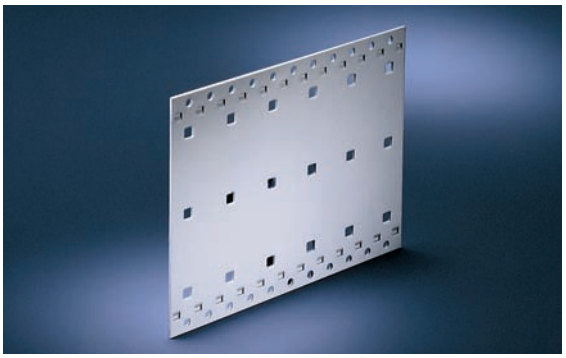

06197003

Type F (flexible)

- Universal version: 19"-bracket (please order separately) can be fitted variably to front, rear or recessed
- Heights: 3, 4, 6 and 9 U
  depths: 175, 235, 275, 277.75, 295, 355, 415 and 475 mm
  other dimensions available on request
- 2 EMC shielding concepts for front/rear side:
  EMC gasketing (stainless steel or textile gaskets)

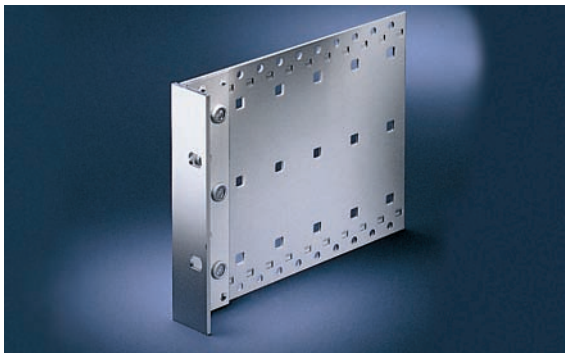

06197004

Type H (heavy)

- 19" bracket Tox-cold welded to side panel; specifically intended for demanding mechanical conditions (vibration resistance; shock and vibration requirements, e.g. IEC 61587-2)
- Heights: 3 and 6 U
  depths: 175, 235, 295 and 355 mm
  other dimensions available on request
- 2 EMC shielding concepts for front/rear side:
  EMC gasketing (stainless steel or textile gaskets)

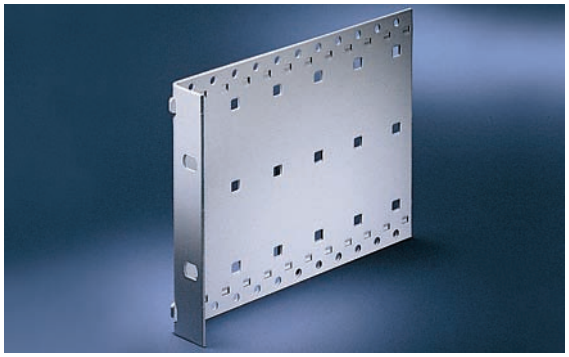

06197002

Type L (light)

- Side panel with formed 19" brackets,
  for standard applications, unshielded
- Particularly cost-effective versions
  (not suited for EMC applications)
- Heights: 3 and 6 U
  depths: 175, 235 and 295 mm
  other dimensions available on request

Type F Side panel type F for stainless steel EMC gasket

Order Information

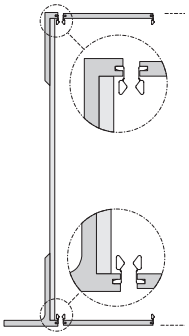

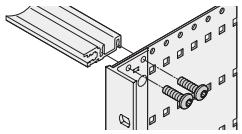

06108070 06108062

Height U	Depth mm		Side panel type F	19" bracket without handle holes	19" bracket with handle holes	19" bracket depth-adjustable	EMC gasket (stainless steel)	Rear angle	Side panel connection
			 06197003	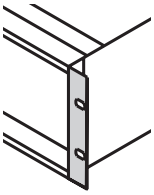 bza45819	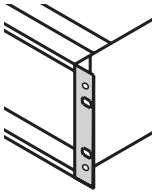 06106050	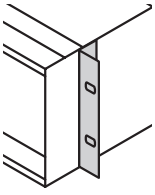 06102501	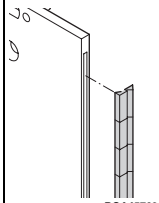 BGA45760	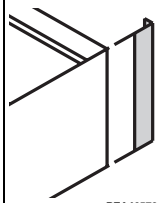 BZA46573	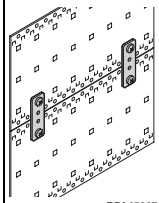 BPA45867
			without 19" bracket, Al, 2 mm, passivated, please order 19“ bracket and corner profile separately	with lateral grooves for EMC stainless steel gasket, Al extrusion, rear side etched, front anodised	with lateral grooves for stainless steel EMC gasket, Al extrusion, rear side etched, front anodised, please order front handles separately, see page 6.25	Al extrusion, passivated	inserted laterally into the slots of the front panel, stainless steel	Al extrusion, surface clear passivated; with lateral grooves for EMC stainless steel gasekt; rear hood cannot be mounted simultaneously	Zn die-cast, incl. assembly kit, for linking two by two side panels (above one another)
			1 piece	PU 1 pair	PU 1 pair	PU 1 pair	PU 10 pieces	PU 1 pair	PU 4 pieces
3	175		**34560-185**	**24560-197**	**24560-198**	**24560-199**	**21101-705**	**24561-198**	**21101-954**
3	235		**34560-187**						
3	275	1)	**34579-300**						
3	277.75	2)	**34579-002**						
3	295		**34560-189**						
3	355		**34560-191**						
3	415		**34560-193**						
3	475		**34560-195**						
4	175	3)	**34560-285**	**24560-297**	**24560-298**	**24560-299**	**21101-713**	**24561-298**	**21101-954**
4	235	3)	**34560-287**						
4	295	3)	**34560-289**						
4	355	3)	**34560-291**						
4	415	3)	**34560-293**						
4	475	3)	**34560-295**						
6	175		**34560-485**	**24560-497**	**24560-498**	**24560-499**	**21101-707**	**24561-498**	**21101-954**
6	235		**34560-487**						
6	275	1)	**34579-038**						
6	277.75	2)	**34579-012**						
6	295		**34560-489**						
6	355		**34560-491**						
6	415		**34560-493**						
6	475		**34560-495**						
6	970		**34560-496**						
9	175		**34560-785**	**24560-797**	**24560-798**	**24560-799**	**21101-709**	**24561-798**	**21101-954**
9	235		**34560-787**						
9	295		**34560-789**						
9	355		**34560-791**						
9	415		**34560-793**						
Screw, M4 x 14, PU 100 pieces for assembly of horizontal rails on side panels			**24560-130**	**24560-130**	**24560-130**	**24560-130**	–	**24560-130**	–

1) CompactPCI 2) VME64x 3) Grid holes of side panel 3 + 1 U

■ View of side panels 3, 4, 6, 9 U see page 6.18

Part number in bold face type: ready for despatch within 2 working days
Part number in normal type: ready for despatch within 10 working days

Type F Side panels type F for textile EMC gasket

Order Information

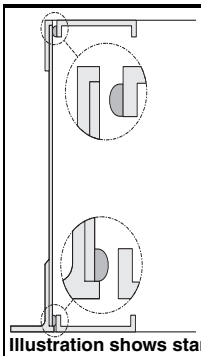

Illustration shows standard assembly, not VME or CompactPCI bus with rear I/O

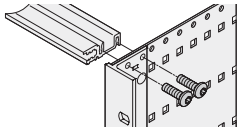

06108054 0610862

Height U	Depth mm		Side panel type F	19" bracket without handle holes	19" bracket with handle holes	19" bracket depth-adjustable	EMC gasket (textile)	Rear angle	Side panel connection
			 06197003	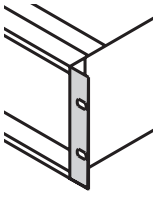 bza45819	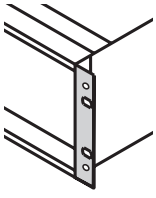 06106050	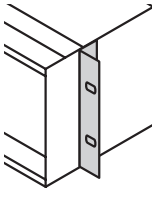 06102501	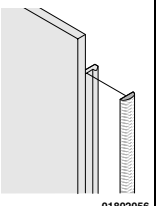 01802056	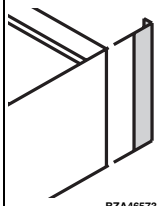 BZA46573	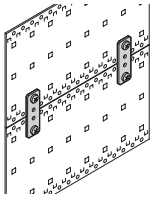 BPA45867
			without 19" bracket, Al, 2 mm, passivated, please order 19" bracket and corner profile separately	Al extrusion for EMC textile gasket, rear side etched, front anodised	Al extrusion for EMC textile gasket, rear side etched, front anodised, please order front handles separately, see page 6.25	Al extrusion, passivated	textile gasket, core: foam, sleeve: textile cladding with CuNi coating, UL 94 V-0, temperature range -40 ... 70 °C	Al extrusion, etched; for EMC textile gasket	Zn die-cast, incl. assembly kit, for linking two by two side panels (above one another)
			1 piece	PU 1 pair	PU 1 pair	PU 1 pair	PU 10 pieces	PU 1 pair	PU 4 pieces
3	175		**34560-185**	**24564-197**	**24564-198**	**24560-199**	**21101-853**	**24564-199**	**21101-954**
3	235		**34560-187**						
3	275	1)	**34579-300**						
3	277.75	2)	**34579-002**						
3	295		**34560-189**						
3	355		**34560-191**						
3	415		**34560-193**						
3	475		**34560-195**						
4	175	3)	**34560-285**	**24564-297**	**24564-298**	**24560-299**	**21101-858**	**24564-299**	**21101-954**
4	235	3)	**34560-287**						
4	295	3)	**34560-289**						
4	355	3)	**34560-291**						
4	415	3)	**34560-293**						
4	475	3)	**34560-295**						
6	175		**34560-485**	**24564-497**	**24564-498**	**24560-499**	**21101-855**	**24564-499**	**21101-954**
6	235		**34560-487**						
6	275	1)	**34579-038**						
6	277.75	2)	**34579-012**						
6	295		**34560-489**						
6	355		**34560-491**						
6	415		**34560-493**						
6	475		**34560-495**						
6	970		**34560-496**						
9	175		**34560-785**	**24564-797**	**24564-798**	**24560-799**	**21101-859**	**24564-799**	**21101-954**
9	235		**34560-787**						
9	295		**34560-789**						
9	355		**34560-791**						
9	415		**34560-793**						
Screw, M4 x 14, PU 100 pieces for assembly of horizontal rails on side panels			**24560-130**	**24560-130**	**24560-130**	**24560-130**	–	**24560-130**	–

1) CompactPCI 2) VME64x 3) Grid holes of side panel 3 + 1 U

Type H Side panels type H for stainless steel EMC gasket

Order Information

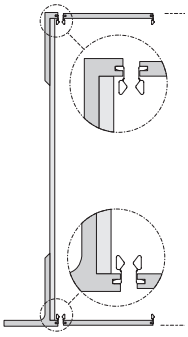 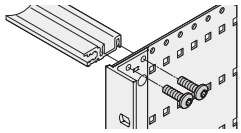 06108070 06108062	Side panel type H for EMC gasket			Rear angle	Side panel connection
	without handle holes	with handle holes	EMC gasket (stainless steel)		
	 06107001	 06107001	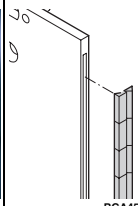 BGA45760	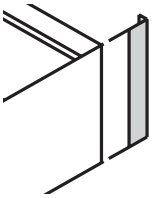 BZA46573	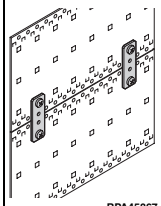 BPA45867
	for high mechanical demands, 19" bracket Tox-cold welded, Al, 2 mm, clear passivated, front anodised	for high mechanical demands, 19" bracket Tox-cold welded, Al, 2 mm, passivated, front anodised, please order front handles separately see page 6.25	inserted laterally into the slots of the front panel	Al extrusion, surface clear passivated; with lateral grooves for EMC stainless steel gasekt; rear hood cannot be mounted simultaneously	Zn die-cast, incl. assembly kit, for linking two by two side panels (above one another)
Height U	**Depth mm**	**PU 1 pair**	**PU 1 pair**	**PU 10 pieces**	**PU 1 pair**	**PU 4 pieces**
3	175	**24566-125**	**24567-125**			
3	235	**24566-127**	**24567-127**			
3	275 1)	–	–			
3	277.75 2)	–	–	**21101-705**	**24561-198**	**21101-954**
3	295	**24566-129**	**24567-129**			
3	355	**24566-131**	**24567-131**			
3	415	–	–			
3	475	–	–			
4	175 3)					
4	235 3)					
4	295 3)					
4	355 3)	–	–	–	–	–
4	415 3)					
4	475 3)					
6	175	**24566-425**	**24567-425**			
6	235	**24566-427**	**24567-427**			
6	275 1)	–	–			
6	277.75 2)	–	–			
6	295	**24566-429**	**24567-429**	**21101-707**	**24561-498**	**21101-954**
6	355	**24566-431**	**24567-431**			
6	415	–	–			
6	475	–	–			
6	970	–	–			
9	175					
9	235					
9	295	–	–	–	–	–
9	355					
9	415					
Screw, M4 x 14, PU 100 pieces for assembly of horizontal rails on side panels		**24560-130**	**24560-130**	–	**24560-130**	–

1) CompactPCI 2) VME64x 3) Grid holes of side panel 3 + 1 U

Part number in bold face type: ready for despatch within 2 working days
Part number in normal type: ready for despatch within 10 working days

Type H Side panels type H for textile EMC gasket

Order Information

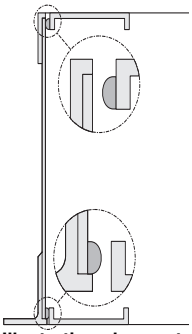

Illustration shows standard assembly, not VME or CompactPCI bus with rear I/O

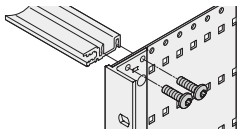

06108054 0610862

Height	Depth		Side panel type H without handle holes	Side panel type H with handle holes	Side panel type H EMC gasket (textile)	Rear angle	Side panel connection
			 06107001	 06107001	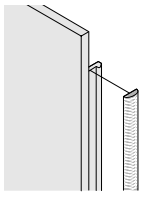 01802056	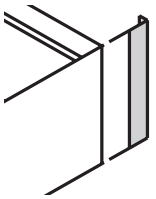 BZA46573	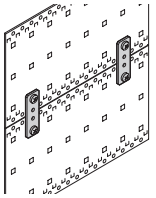 BPA45867
			for high mechanical demands, 19" bracket Tox-cold welded, Al, 2 mm, clear passivated, front anodised	for high mechanical demands, 19" bracket Tox-cold welded, Al, 2 mm, passivated, front anodised, please order front handles separately see page 6.25	textile gasket, core: foam, sleeve: textile cladding with CuNi coating, UL 94 V-0, temperature range -40 ... 70 °C	Al extrusion, etched; for EMC textile gasket	Zn die-cast, incl. assembly kit, for linking two by two side panels (above one another)
U	mm		PU 1 pair	PU 1 pair	PU 10 pieces	PU 1 pair	PU 4 pieces
3	175		**24564-145**	**24566-145**	**21101-853**	**24564-199**	**21101-954**
3	235		**24564-147**	**24566-147**			
3	275	1)	–	–			
3	277.75	2)	–	–			
3	295		**24564-149**	**24566-149**			
3	355		**24564-151**	**24566-151**			
3	415		–	–			
3	475		–	–			
4	175	3)	–	–	–	–	–
4	235	3)					
4	295	3)					
4	355	3)					
4	415	3)					
4	475	3)					
6	175		**24564-445**	**24566-445**	**21101-855**	**24564-499**	**21101-954**
6	235		**24564-447**	**24566-447**			
6	275	1)	–	–			
6	277.75	2)	–	–			
6	295		**24564-449**	**24566-449**			
6	355		**24564-451**	**24566-451**			
6	415		–	–			
6	475		–	–			
6	970		–	–			
9	175		–	–	–	–	–
9	235						
9	295						
9	355						
9	415						
Screw, M4 x 14, PU 100 pieces for assembly of horizontal rails on side panels			**24560-130**	**24560-130**	–	**24560-130**	–

1) CompactPCI 2) VME64x 3) Grid holes of side panel 3 + 1 U

Type L Side panels type L

Order Information

			Side panel type L	Front cover	Collar screw with slot for assembly of front cover	Sleeves for assembly of front cover	Side panel connection
			 06197002	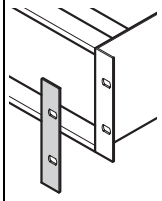 BZA45810	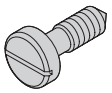 06708055	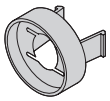 00508056	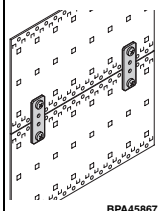 BPA45867
			Al, 2 mm, passivated	for decorative finish of 19" bracket, Al, 2 mm, anodised	M6 x 16, St, nickel-plated	PPE, black	Zn die-cast, incl. assembly kit, for linking two by two side panels (above one another)
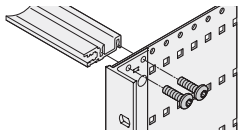 0610862							
Height U	**Depth mm**		**1 piece**	**1 piece**	**PU 100 pieces**	**PU 100 pieces**	**PU 4 pieces**
3	175		**34561-185**	**34561-197**	**21100-565**	**21100-566**	**21101-954**
3	235		**34561-187**				
3	275	1)	–				
3	277.75	2)	–				
3	295		**34561-189**				
3	355		–				
3	415		–				
3	475		–				
4	175	3)	–	–	–	–	–
4	235	3)					
4	295	3)					
4	355	3)					
4	415	3)					
4	475	3)					
6	175		**34561-485**	**34561-497**	**21100-565**	**21100-566**	**21101-954**
6	235		**34561-487**				
6	275	1)	–				
6	277.75	2)	–				
6	295		**34561-489**				
6	355		–				
6	415		–				
6	475		–				
6	970		–				
9	175		–	–	–	–	–
9	235						
9	295						
9	355						
9	415						
Screw, M4 x 14, PU 100 pieces for assembly of horizontal rails on side panels			**24560-130**	–	–	–	–

1) CompactPCI 2) VME64x 3) Grid holes of side panel 3 + 1 U

Part number in bold face type: ready for despatch within 2 working days
Part number in normal type: ready for despatch within 10 working days

Front handles, wall-mounting bracket

Order Information

Height U	Depth mm	X mm	Front handle clear anodised 1 piece (SPQ 10)[1]	Front handle black anodised 1 piece (SPQ 10)[1]	Universal front handle 1 piece (SPQ 10)[1]	Wall-mounting bracket PU 1 pair
			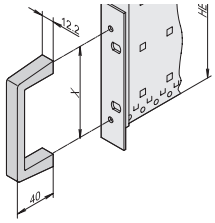 BZA42327		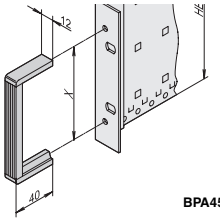 BPA45855 3 parts: Al extrusion, anodised, 2 end pieces, plastic, PA, black width 12 mm, depth 40 mm	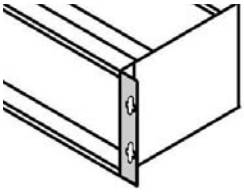 06104063 Screw fixed on the subrack instead of the 19" bracket, Al, 2.5 mm, passivated
3	175	88.0	**10501-005**	**10501-026**	**10502-057**	**24562-197**
3	235	88.0				
3	275	88.0				
3	277.75	88.0				
3	295	88.0				
3	355	88.0				
3	415	88.0				
3	475	88.0				
4	175	133.4	**10501-018**	–	**10502-059**	**24562-297**
4	235	133.4				
4	295	133.4				
4	355	133.4				
4	415	133.4				
4	475	133.4				
6	175	235.0	**10501-008**	**10501-029**	**10502-065**	**24562-497**
6	235	235.0				
6	275	235.0				
6	277.75	235.0				
6	295	235.0				
6	355	235.0				
6	415	235.0				
6	475	235.0				
6	970	235.0				
9	175	235.0	**10501-008**	**10501-029**	**10502-065**	**24562-797**
9	235	235.0				
9	295	235.0				
9	355	235.0				
9	415	235.0				
Screw M5 x 12, PU 100 pieces			**24560-183**	**24560-183**	**24560-183**	–
Screw M5 x 12, PU 4 pieces			**24560-182**	**24560-182**	**24560-182**	–
Screw, M4 x 14, PU 100 pieces			–	–	–	**24560-130**

1) SPQ (standard pack quantity): Order number includes 1 piece, but delivery is exclusively made in standard pack quantity (SPQ); please order at least the SPQ quantity or a multiple

Front horizontal rail ("light", "heavy")

Assembly 3 U, 2 x 3 U, 6 U

3 U/6 U

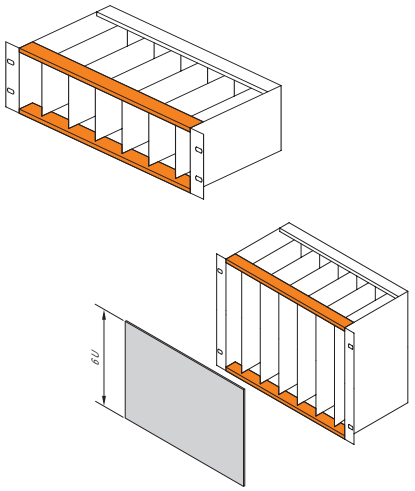

bza44980 bza44974

"light" (L)

Short lip

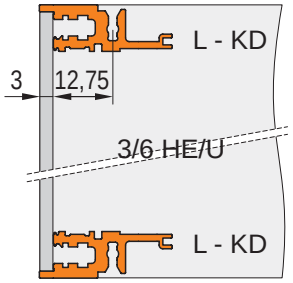

06105060

"heavy" (H)

Short lip

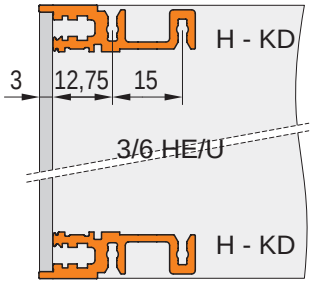

06105061

"heavy" (H)

Long lip

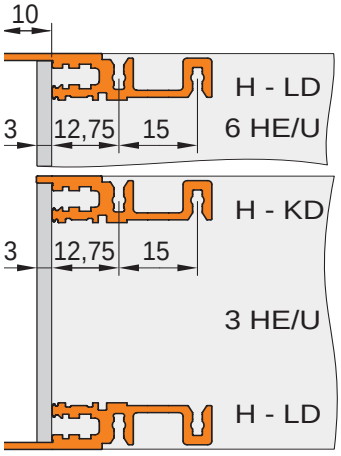

06108063

2 x 3 U

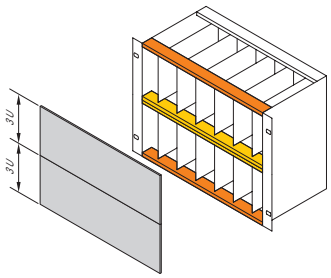

bza44972

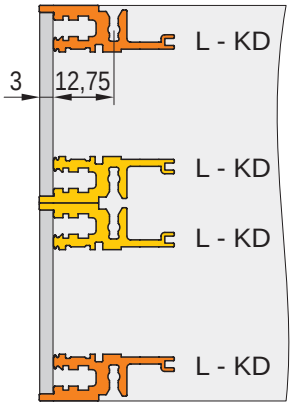

06105062

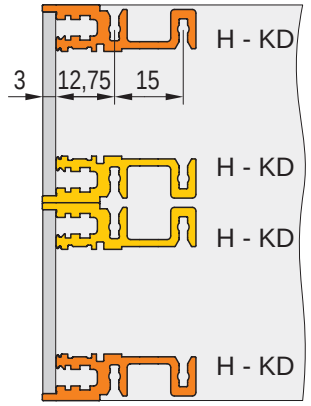

06105063

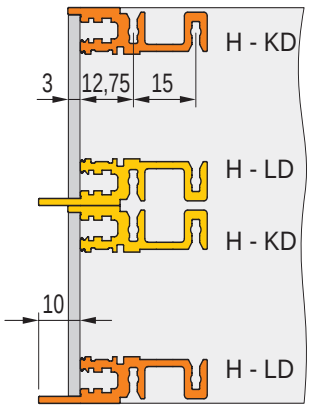

06108064

2 x 3 U, 6 U

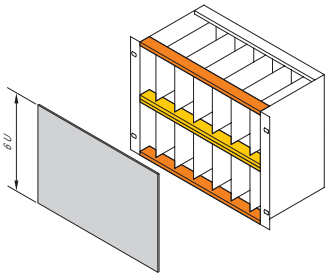

06105059

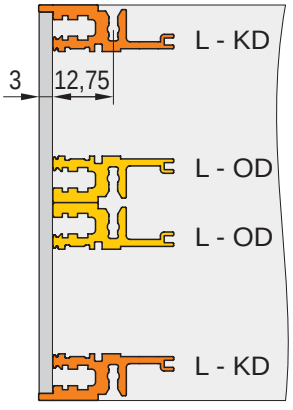

06105064

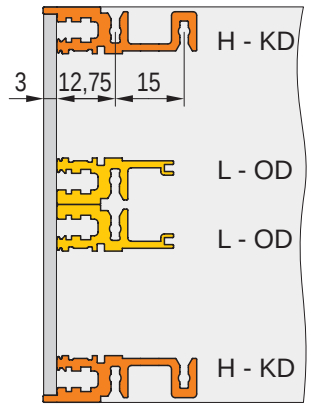

06105065

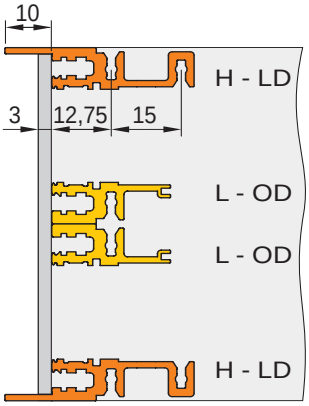

06108065

L-OD = Light - without lip, L-KD = Light - short lip, H-KD = Heavy - short lip, H-LD = Heavy - long lip

Part number in bold face type: ready for despatch within 2 working days
Part number in normal type: ready for despatch within 10 working days

Front horizontal rails

Order Information

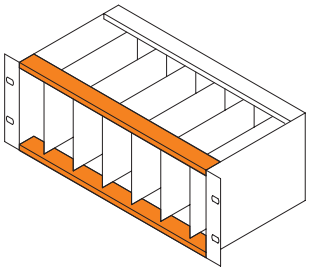 bza44980	"light" Type L-OD without lip  06197006	"light" Type L-KD short lip  06197007	"heavy" Type H-KD short lip  06197008	With long lip to prise out/ in CompactPCI, VME64x boards "heavy" Type H-LD long lip  06197009
with HP markings from 28 HP, Al extrusion, anodised finish, conductive surface	Al extrusion, surface anodised, conductive contact surface	Al extrusion, surface anodised, conductive contact surface	Al extrusion, surface anodised, conductive contact surface	Al extrusion, surface anodised, conductive contact surface
Usable length HP / **Length mm**	**1 piece (SPQ 10)[1)]**	**1 piece (SPQ 10)[1)]**	**1 piece (SPQ 10)[1)]**	**1 piece (SPQ 10)[1)]**
20 / 106.68	**34560-020**	**34560-120**	**34560-220**	**34560-320**
28 / 147.32	**34560-028**	**34560-128**	**34560-228**	**34560-328**
40 / 208.28	**34560-040**	**34560-140**	**34560-240**	**34560-340**
42 / 218.44	**34560-042**	**34560-142**	**34560-242**	**34560-342**
63 / 325.12	**34560-063**	**34560-163**	**34560-263**	**34560-363**
84 / 431.80	**34560-084**	**34560-184**	**34560-284**	**34560-384**
– / 1000	**34560-001**	**34560-101**	**34560-201**	**34560-301**
Screw, M4 x 14, PU 100 pieces	**24560-130**	**24560-130**	**24560-130**	**24560-130**
Bolt, M4 x 10, required if guide rails are screwed to slot 1, PU 100 pieces	–	–	**24560-155**	**24560-155**
Threaded inserts see page	6.32	6.32	6.32	6.32

1) SPQ (standard pack quantity): Order number includes 1 piece, but delivery is exclusively made in standard pack quantity (SPQ); please order at least the SPQ quantity or a multiple
"light": loading capacity up to approx. 7.5 kg; "heavy": loading capacity L 7.5 kg

Note

- 1000 mm version without M4 thread to front, without print and notch for 19" bracket

Rear horizontal rail ("light", "heavy")

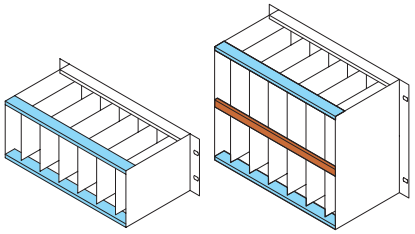

Indirect backplane mounting (with insulation strips)

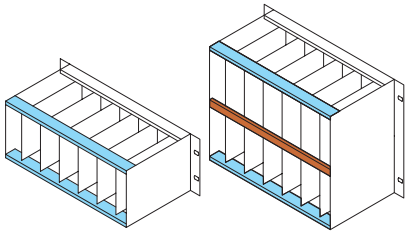

Direct backplane mounting

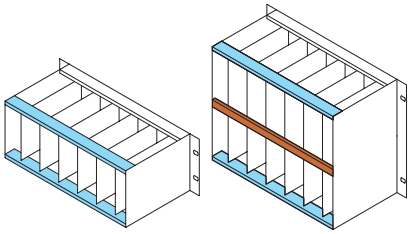

06105074 bza44981

Connector fitting with Z

"light"

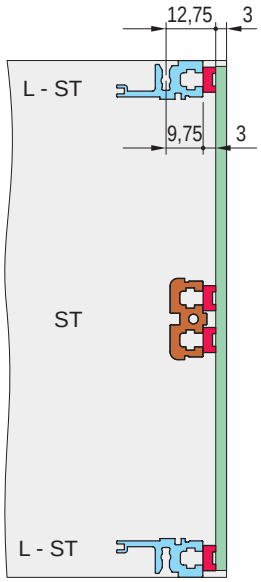

06105072

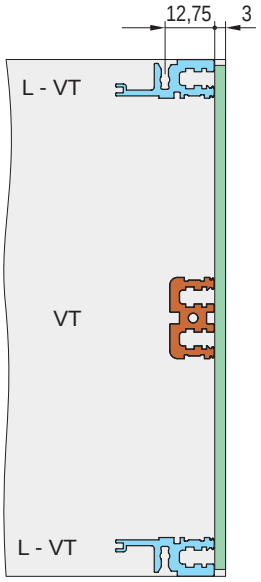

06105073

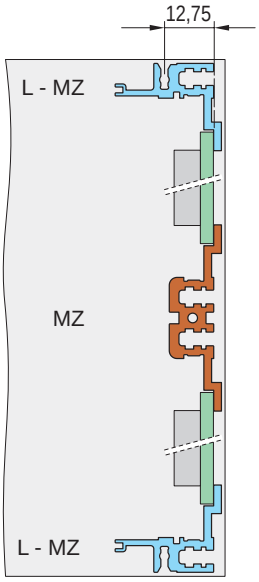

06105071

"heavy"

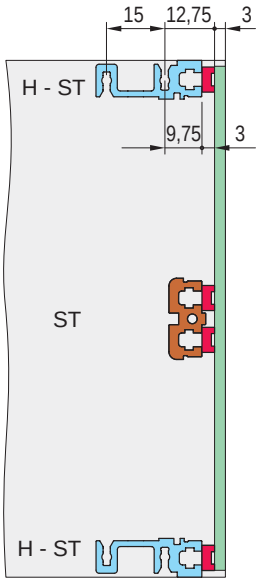

06108066

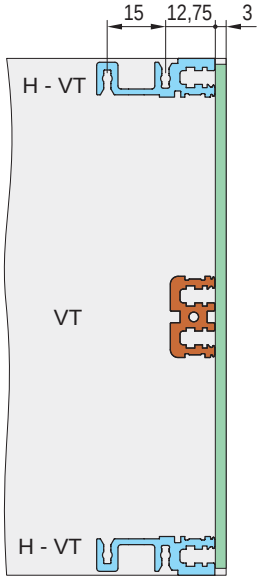

06108067

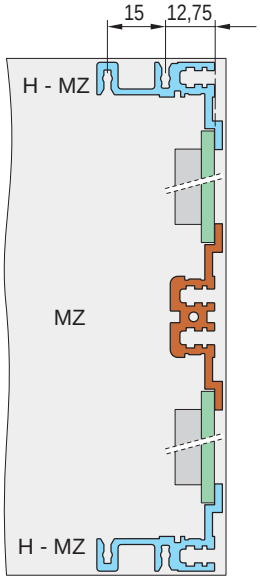

06108068

ST = standard, L = "light", H = "heavy"

VT = recessed, L = light, H = "heavy"

WZ = with z-rail, L = light, H = "heavy"

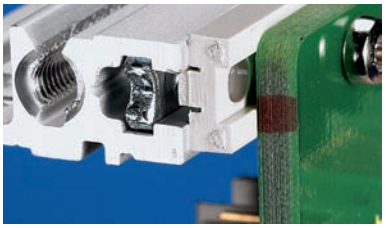

04400001

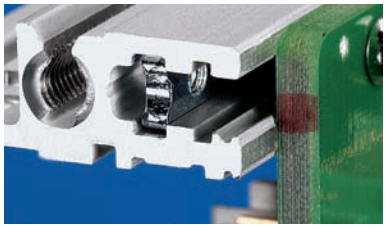

04400002



04400003

Part number in bold face type: ready for despatch within 2 working days
Part number in normal type: ready for despatch within 10 working days

Rear horizontal rails

Order Information

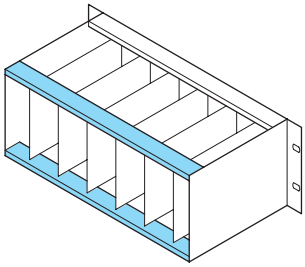

06105074

With HP markings from 28 HP, Al extrusion, anodised finish, conductive surface

		For indirect backplane mounting, with insulation strip		For indirect backplane mounting		For direct mounting of connectors to EN 60603-2 (DIN 41612)	
		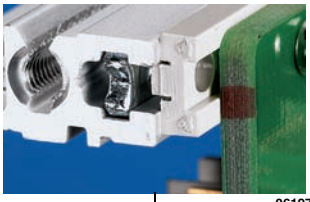 06197011		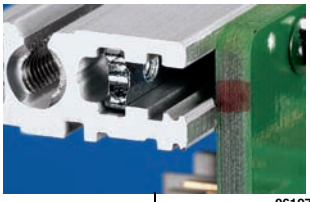 06197011		 06197011	
		"light" Type L-ST standard	"heavy" Type H-ST standard	"light" Type L-VT + 3 mm	"heavy" Type H-VT + 3 mm	"light" Type L-MZ with Z-rail	"heavy" Type H-MZ with Z-rail
		 06197010	 06197011	 BZA45782	 06197009	 06197014	 06197015
		Al extrusion, surface anodised, conductive contact surface	Al extrusion, surface anodised, conductive contact surface	Al extrusion, surface anodised, conductive contact surface	Al extrusion, surface anodised, conductive contact surface	Al extrusion, surface anodised, conductive contact surface	Al extrusion, surface anodised, conductive contact surface
Usable length HP	**Length mm**	**1 piece (SPQ 10)[1)]**	**1 piece (SPQ 10)[1)]**	**1 piece (SPQ 10)[1)]**	**1 piece (SPQ 10)[1)]**	**1 piece (SPQ 10)[1)]**	**1 piece (SPQ 10)[1)]**
20	106.68	**34560-420**	**34560-520**	**34560-620**	**34560-720**	**34560-820**	**34560-920**
28	147.32	**34560-428**	**34560-528**	**34560-628**	**34560-728**	**34560-828**	**34560-928**
40	208.28	**34560-440**	**34560-540**	**34560-640**	**34560-740**	**34560-840**	**34560-940**
42	218.44	**34560-442**	**34560-542**	**34560-642**	**34560-742**	**34560-842**	**34560-942**
63	325.12	**34560-463**	**34560-563**	**34560-663**	**34560-763**	**34560-863**	**34560-963**
84	431.80	**34560-484**	**34560-584**	**34560-684**	**34560-784**	**34560-884**	**34560-984**
–	1000	**34560-401**	**34560-501**	**34560-601**	**34560-701**	**34560-801**	–
Screw, M4 x 14, PU 100 pieces, for assembly of horizontal rails on side panels		**24560-130**	**24560-130**	**24560-130**	**24560-130**	**24560-130**	**24560-130**
Bolt, M4 x 10, required if guide rails are screwed to slot 1, PU 100 pieces		–	**24560-155**	–	**24560-155**	–	**24560-155**
Perforated rail for connector mounting with insulation strip see page		6.33	6.33	–	–	–	–
Z-rail for connector mounting without insulation strip see page		6.33	6.33	–	–	–	–
Insulation strips see page		–	–	6.32	6.32	–	–
Threaded inserts see page		6.32	6.32	6.32	6.32	6.32	6.32

1) SPQ (standard pack quantity): Order number includes 1 piece, but delivery is exclusively made in standard pack quantity (SPQ); please order at least the SPQ quantity or a multiple
"light": loading capacity up to approx. 7.5 kg; "heavy": loading capacity L 7.5 kg

Note

■ 1000 mm version without M4 thread in end without print

Horizontal rails rear, middle

Order Information

	For indirect backplane mounting, with insulation strip	For direct backplane mounting	For direct mounting of connectors in accordance with EN 60603-2 (DIN 41612)
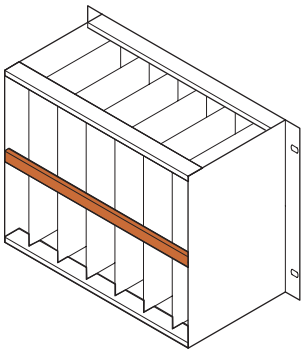 06108090	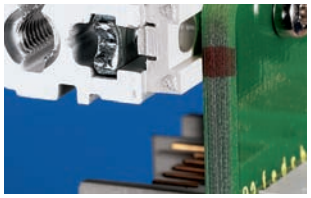 06197016	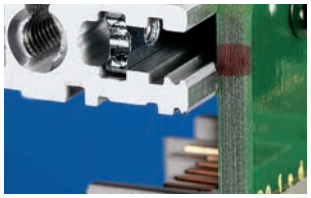 06197017	 06197018
	Type ST	**Type VT**	**Type MZ**
	 06197016	 06197017	 06197018
	Al extrusion, finish anodised, conductive contact surface; without marking	Al extrusion, finish anodised, conductive contact surface; without marking	Al extrusion, finish anodised, conductive contact surface; without marking
Usable length HP / **Length mm**	**1 piece (SPQ 10)[1)]**	**1 piece (SPQ 10)[1)]**	**1 piece (SPQ 10)[1)]**
20 / 106.68	**34561-020**	**34561-120**	**34561-220**
28 / 147.32	**34561-028**	**34561-128**	**34561-228**
40 / 208.28	**34561-040**	**34561-140**	**34561-240**
42 / 218.44	**34561-042**	**34561-142**	**34561-242**
63 / 325.12	**34561-063**	**34561-163**	**34561-263**
84 / 431.80	**34561-084**	**34561-184**	**34561-284**
– / 1000	**34561-001**	**34561-101**	**34561-201**
Screw, M4 x 14, PU 100 pieces, for assembly of horizontal rails on side panels	**24560-130**	**24560-130**	**24560-130**
Insulation strips see page	6.32	–	–
Threaded inserts see page	6.32	6.32	6.32

1) SPQ (standard pack quantity): Order number includes 1 piece, but delivery is exclusively made in standard pack quantity (SPQ); please order at least the SPQ quantity or a multiple
"light": loading capacity up to approx. 7.5 kg; "heavy": loading capacity L 7.5 kg

Note

- All horizontal rails without print
- 1000 mm version without M4 thread in end

Part number in bold face type: ready for despatch within 2 working days
Part number in normal type: ready for despatch within 10 working days

Horizontal rails (type AB) for rear I/O guide rails

Order Information

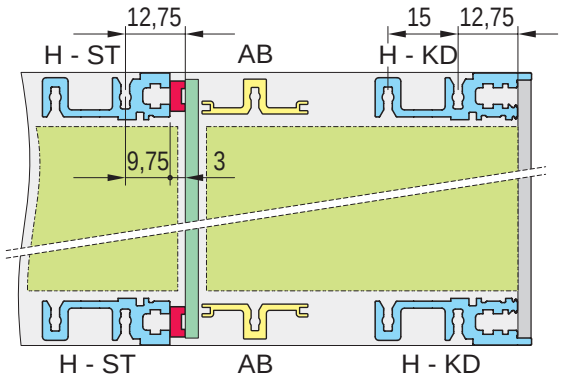

06108069

For CompactPCI in rear I/O area



06108009

Type AB



06197009

Al extrusion, finish anodised, conductive contact surface; horizontal rail type AB (AB = bracing) is required to fix the guide rails for the 80 mm rear I/O boards without marking

Usable length HP	Length mm	1 piece (SPQ 10)[1)]
20	106.68	**34561-520**
28	147.32	**34561-528**
40	208.28	**34561-540**
42	218.44	**34561-542**
63	325.12	**34561-563**
84	431.80	**34561-584**
–	1000	**34561-501**
Screw, M4 x 14, PU 100 pieces, for assembly of horizontal rails on side panels		**24560-130**

1) SPQ (standard pack quantity): Order number includes 1 piece, but delivery is exclusively made in standard pack quantity (SPQ); please order at least the SPQ quantity or a multiple
"light": loading capacity up to approx. 7.5 kg; "heavy": loading capacity L 7.5 kg

Note

- All horizontal rails without print
- 1000 mm version without M4 thread in end

Threaded inserts, perforated strips, insulation strips

Order Information

	Threaded insert			Perforated strip		Insulation strip	
	M2.5	M3		(item 1)			
	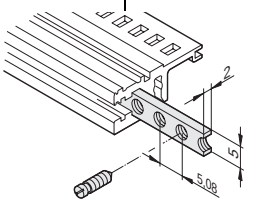 06103056			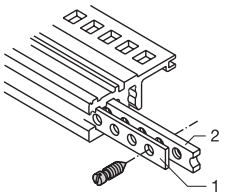 BZA45853		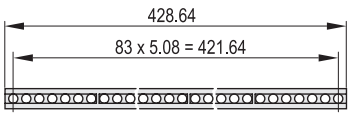 BZ6749	
	required for assembly of front panel on horizontal rail; please use collar screw 12.3 mm, see page 6.68			for centring of shielded plug-in units, Al, 1 mm, please order grub screw for fixing separately		for insulated assembly of backplane	
	Threaded insert			**Perforated strip**		**Insulation strip**	
Usable length HP	**Length mm**	**1 piece (SPQ 10)[1)]**	**1 piece (SPQ 10)[1)]**	**Length mm**	**1 piece (SPQ 10)[1)]**	**Length mm**	**PU 10 pieces**
20	106.68	**34561-320**	–	106.48	**30845-189**	101.50	**24560-820**
28	147.32	**34561-328**	–	147.12	**30845-197**	144.20	**24560-828**
40	208.28	**34561-340**	–	208.08	**30845-209**	205.12	**24560-840**
42	218.44	**34561-342**	–	218.24	**30845-211**	210.40	**24560-842**
63	325.12	**34561-363**	–	324.92	**30845-232**	316.88	**24560-863**
84	431.80	**34561-384**	**34561-484**	431.60	**30845-253**	428.64	**24560-884**
196	1000.00	**34565-196**	–	1000.00	**34565-396**		–
Grub screw M2.5 x 8, PU 100 pieces		**21100-276**	–		–		–
Grub screw M2.5 x 9, PU 100 pieces		–	–		**21101-359**		–
Grub screw M3 x 8, PU 100 pieces		–	**21100-646**		–		–

1) SPQ (standard pack quantity): Order number includes 1 piece, but delivery is exclusively made in standard pack quantity (SPQ); please order at least the SPQ quantity or a multiple

2) Order no. includes one packing unit (PU); delivery is exclusively made in PU

Part number in bold face type: ready for despatch within 2 working days
Part number in normal type: ready for despatch within 10 working days

Z-rails, perforated rails

Order Information

		Z-rail for connectors		Perforated rail
		IEC 60603-2 DIN EN 41612 item 1	31-pin, DIN 41617	EN 60603-2, DIN 41612 item 1
		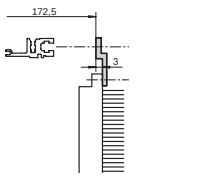 BZA45849 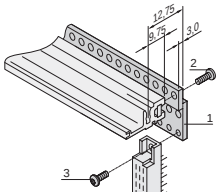 06708063	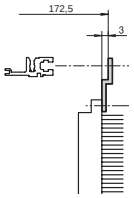 BZA45850	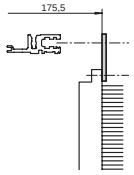 BZA45848 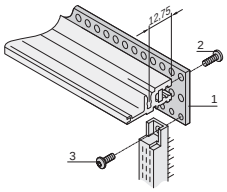 06708051
		for connector mounting with ST horizontal rails, please order threaded insert and screw separately	for connector mounting with ST horizontal rails, please order threaded insert and screw separately	for connector mounting with VT horizontal rails, please order threaded insert and screw separately
Usable length HP	**Length mm**	**1 piece**	**1 piece**	**PU 4 pieces**
20	106.68	**30822-025**	–	**20822-051**
28	142.24	**30822-033**	–	**20822-049**
40	203.20	**30822-045**	**30819-763**	**20822-046**
42	213.36	**30822-047**	–	**20822-050**
60	304.80	**30822-065**	**30819-783**	**20822-047**
84	426.70	**30822-089**	**30819-808**	**20822-048**
Item 3, Torx panhead screw to fix connector to perforated rail, M2.5 × 7, PU 100 pieces		**24560-147**	**24560-147**	**24560-147**
Item 2, Torx countersunk screw with, rto fix perforated rails to horizontal rail, M2.5 × 10, PU 100 pieces		**24560-148**	**24560-148**	**24560-148**

Guide rails

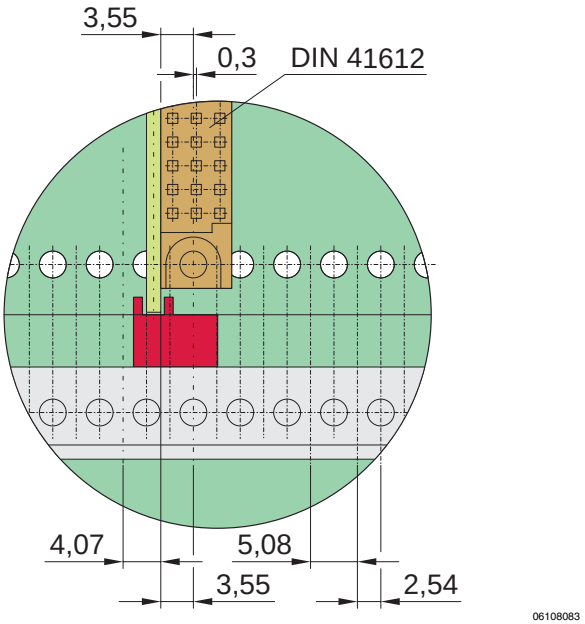

Front view: position of guide rails to connector (EN 60603-2/ DIN 41612)

Guide rails form the interface between the subrack mechanics and the sub-assemblies (PCBs, plug-in units, frame-type plug-in units, ...).
Guide rails for standard applications are 2 HP wide. Guide rails with coding (e.g. for CompactPCI or VME64bus applications) are 4 HP wide. Groove widths are 2 mm and 2.5 mm.
The guide rails are clipped into the rectangular cut-outs of the horizontal rails. They can be additionally bolted to the horizontal rail (type H only) for higher shock and vibration requirements.
The HP marking on the horizontal rail (28 HP and above) allows the rails to be simply fitted in the correct position (position of sub-assembly = "number in viewing window" or in front of the arrow marking on the guide rails).

Applications for guide rails

Application	
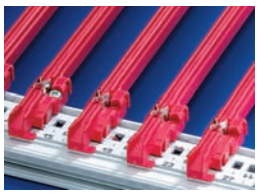 06102001	For plug-in units and frame type plug-in units (with front panels) (type: standard)
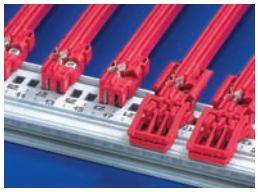 06102002 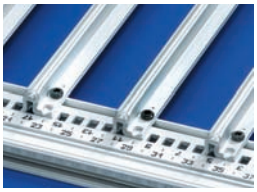 06102005	For boards without own front panel (type: accessories or robust version)
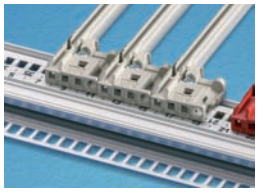 06106004	For CompactPCI or VME64x plug-in units (type: IEEE with coding; frame-type plug-in units may not be installed)
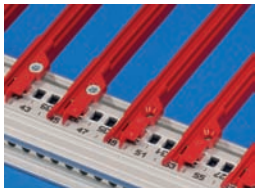 06104009	For drive unit plug-in units or boards of 4.4" (111.7 mm) height (type 4.4")

Accessories:
- ESD clips
- Keying/coding pegs
- PCB retainers

Guide rails for plug-in units and modules, one-piece, groove width 2 mm and 2.5 mm

Order Information

Assembly
- can be clipped into Al extruded horizontal rails
- into 1.5 mm thick plates

Storage temperature
from -40 °C ... 130 °C

Board lengths	Groove width	Colour	For plug-in units and frame type plug-in units		
			Standard		DIN connector mounting as standard
			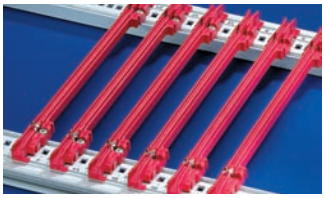 06102002		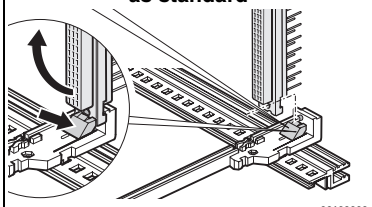 06102002
			up to 220 mm length, PBT, UL 94 V-0; L 280 mm length, multi-part, end piece PBT, UL 94 V-0, middle part Al extrusion	PBT, UL 94 V-0	PBT, UL 94 V-0, connector is clipped directly onto the guide rails, only suitable for euroboards 100 x 160 mm or 100 x 220 mm
mm	mm	mm	PU 10 pieces[2)]	1 piece (SPQ 50)[1)]	PU 10 pairs
70	2	red	–	**34579-230**	–
70	2	grey	–	**34579-231**	–
160	2	red	**24560-351**	**64560-001**	**64560-074**
220	2	red	**24560-353**	**64560-002**	**64560-075**
280	2	red	**24560-379**	–	–
340	2	red	**24560-380**	–	–
160	2.5	red	–	**64560-096**	–
220	2.5	red	–	**64560-098**	–

Accessories

Retention screw, PU 100 pieces 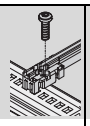	**24560-141**
ESD clip, PU 50 pieces	**24560-255**

1) SPQ (standard pack quantity): Order number includes 1 piece, but delivery is exclusively made in standard pack quantity (SPQ); please order at least the SPQ quantity or a multiple

2) Order no. includes one packing unit (PU); delivery is exclusively made in PU

Description of accessories see from page 6.41

Guide rails type "accessories", one-piece, groove width 2 mm and 2.5 mm

Order Information

Assembly
- can be clipped into Al extruded horizontal rails
- into1.5 mm thick plates

Storage temperature
from -40 °C ... 130 °C

Board lengths	Groove width	Colour	Giude rails type "Accessories"		"Accessories" strengthened	For heavy modules, Al extrusion, silver, robust version
			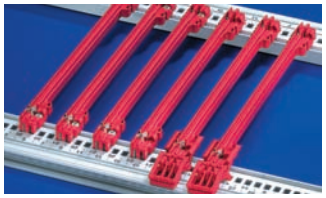 06102002		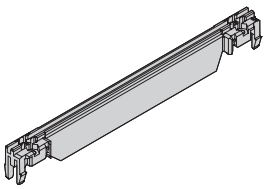 06102005	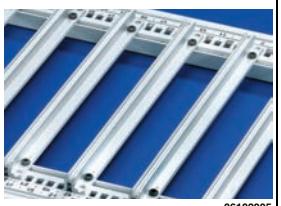 06102005
			up to 220 mm length, PBT, UL 94 V-0; L 280 mm length, multi-part, end piece PBT, UL 94V-0, middle part Al extrusion		PBT, UL 94 V-0; with additional centre materials to strength guide rails	Al extrusion; is screwed to horizontal rail "heavy" with retention screws
mm	mm	mm	PU 10 pieces[2]	1 piece (SPQ 50)[1]	1 piece (SPQ 50)[1]	1 piece (SPQ 10)[1]
100	2	red	–	**64560-082**	–	–
160	2	red	**24560-373**	**64560-005**	**64560-076**	–
160	2	grey	–	**64560-055**	–	**34562-881**
220	2	red	**24560-374**	**64560-006**	**64560-078**	–
220	2	grey	–	**64560-166**	–	**34562-882**
280	2	red/silver	**24560-375**	–	**64560-080**	**34562-883**
340	2	red/silver	**24560-376**	–	–	**34562-884**
400	2	red/silver	–	–	–	**34562-885**
160	2.5	silver	–	–	–	**34564-881**
220	2.5	silver	–	–	–	**34564-882**
280	2.5	silver	–	–	–	**34564-883**
340	2.5	silver	–	–	–	**34564-884**
400	2.5	silver	–	–	–	**34564-885**

Accessories

Retention screw, PU 100 pieces 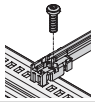	**24560-141**	**24560-141**	**24560-141**	**24560-157**
ESD clip, PU 50 pieces	**24560-255**	**24560-255**	**24560-255**	–
Board locking, red, PU 10 pieces	**24560-377**	**24560-377**	**24560-377**	–
Board handle, red, PU 10 pieces	**24560-378**	**24560-378**	**24560-378**	–
Identification strips for board handle, red, PU 1 sheet = 438 pieces	**60817-228**	**60817-228**	**60817-228**	–
Keying/coding	see page 6.40			–

1) SPQ (standard pack quantity): Order number includes 1 piece, but delivery is exclusively made in standard pack quantity (SPQ); please order at least the SPQ quantity or a multiple

2) Order no. includes one packing unit (PU); delivery is exclusively made in PU

For description of accessories see from page 6.40

Part number in bold face type: ready for despatch within 2 working days
Part number in normal type: ready for despatch within 10 working days

Guide rails for CompactPCI, VME64x with coding, 4.4" PCB, groove width 2 mm and 2.5 mm

Order Information

Assembly
- can be clipped into Al extruded horizontal rails
- into 1.5 mm thick plates

Storage temperature
from -40 °C ... 130 °C

			For CompactPCI, VME64x with coding				For 4.4" PCBs	
			In accordance with IEEE 1101.10 and IEC 60297-3-103		Offset 0.1" for power supplies in accordance with EEE 1101.10 and IEC 60297-3-103			
			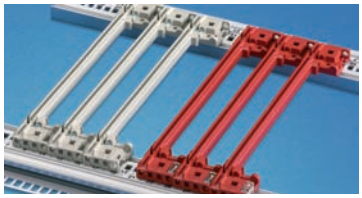 06106001		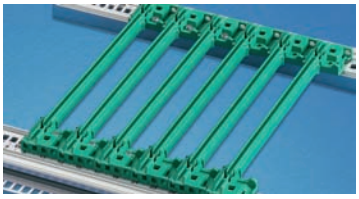 06106002		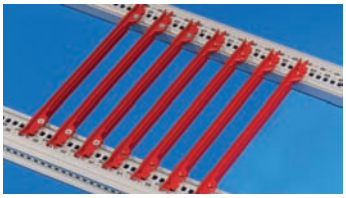 06104009	
			multi-piece, end piece PBT, UL 94 V-0, middle part Al extrusion	PBT, UL 94 V-0	PBT, UL 94 V-0, for installation of power supplies in CompactPCI systems or plug-in units with SMD placement		one-piece, PBT, UL 94 V-0; for 4.4" PCBs or drive units	
Board lengths mm	**Groove width** mm	**Colour** mm	**PU 10 pieces**[2]	**1 piece (SPQ 50)**[1]		**1 piece (SPQ 50)**[1]	**PU 10 pieces**	**1 piece (SPQ 50)**[1]
70	2	red	**24560-355**	**64560-085**	–	–	–	–
70	2	grey	**24560-360**	**64560-086**	–	–	–	–
160	2	red	**24560-356**	**64560-089**	–	–	**24560-361**	**64560-143**
160	2	grey	**24560-358**	**64560-090**	–	–	–	–
160	2	green	–	–	**24560-359**	**64560-071**	–	–
220	2	red	–	**64560-091**	–	–	**24560-362**	**64560-144**
220	2	grey	–	**64560-092**	–	–	–	–
220	2	green	–	–	–	**64560-072**	–	–
160	2.5	red	–	–	–	–	–	**64560-145**
220	2.5	red	**24561-330**	–	–	–	–	**64560-146**
220	2.5	grey	**24561-340**	–	–	–	–	–
280	2.5	red	**24561-331**	–	–	–	–	–
280	2.5	grey	**24561-341**	–	–	–	–	–
340	2.5	red	**24561-332**	–	–	–	–	–
340	2.5	grey	**24561-342**	–	–	–	–	–

Accessories

ESD clip, PU 50 pieces	**24560-255**	**24560-255**	–	–	–	–
ESD clip, for alignment pin, PU 50 pieces	**24560-256**	**24560-256**	**24560-256**	**24560-256**	–	–
Retention screw, PU 100 pieces	**24560-141**	**24560-141**	**24560-141**	**24560-141**	**24560-158**	**24560-158**
Coding peg, PU 100 pieces	**20817-501**	**20817-501**	**20817-501**	**20817-501**	–	–

1) SPQ (standard pack quantity): Order number includes 1 piece, but delivery is exclusively made in standard pack quantity (SPQ); please order at least the SPQ quantity or a multiple

2) Order no. includes one packing unit (PU); delivery is exclusively made in PU

For description of accessories see from page 6.40

Note

■ Reinforcement for plastic profiles (PVC) > 280 mm depth available on request

Guide rails, multi-piece, groove width 2 mm

Order Information

PCB:
fixed length at 160, 220, 280, 340 mm;
length 1000 mm for special dimensions

Assembly:
engageable in horizontal rail

Storage temperature:
end piece -40 °C ... +130 °C
PVC extrusion 0 °C ... +60 °C

Description	Length mm	Groove width mm	For plug-in units and frame type plug-in units "Standard"		"Accessories"		For 4.4" PCBs	
			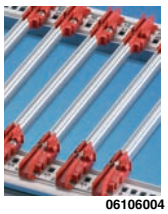 06106004		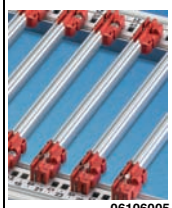 06106005		 06106006	
			end piece PBT, UL 94 V-0, middle section Al extrusion	end piece, PBT, UL 94 V-0, middle section plastic extrusion (PVC, RAL 7035)	end piece PBT, UL 94 V-0, middle section Al extrusion	end piece, PBT, UL 94 V-0, middle section plastic extrusion (PVC, RAL 7035)	end piece PBT, UL 94 V-0; middle section Al extrusion	end piece, PBT, UL 94 V-0, middle section plastic extrusion (PVC, RAL 7035)
			1 piece (SPQ 10)[1]	1 piece (SPQ 10)[1]	1 piece (SPQ 10)[1]	1 piece (SPQ 10)[1]	1 piece (SPQ 10)[1]	1 piece (SPQ 10)[1]
End piece, red, 1 pair		2	**64560-004**	**64560-004**	**64560-008**	**64560-008**	**64560-057**	**64560-008**
Profile, for 160 mm board length	95	2	**34560-891**	**34564-891**	**34560-891**	**34564-891**	**34560-891**	**34564-891**
Profile, for 220 mm board length	155	2	**34560-892**	**34564-892**	**34560-892**	**34564-892**	**34560-892**	**34564-892**
Profile, for 280 mm board length	215	2	**34560-893**	**34564-893**	**34560-893**	**34564-893**	**34560-893**	**34564-893**
Profile, for 340 mm board length	275	2	**34560-894**	–	**34560-894**	–	**34560-894**	–
Profile, for any board length	1000	2	**34560-900**	–	**34560-900**	–	**34560-900**	–
Profile, for any board length	1000	2	–	**34564-900**	–	**34564-900**	–	**34564-900**

Accessories

ESD clip, PU 50 pieces	**24560-255**		**24560-255**	–
Retention screw, PU 100 pieces	**24560-141**		**24560-141**	**24560-158**
Board locking, red, PU 10 pieces	–		**24560-377**	–
Board handle, red, PU 10 pieces	–		**24560-378**	–
Identification strips for board handle, red, PU 1 sheet = 438 pieces	–		**60817-228**	–
Keying/coding	–		see page 6.41	–

1) SPQ (standard pack quantity): Order number includes 1 piece, but delivery is exclusively made in standard pack quantity (SPQ); please order at least the SPQ quantity or a multiple

2) Order no. includes one packing unit (PU); delivery is exclusively made in PU

For description of accessories see from page 6.40

Note

- Strengthening for middle part (plastic extrusion) available on request

Part number in bold face type: ready for despatch within 2 working days
Part number in normal type: ready for despatch within 10 working days

Dimension drawings of guide rails

Standard

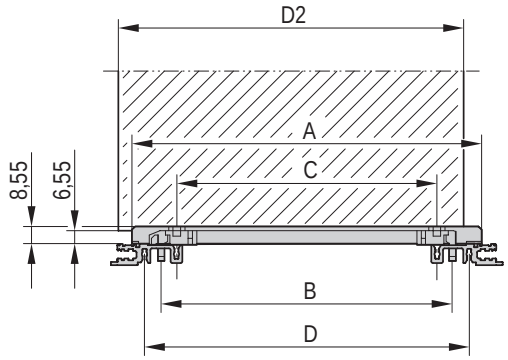

Robust version

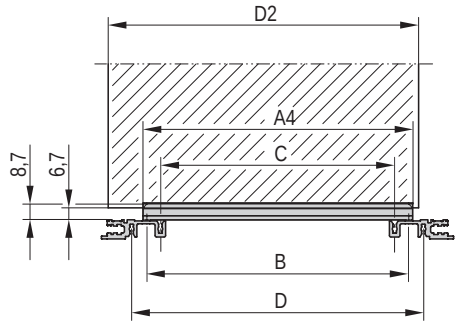

For accessories

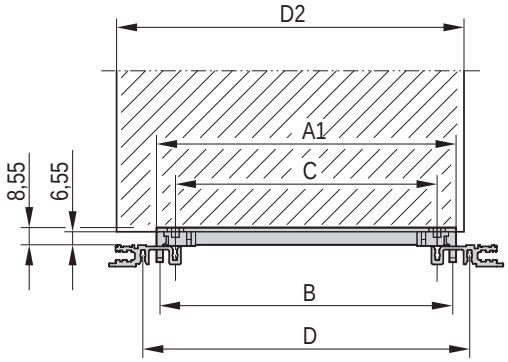

For accessories, strengthened

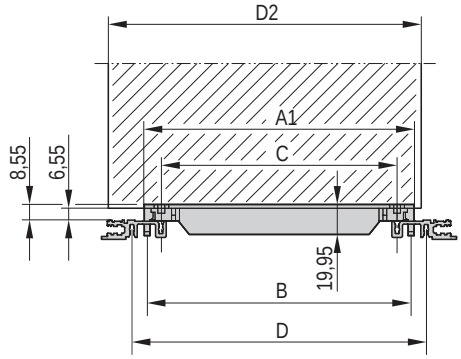

CompactPCI, VME64x

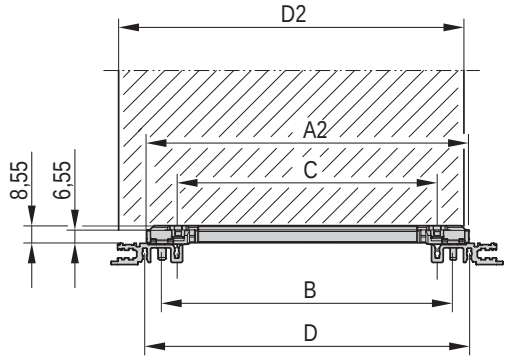

4.4" (111.7 mm)

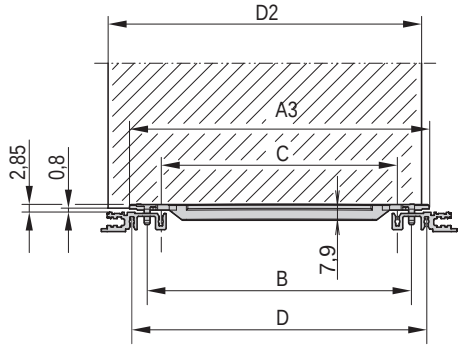

Dimensions table

Board height	Dimensions							
L	**A**	**A1**	**A2**	**A3**	**A4**	**B**	**C**	**D**
mm	**mm**	**mm**	**mm**	**mm**	**mm**	**mm**	**mm**	**mm**
70	71.5	47.9	59.39	63	49	45	30	60
100	101.5	77.9	89.39	93	79	75	60	90
160	161.5	137.9	149.39	153	139	135	120	150
220	221.5	197.9	209.39	213	199	195	180	210
280	281.5	257.9	269.39	273	259	255	240	270
340	341.5	317.9	322.39	333	319	315	300	330
400	401.5	377.9	389.39	393	379	375	360	390

A, A1, A2, A3, A4: length of rail
B: Pitch of snap-in fixing
C: Pitch of guide rail retention screws
D: Pitch of horizontal rail retention screws

Guide rail accessories

Order Information

Assembly	Colour	ESD clips, CompactPCI/VME 64 alignment pin for guide rails	Coding for subracks: Keying/coding block for guide rails "accessories"	Coding for subracks: Keying/coding for CompactPCI, VME64x handles to IEEE 1011.10 and IEC 60297-3-103
		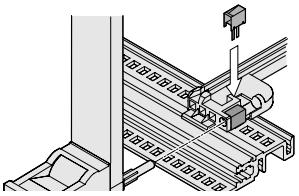 06103052	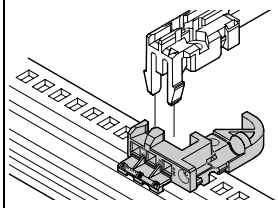 06103051	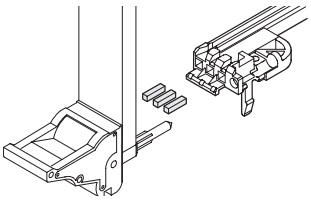 bga46316
		Spring steel, tin-plated, ESD clip, for alignment pin in accordance with IEEE; can be plugged into the guide rails with coding and into the keying/coding block; it ensures conductive contact between the alignment pin of the insertion/extraction handle (IEL or IET handle) and the horizontal rail	PBT, UL 94 V-0, keying/coding block is clipped into the horizontal rail next to the guide rails; please order keying/coding pegs separately	PC, UL 94 V0, RAL 7035; the keying/coding pegs (3 each) are inserted into the coding block or the handle
		PU 50 pieces	1 piece (SPQ 50)[1]	PU 100 pieces
At the top	red	–	**34579-232**	–
	grey	–	**34579-233**	**20817-501**
	silver	**24560-256**	–	–
At the bottom	red	–	**34579-234**	–
	grey	–	**34579-235**	**20817-501**
	silver	**24560-256**	–	–

1) SPQ (standard pack quantity): Order number includes 1 piece, but delivery is exclusively made in standard pack quantity (SPQ); please order at least the SPQ quantity or a multiple

2) Order no. includes one packing unit (PU); delivery is exclusively made in PU

Guide rail accessories

Order Information

Assembly mm	Colour mm	ESD clip for guide rails 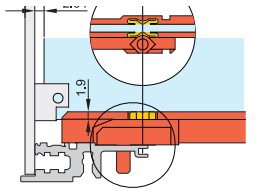 04503050 Spring steel, tin-plated, ensures conductive contact between circuit board and horizontal rail, on both the solder side and the component side PBT, UL 94 V-0 PU 50 pieces	Board retention for PCBs without front panel 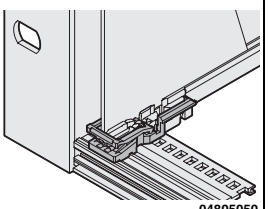 04805050 PBT, UL 94 V-0, red, to fix the PCB in the subrack (also slot 1), can also be used without board handle, minimum distance 3 HP PBT, UL 94 V-0 PU 10 pieces	Board handle for board locking 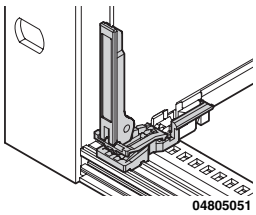 04805051 PBT, UL 94 V-0, red, insertion/extraction function with connection to board locking (also slot 1), mounting directly behind front panel (upper and lower), minimum distance 3 HP PBT, UL 94 V-0 PU 10 pieces	Identification strips for board handle 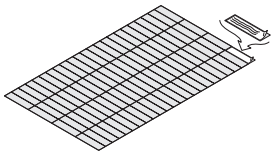 06108076 Polyester film, 31 x 4 mm, self-adhesive, white/matt (1 A4 sheet contains 438 pieces) PBT, UL 94 V-0 1 piece
	red	–	**24560-377**	**24560-378**	–
above/below	silver	**24560-255**	–	–	–
	white/matt	–	–	–	**60817-228**

Shielding top, bottom, front, rear, lateral

Cover plates can be used for electromagnetic shielding (with EMC contact springs) or as mechanical protection (without EMC springs)

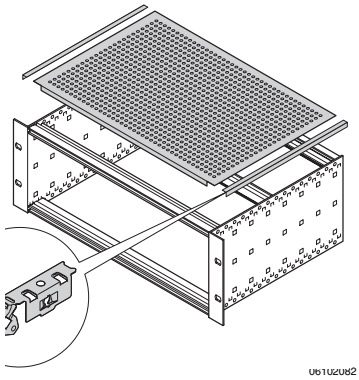

06102082

Universal EMC cover plate

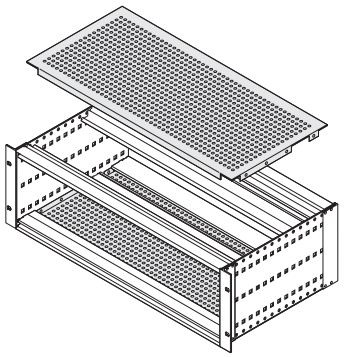

06102084

EMC cover plate

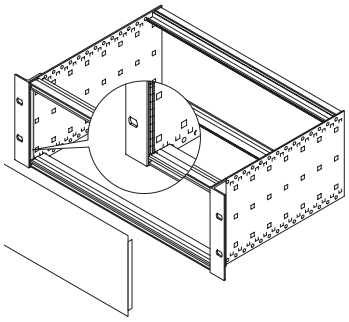

06105077

Front/rear panel

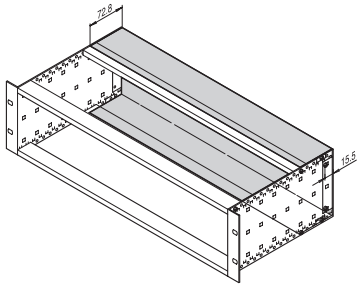

bza45814

Rear hood

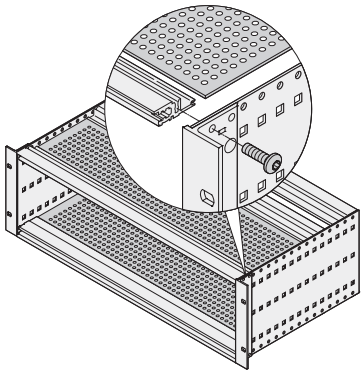

06108077

Description	Page
Universal EMC cover plate for top and bottom Inserted in the groove of the front and rear horizontal rails Shielding with contact springs, lateral contacting by bolting to the side panel with special contact springs	6.45
EMC cover plate top and bottom Inserted in the groove of the front and rear horizontal rails Shielding with contact springs, lateral contacting by bolting the bracket to the side panel	6.44
EMC shielding for front and rear, rear hood The front and rear of a subrack can be shielded with a front panel and 19" brackets to the front. The rear can be shielded with a front panel and a corner profile. If a rear hood is used, no corner profile may be mounted.	6.47
Cover plate for insertion in horizontal rail (type L) Mechanical protection, inserted between the grooves of the front and rear horizontal rails type L ("light")	6.43

Part number in bold face type: ready for despatch within 2 working days
Part number in normal type: ready for despatch within 10 working days

Cover plates for insertion into horizontal rail (type L), for PCBs 160, 220 mm

Order Information

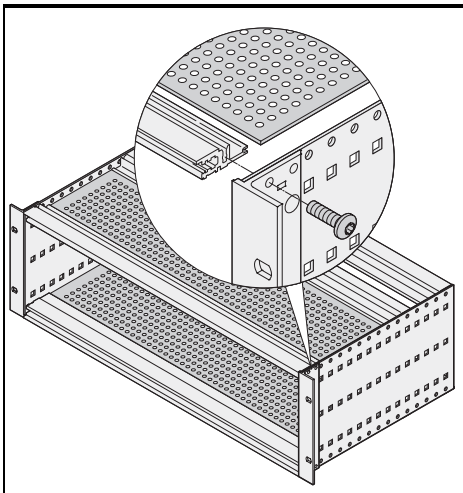

06197010

Cover plate for insertion in horizontal rails (type L)

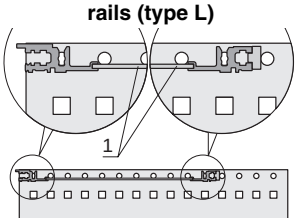

06197003

Al perforated plate 1.2 mm, hole diameter 3.8 mm, Al, untreated, perforation degree 60 %; for insertion into the groove of light horizontal rails (type L)

Width HP	Depth mm	Application	PU 1 pair
42	175	160 mm board depth	**24561-031**
42	235	160, 220 mm board depth	–
42	295	160, 220 mm board depth	–
63	175	160 mm board depth	**24561-041**
63	235	160, 220 mm board depth	–
63	295	160, 220 mm board depth	–
84	175	160 mm board depth	**24561-051**
84	235	160, 220 mm board depth	**24561-052**
84	295	160, 220 mm board depth	–
84	355	160, 220, 280 mm board depth	–
84	415	160, 220, 280 mm board depth	–
84	475	160, 220, 280 mm board depth	–

Cover plates for screwing onto the side panel, for board depths 160, 220, 280 mm

Order Information

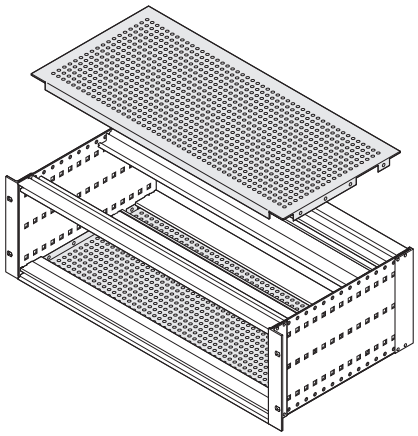

06197010

Cover plate
cover plate for bolting to side panel

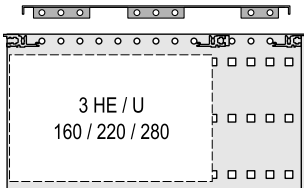

bza45819

Al, 1.0 mm, hole diameter, 4.0 mm, passivated, perforation degree 58%, incl. retention screws; for shielding please order 4 stainless steel EMC gaskets per subrack seperately

Stainless steel EMC gasket, between cover plate and horizontal rail

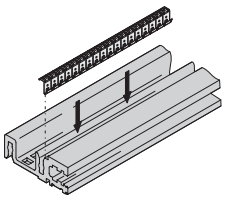

06106052

Stainless steel EMC gasket, clips into the horizontal rail and forms the contact with the cover plate; suitable for all horizontal rails

Width HP	Depth mm	Application	PU 1 pair	PU 10 pieces	PU 100 pieces
42	175	160 mm board depth	**24560-064**	**24560-241**	–
42	235	160, 220 mm board depth	**24560-065**		
42	275	160, 220 mm board depth CompactPCI (275 mm)	**24560-061**		
42	277.75	160, 220 mm board depth VME64x (277.75 mm)	**24579-090**		
42	295	160, 220 mm board depth	**24560-066**		
63	175	160 mm board depth	**24560-071**	**24560-243**	–
63	235	160, 220 mm board depth	**24560-072**		
63	275	160, 220 mm board depth CompactPCI (275 mm)	**24560-062**		
63	295	160, 220 mm board depth	**24560-073**		
84	175	160 mm board depth	**24560-078**	**24560-245**	**24560-246**
84	235	160, 220 mm board depth	**24560-079**		
84	275	160, 220 mm board depth CompactPCI (275 mm)	**24560-063**		
84	277.75	160, 220 mm board depth VME64x (277.75 mm)	**24579-092**		
84	295	160, 220 mm board depth	**24560-080**		
84	355	160, 220, 280 mm board depth	**24560-081**		
84	415	160, 220, 280 mm board depth	**24560-082**		
84	475	160, 220, 280 mm board depth	**24560-083**		
Assembly tool, for stainless steel EMC gasket (horizontal rails), 1 piece 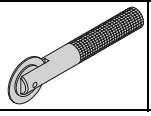			–	**24560-271**	

Part number in bold face type: ready for despatch within 2 working days
Part number in normal type: ready for despatch within 10 working days

Universal cover plates, for board depths 160, 220, 280 mm

Order Information

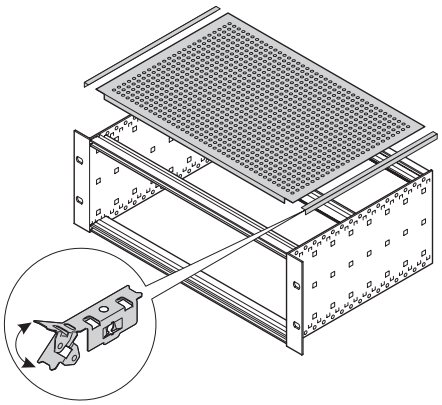

06105082

Universal cover plate

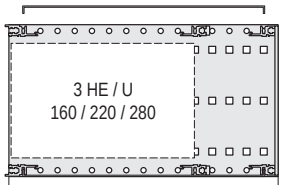

06108079

Al, 1.0 mm, hole diameter 4.0 mm, clear passivated, perforation degree 58 %, incl. lateral EMC sealing, incl. retention screws

Stainless steel EMC gasket, between cover plate and horizontal rail

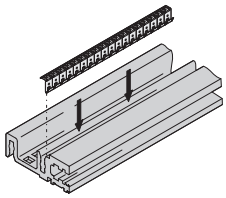

06106052

Stainless steel EMC gasket, clips into the horizontal rail and forms the contact with the cover plate; suitable for all horizontal rails

Width HP	Depth mm	Application	PU 1 pair	PU 10 pieces	PU 100 pieces
42	175	160 mm board depth	**24560-031**	**24560-241**	–
42	235	160, 220 mm board depth	**24560-032**		
42	295	160, 220 mm board depth	**24560-033**		
63	175	160 mm board depth	**24560-041**	**24560-243**	–
63	235	160, 220 mm board depth	**24560-042**		
63	295	160, 220 mm board depth	**24560-043**		
84	175	160 mm board depth	**24560-051**	**24560-245**	**24560-246**
84	235	160, 220 mm board depth	**24560-052**		
84	295	160, 220 mm board depth	**24560-053**		
84	355	160, 220, 280 mm board depth	**24560-054**		
84	415	160, 220, 280 mm board depth	**24560-055**		
84	475	160, 220, 280 mm board depth	**24560-056**		
Assembly tool, for stainless steel EMC gasket (horizontal rails),1 piece 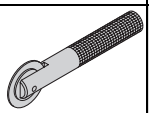			–	**24560-271**	

Rear hoods for 3 U and 6 U subracks (for stainless steel EMC gasket)

Order Information

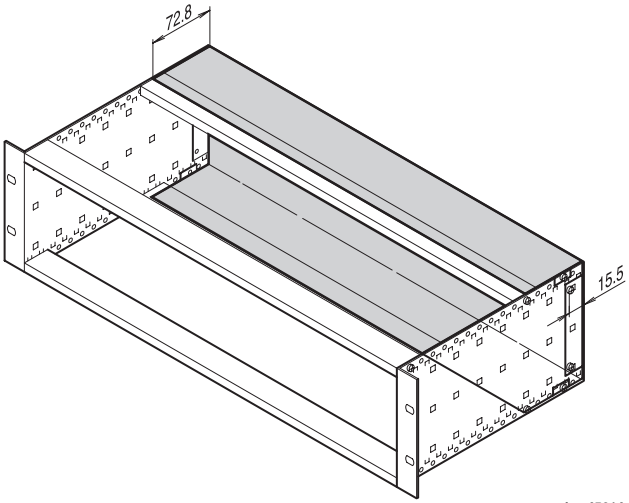

Rear hood

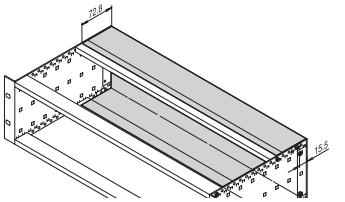

Al, 1 mm, clear passivated; 60 mm additional side panel depth required (board depth + 60 mm); for shielding please order EMC gasket for horizontal rail separately; cannot be used simultaneously with rear corner profile

Stainless steel EMC gasket, between cover plate and horizontal rail

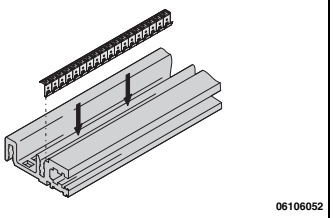

Stainless steel EMC gasket, clips into the horizontal rail and forms the contact with the cover plate; suitable for all horizontal rails

Height U	Width HP	1 piece	PU 10 pieces	PU 100 pieces
3	42	**34561-750**	**24560-241**	–
3	84	**34561-752**	**24560-245**	–
6	63	**34561-763**	**24560-243**	–
6	84	**34561-764**	**24560-245**	**24560-246**
Torx panhead screw, M4 × 6, St, zinc-plated, PU 100 pieces		**24560-135**	–	
Assembly tool, for stainless steel EMC gasket (horizontal rails), 1 piece 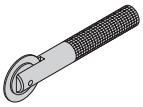			**24560-271**	

Note

■ Other dimensions of rear hood available on request

Part number in bold face type: ready for despatch within 2 working days
Part number in normal type: ready for despatch within 10 working days

Front/rear panels, unshielded

FRONT PANEL
EXPRESS

Order Information



04292001

Height U	Height mm	Width HP	Front panel: pre-anodised, cut edges, plain, Al, 2.5 mm — 1 piece	Front panel: pre-anodised, cut edges, plain, Al, 2.5 mm — 1 piece (SPQ 5)[1)]	Front panel: anodised, Al, 2.5 mm — 1 piece	Front panel: anodised, Al, 2.5 mm — 1 piece (SPQ 5)[1)]	Front panel: front anodised, rear iridescent green chromated, Al, 2.5 mm — 1 piece	Front panel: front anodised, rear iridescent green chromated, Al, 2.5 mm — 1 piece (SPQ 5)[1)]
1	44.45	28	–	–	–	–	**20850-423**	–
1	44.45	42	–	–	–	–	**20850-424**	–
1	44.45	63	–	–	–	–	**20850-425**	–
1	44.45	84	–	–	–	–	**20850-426**	–
2	84.0	84	**30818-271**	–	**30807-416**	–	**30847-461**	–
3	128.4	2	–	**30810-433**	–	**30810-432**	–	**30847-470**
3	128.4	3	–	**30818-272**	–	**30807-508**	–	**30847-471**
3	128.4	4	–	**30818-273**	–	**30807-481**	–	**30838-043**
3	128.4	5	–	**30818-274**	–	**30807-510**	–	**30838-044**
3	128.4	6	–	**30818-275**	–	**30807-482**	–	**30838-045**
3	128.4	7	–	**30818-276**	–	**30807-509**	–	**30838-046**
3	128.4	8	–	**30818-277**	–	**30807-484**	–	**30838-047**
3	128.4	10	–	**30818-279**	–	**30807-483**	–	**30838-049**
3	128.4	12	–	**30818-281**	–	**30807-485**	–	**30838-051**
3	128.4	14	–	**30818-282**	–	**30807-501**	–	**30838-053**
3	128.4	21	–	**30818-289**	–	**30807-487**	–	**30838-060**
3	128.4	28	–	**30818-296**	–	**30807-496**	–	**30838-067**
3	128.4	42	**30818-310**	–	**30807-494**	–	**30838-081**	–
3	128.4	63	**30818-331**	–	**30808-067**	–	**30838-102**	–
3	128.4	84	**30818-352**	–	**30807-506**	–	**30838-123**	–
4	172.9	42	**–**	**–**	**–**	**–**	**30847-463**	–
4	172.9	63	**–**	**–**	**–**	**–**	**30847-464**	–
4	172.9	84	**30818-434**	–	**30807-596**	–	**30847-465**	–
6	261.8	2	–	**30818-747**	–	**30818-741**	–	**30847-472**
6	261.8	4	–	**30818-518**	–	**–**	–	**30838-124**
6	261.8	5	–	**–**	–	**–**	–	**30838-125**
6	261.8	6	–	**–**	–	**–**	–	**30838-126**
6	261.8	7	–	**–**	–	**–**	–	**30838-127**
6	261.8	8	–	**30818-522**	–	**–**	–	**30838-128**
6	261.8	10	–	**30818-524**	–	**30807-753**	–	**30838-130**
6	261.8	12	–	**30818-526**	–	**–**	–	**30838-132**
6	261.8	14	–	**30818-528**	–	**30807-758**	–	**30838-134**
6	261.8	16	–	**30818-530**	–	**–**	–	**30838-136**
6	261.8	21	–	**30818-535**	–	**30807-757**	–	**30838-141**
6	261.8	28	–	**30818-542**	–	**30807-766**	–	**30838-148**
6	261.8	42	**30818-556**	–	**30807-764**	–	**30838-162**	–
6	261.8	63	**30818-577**	–	**30807-771**	–	**30838-183**	–
6	261.8	84	**30818-598**	–	**30807-776**	–	**30838-204**	–
9	395.1	4	**–**	**–**	**–**	**–**	–	**30847-476**
9	395.1	8	**–**	**–**	**–**	**–**	–	**30847-480**
9	395.1	10	**–**	**–**	**–**	**–**	–	**30847-482**
9	395.1	12	**–**	**–**	**–**	**–**	–	**30847-484**
9	395.1	84	**–**	**–**	**–**	**–**	**30847-556**	–

■Front panel assembly kits, sleeves, collar screws, quick-release fasteners see page 6.67

1) SPQ (standard pack quantity): Order number includes 1 piece, but delivery is exclusively made in standard pack quantity (SPQ); please order at least the SPQ quantity or a multiple

Front/rear panels shieldable with stainless steel EMC gasket

FRONT PANEL EXPRESS

Order Information


04292001

Height U	Height mm	Width HP	Front panel: front panel pre-anodised, cut edges, plain, Al, 2.5 mm — 1 piece	Front panel: front panel pre-anodised, cut edges, plain, Al, 2.5 mm — 1 piece (SPQ 5)[1)]	EMC sealing (St, stainless), inserted laterally into the slots of the front panel — PU 10 pieces	EMC sealing (St, stainless), inserted laterally into the slots of the front panel — PU 100 pieces
2	84	84	**30846-588**	–	**21101-775**	**21101-776**
3	128.4	2	–	**30846-864**		
3	128.4	3	–	**20846-425**		
3	128.4	4	–	**20846-426**		
3	128.4	5	–	**20846-427**		
3	128.4	6	–	**20846-428**		
3	128.4	7	–	**20846-429**		
3	128.4	8	–	**20846-430**		
3	128.4	10	–	**20846-431**	**21101-705**	**21101-706**
3	128.4	12	–	**20846-432**		
3	128.4	14	–	**20846-433**		
3	128.4	21	–	**20846-434**		
3	128.4	28	–	**20846-436**		
3	128.4	42	**20846-437**	–		
3	128.4	63	**20846-438**	–		
3	128.4	84	**30846-676**	–		
4	172.9	42	**30846-681**	–		
4	172.9	63	**30846-682**	–	**21101-713**	**21101-714**
4	172.9	84	**30846-683**	–		
6	261.8	2	–	**30846-865**		
6	261.8	4	–	**20846-443**		
6	261.8	5	–	**20846-444**		
6	261.8	6	–	**20846-445**		
6	261.8	7	–	**20846-446**		
6	261.8	8	–	**20846-447**		
6	261.8	10	–	**20846-448**		
6	261.8	12	–	**20846-449**	**21101-707**	**21101-708**
6	261.8	14	–	**20846-450**		
6	261.8	16	–	**20846-456**		
6	261.8	21	–	**20846-451**		
6	261.8	28	–	**20846-452**		
6	261.8	42	**20846-453**	–		
6	261.8	63	**20846-454**	–		
6	261.8	84	**30846-771**	–		
9	395.1	84	**30846-859**	–	**21101-709**	**21101-710**
Assembly tools, for mounting the EMC sealing (stainless steel)					**24560-270**	

■Front panel assembly kits, sleeves, collar screws, quick-release fasteners see page 6.67

1) SPQ (standard pack quantity): Order number includes 1 piece, but delivery is exclusively made in standard pack quantity (SPQ); please order at least the SPQ quantity or a multiple

Part number in bold face type: ready for despatch within 2 working days
Part number in normal type: ready for despatch within 10 working days

Front/rear panels shieldable with textile EMC gasket

FRONT PANEL
EXPRESS

Order Information


04292001

Height U	Height mm	Width HP	Front panel: Front panel shielded with texile EMC gasket — Al extrusion, 2.5 mm, front anodised, rear conductive; 3, 6 U with alignment pin (not 84 HP) — 1 piece	Front panel: Front panel shielded with texile EMC gasket — Al extrusion, 2.5 mm, front anodised, rear conductive; 3, 6 U with alignment pin (not 84 HP) — 1 piece (SPQ 5)[1)]	Front panel: EMC sealing (textile) — Textile gasket, core: foam, sleeve: textile cladding with CuNi coating, temperature range -40 ... 70°C; is glued onto the surface of the 19" bracket or the corner profile and forms the conductive connection to the U front panels — PU 10 pieces	Front panel: EMC sealing (textile) — Textile gasket, core: foam, sleeve: textile cladding with CuNi coating, temperature range -40 ... 70°C; is glued onto the surface of the 19" bracket or the corner profile and forms the conductive connection to the U front panels — PU 100 pieces
2	84	84	**20848-262**	–	–	**21101-856**
3	128.4	2	–	**30849-001**	**21101-853**	**21101-854**
3	128.4	3	–	**30849-004**		
3	128.4	4	–	**30848-354**		
3	128.4	5	–	**30848-378**		
3	128.4	6	–	**30848-380**		
3	128.4	7	–	**30848-382**		
3	128.4	8	–	**30848-356**		
3	128.4	10	–	**30848-386**		
3	128.4	12	–	**30848-358**		
3	128.4	14	–	**20848-013**		
3	128.4	21	–	**20848-020**		
3	128.4	28	–	**20848-027**		
3	128.4	42	**20848-047**	–		
3	128.4	63	**20848-068**	–		
3	128.4	84	**20848-097**	–		
4	172.9	28	–	**20848-268**	**21101-858**	–
4	172.9	42	**20848-269**	–		
4	172.9	63	**20848-270**	–		
4	172.9	84	**20848-271**	–		
6	261.8	2	–	**30849-002**	**21101-855**	**21101-856**
6	261.8	4	–	**30848-355**		
6	261.8	5	–	**30848-379**		
6	261.8	6	–	**30848-381**		
6	261.8	7	–	**30848-383**		
6	261.8	8	–	**30848-357**		
6	261.8	10	–	**30848-387**		
6	261.8	12	–	**30848-359**		
6	261.8	14	–	**20848-106**		
6	261.8	16	–	**20848-108**		
6	261.8	21	–	**20848-113**		
6	261.8	28	–	**20848-120**		
6	261.8	42	**20848-139**	–		
6	261.8	63	**20848-160**	–		
6	261.8	84	**20848-189**	–		
9	395.1	84	**20848-280**	–	**21101-859**	**21101-904**

■Front panel assembly kits, sleeves, collar screws, quick-release fasteners see page 6.67

1) SPQ (standard pack quantity): Order number includes 1 piece, but delivery is exclusively made in standard pack quantity (SPQ); please order at least the SPQ quantity or a multiple

Front panels hinged and foldable

Order Information

		Front panel, bottom-hinged		Front panel, hinged
		shielded	unshielded	shielded with texile EMC gasket
		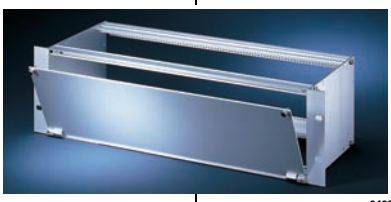 04295001		 04295002
		Al, 2.5 mm, front anodised, rear irisdescent green chromated; hinge, Zn die-cast, nickel-plated; sleeve, PA; knurled screw M2.5 x 12.3, St, nickel-plated; EMC sealing (textile)	Al, 2.5 mm, anodised, cut edges plain; hinge, Zn die-cast, nickel-plated; sleeve, PA; knurled screw M2.5 x 12.3, St,nickel-plated	Al, 2.5 mm, front anodised, rear irisdescent green chromated; Hinge, die-cast zinc, chrome-plated; EMC sealing (textile)
Height	**Width**			
U	**HP**	**1 piece**	**1 piece**	**1 piece**
3	28	**20848-608**	**20838-280**	–
3	42	**20848-599**	**20838-271**	–
3	63	**20848-600**	**20838-272**	–
3	84	**20848-601**	**20838-273**	**20848-611**
4	42	**20848-605**	**20838-277**	–
4	63	**20848-606**	**20838-278**	–
4	84	**20848-607**	**20838-279**	–
6	28	20848-696	–	–
6	42	**20848-602**	**20838-274**	–
6	63	**20848-603**	**20838-275**	–
6	84	**20848-604**	**20838-276**	**20848-617**

Part number in bold face type: ready for despatch within 2 working days
Part number in normal type: ready for despatch within 10 working days

EMC shielding concepts

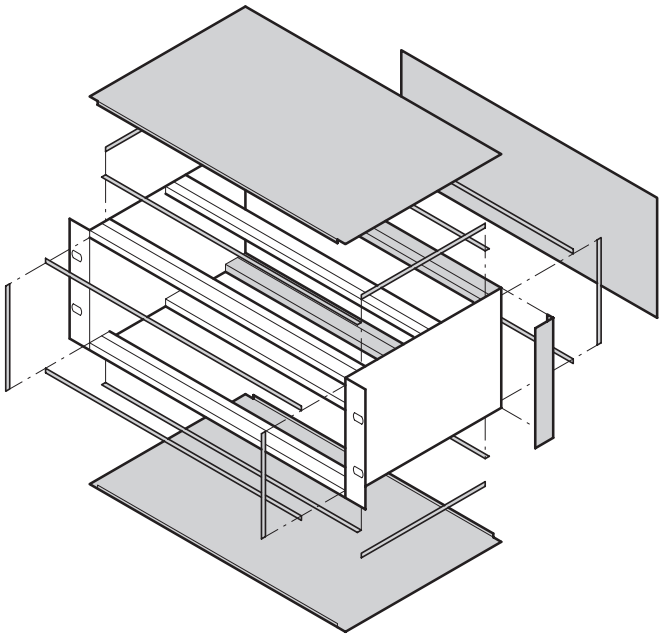

- Shielding concepts in accordance with IEEE and IEC
- Shielding effectiveness were established by various measurements in accordance with IEC 61587-3 and can be found on the Internet next to the corresponding off-the-shelf product
- Shileding concepts with EMC gaskets:
  – stainless steel gasket (suited for temperatures above 70°C)
  – textile gasket (-40 ... +70°C)
- The combined use of stainless steel and textile EMC gaskets is functionally possible without any problems

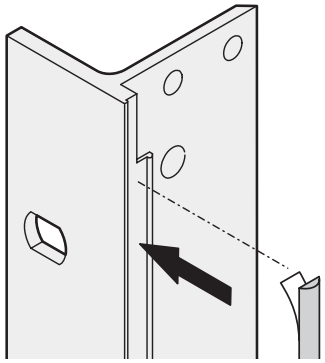

06108073

EMC gasketing concept with textile EMC gaskets

The gasket is glued onto the left side (seen from front) of the subrack or the front panel profile; EMC gasket with CuNi-coating guarantees high shielding for a long time, typically 40dB at 2 GHz; is glued on with temperature-resistant adhesive coating (protected by peel-off film); gasketing to the rear by means of front panels or with a rear hood
Note: rear hood and corner profile cannot be used simultaneously

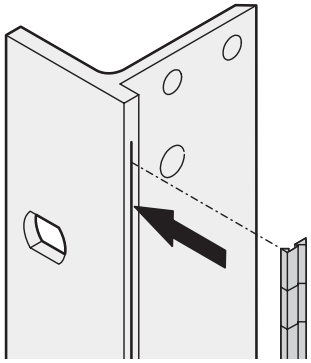

06108074

EMC gasketing concept with stainless steel EMC gaskets

Symmetrical positioning of the EMC gaskets on the left and right side of subrack and front panel; typical shielding 40 dB at 2 GHz
Note: rear hood and corner profile cannot be used simultaneously

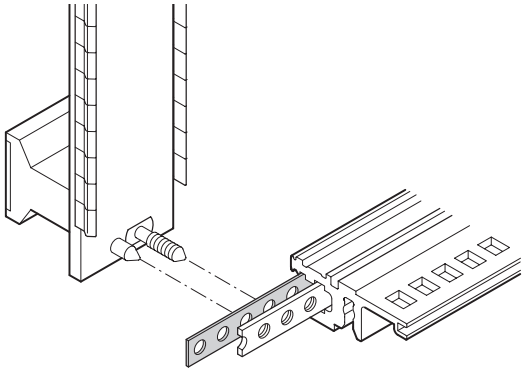

bza45853

Front panel shielding concept

Front panels are available for EMC gaskets (textile and stainless steel); alignment pins are pressed-in into the front panel to secure the position of the gaskets and to compress them evenly

EMC gaskets between front/rear panel and horizontal rail

Order Information

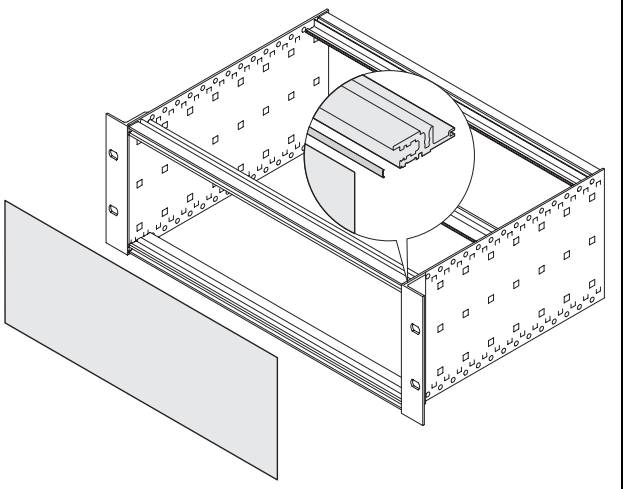

06102053

Stainless steel EMC gasket between front panel/rear panel and horizontal rail

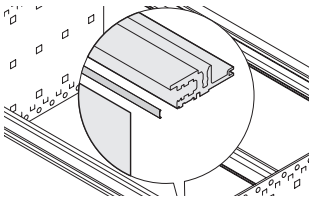

bza45819

stainless steel; for front and rear horizontal rails (type VT)

Width HP	Depth mm	PU 10 pieces	PU 100 pieces
28	131.8	**24560-229**	–
42	202.9	**24560-231**	–
63	304.5	**24560-233**	–
84	416.6	**24560-235**	**24560-236**

Part number in bold face type: ready for despatch within 2 working days
Part number in normal type: ready for despatch within 10 working days

EMC gaskets between front panel and 19" bracket/corner profile

Order Information

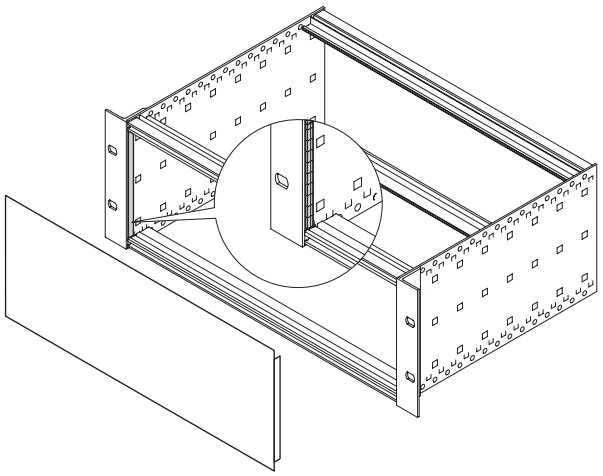

06105077

Stainless steel EMC between front panel/rear panel and 19" bracket/corner profile

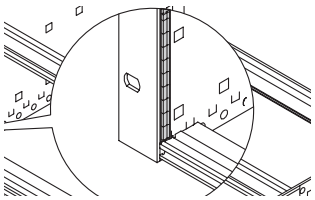

06105077

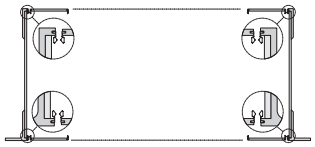

06108070

stainless steel, inserted laterally into the slots of the front panels, 19" brackets or corner profiles, temperature range over 70°C

EMC sealing (textile) between front panel/rear panel and 19" bracket/corner profile

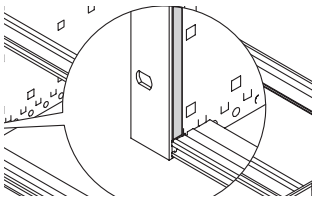

06102056

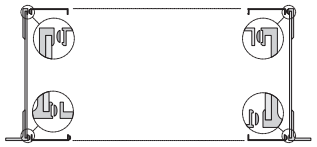

06102056

textile gasket, core: foam, sleeve: textile cladding with CuNi coating; temperature range -40...70°C, is glued onto the contact surface of the 19" bracket or the corner profile and forms the conductive connection to the U front panels

Height U	Depth mm	Stainless steel EMC PU 10 pieces	Stainless steel EMC PU 100 pieces	EMC sealing (textile) PU 10 pieces	EMC sealing (textile) PU 100 pieces
3	97.5	**21101-705**	**21101-706**	**21101-853**	**21101-854**
4	142.5	**21101-713**	**21101-714**	**21101-858**	–
6	232.5	**21101-707**	**21101-708**	**21101-855**	**21101-856**
9	365.0	**21101-709**	**21101-710**	**21101-859**	**21101-904**
Assembly tools, for mounting the EMC sealing (steel, stainless) 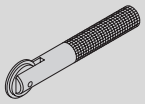		**24560-270**		–	

EMC gaskets between horizontal rail and horizontal rail

Order Information

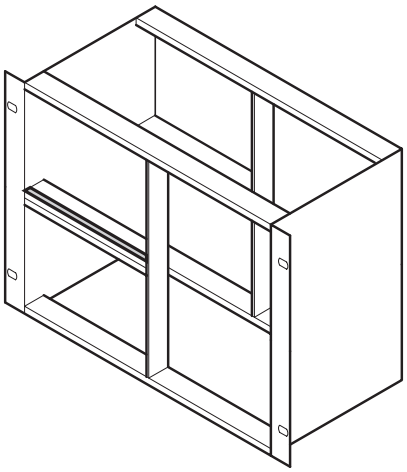

bpa46548

Stainless steel EMC gasket between horizontal rail and horizontal rail

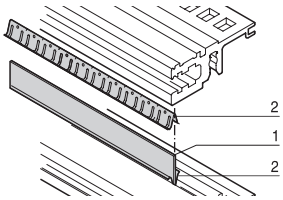

bza45877

Item 1: metal strip, Al, 1 mm, item 2: stainless steel EMC gasket;
for shielding of 2 horizontal rails positioned
directly one above the other if assembly area is divided vertically

Width HP	Depth mm	PU 1 kit
20	107.0	**24562-520**
28	147.0	**24562-528**
40	208.0	**24562-540**
42	218.0	**24562-542**
63	325.0	**24562-563**
84	431.0	**24562-584**

1) SPQ (standard pack quantity): Order number includes 1 piece, but delivery is exclusively made in standard pack quantity (SPQ);
please order at least the SPQ quantity or a multiple

EMC gaskets between front panel and side panel (recessed installation)

Order Information

Height U	Depth mm	Stainless steel EMC gasket between front panel and side panel (recessed installation)	Textile EMC gasket between front panel and side panel (recessed installation)
		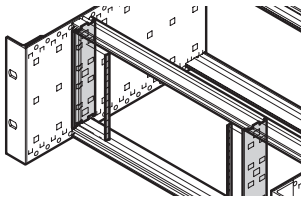 bpa45884 2 x support profiles, Al extrusion (1); 2 x EMC gaskets, stainless steel (2); assembly kit; for vertical EMC shielding between depth-offset shielded front panels and side panel	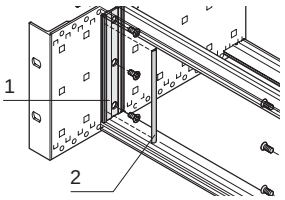 06102058 Item 1: 2 x support profiles, Al extrusion; item 2, 1 x textile EMC gasket, assembly kit for vertical EMC shielding between depth-offset shielded front panels and side panel
		PU 1 kit	**PU 10 pieces**
3	97.5	**24562-199**	**24560-180**
4	142.5	**24562-299**	**24560-280**
6	187.5	**24562-499**	**24560-480**
Assembly tools, for mounting the EM sealing (steel, stainless) 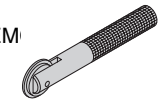		**24560-270**	–

EMC gaskets between backplane and side panel

Order Information

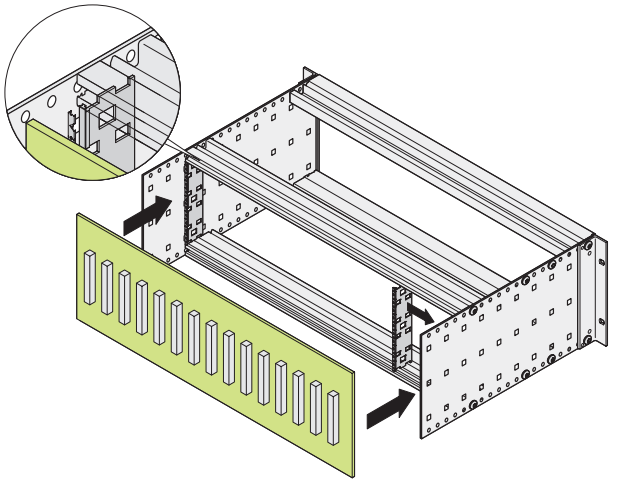

Stainless steel EMC gasket
between backplane and side panel (recessed installation)

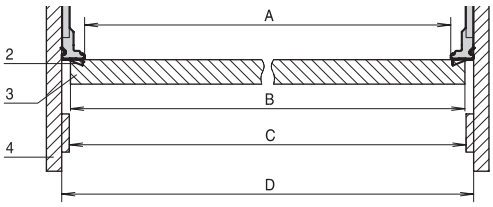

2 x support profile, Al extrusion,
2 x stainless steel EMC gasket;
for vertical EMC gasketing between depth-offset shielded backplane and side panel:
dimensions for 84 TE
A = 425.8 mm,
B < 429.9 mm,
C = 429.8 mm,
D = 431.8 mm

Height U	Depth mm	PU 1 kit
3	97.5	**24561-199**
6	187.5	**24561-499**
Torx Countersunk screw M4 x 5, St, zinc-plated, PU 100 pieces		**24560-139**
Square nuts M4, St, zinc-plated, PU 100 piece		**24560-140**

- With an appropriate design the backplane can be used as shielding rear panel; for that purpose a rear horizontal rail (type L-VT or H-VT) for deepened installation must be used, to ensure the horizontal contact
- For vertical contact the support profile is fixed to the europacPRO side panel (depth grid 30 mm)

Part number in bold face type: ready for despatch within 2 working days
Part number in normal type: ready for despatch within 10 working days

Combined mountings (6 U and 2 x 3 U one above the other)

Order Information

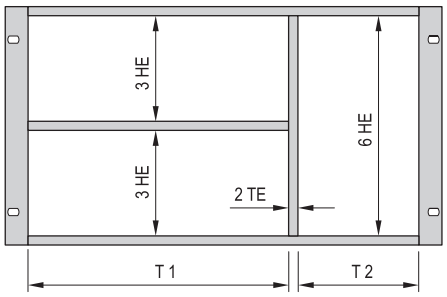 bza42182	Combined mounting Horizontal and vertical subdivision (incl. front panel for stainless steel EMC gasket)	Alternative front panels for combined mounting		Splitting extrusion
		Unshielded front panel, 6 U, 2 HP item 6	Front panel for textile EMC gasket, 6 U, 2 HP item 6	For combined mounting item. 2
	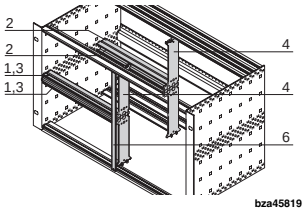 bza45819	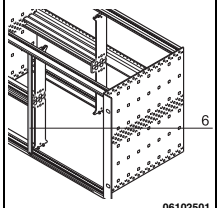 06102501	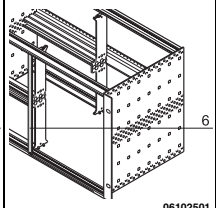 06102501	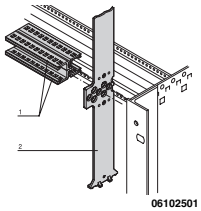 06102501
	Item 1: 2 front horizontal rails (H-KD), Al extrusion, anodised; item 2: 2 rear horizontal rails (AB), Al extrusion, anodised; item 3: threaded insert, St, zinc-plated; item 4:Zn die-cast support member; item 6: front panel 2 HP, 6 U, shielded; with stainless steel_ EMC gasket (84:0 without item 4, 6)	Al, 2.5 mm, front anodised, rear iridescent green chromated	Al, 2.5 mm, U-profile with notch, 6 U/2 HP	6 U, die-cast zinc; splitting extrusion is inserted in the grid holes of the horizontal rail; the splitting extrusion can be bolted
Width pitch T1:T2 **HP**	**PU 1 kit**	**1 piece (SPQ 5)[1)]**	**1 piece (SPQ 5)[1)]**	**1 piece**
20:62	**24562-420**	**30847-472**	**30849-140**	**64560-010**
40:42	**24562-440**			
42:40	**24562-442**			
63:19	**24562-463**			
84:0	**24562-484**			
Torx screw M4 × 14, zinc-plated, PU 100 pieces Assembly horizontal rail/strut	–	–	–	**24560-145**
Panhead screw M2.5 × 10, St, zinc-plated, PU 100 pieces Assembly horizontal rail/strut	–	–	–	**24560-179**
Pozidrive/slotted collar screw M2.5 x 12.3, St, nickel-plated, PU 100 pieces	–	**21101-101**	**21101-101**	–
Collar screw with pozidrive M2.5, black, zinc-plated, PU 100 pieces	–	**21101-102**	**21101-102**	–
Plastic washer 2.7 x 5 x 1, PA 6, PU 100 pieces	–	**21101-121**	**21101-121**	–
Textile gasket, core: foam, sleeve: textile cladding with CuNi coating, UL 94 V-0 PU 10 pieces	–		**21101-855**	

- Subdivision of the 6 U assembly area into:
  - 2 x 3 U
  - 1 x 6 U
- Designed to accept euroboards (100 mm high) and double euroboards (233.35 mm high)

Note

- Please order EMC gasketing kit for horizontal rails separately, see page 6.54
- Please order perforated strips for horizontal rails separately, see page 6.32
- Please order rear centre horizontal rail separately, see page 6.30

Horizontal boards mounting in 3 or 4 U subrack

Order Information

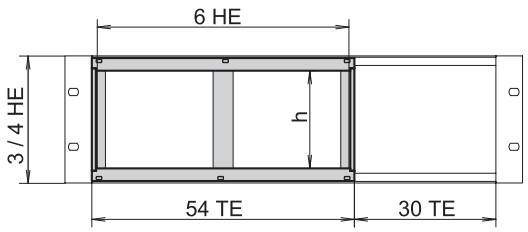

H = usable height (1 TE = 1 HP, 1 HE = 1 U)

bpa45914

Height	Useable height h	Other dimensions and options		Horizontal board mounting in 3 or 4 U subrack		
				Complete kit	Front frame for EMC gasketing	Front frame, unshielded
				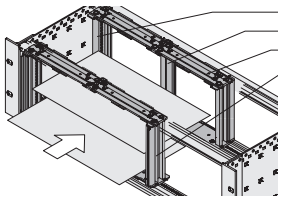 06102073	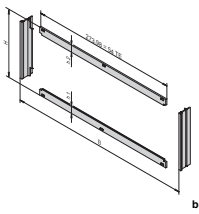 bpa45913	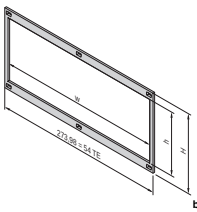 bza43061
				Struts, die-cast zinc; horizontal rails to front and rear; threaded insert; assembly kit; for horizontal assembly of double-height euroboards in 3 or 4 U high subracks/cases; 54 HP space required	2 horizontal covers, Al 2.5 mm, front anodised, rear iridescent green chromated; 2 vertical trims, Al extrusion, clear passivated; stainless steel EMC gasket; front frame forms the contact between subrack and the sub-assemblies	Al, 2.5 mm, clear anodised; front frame with cut-out, inside clearance width w=266.35 mm
U	HP	Horizontal rail, front	Horizontal rail, rear (H-VT)*	PU 1 kit	PU 1 kit	1 piece
3	20			**24564-117**	**24564-109**	**34564-108**
3	20			**24564-118**	**24564-109**	**34564-109**
4	28			**24564-217**	**24564-209**	**34564-208**
Assembly tools, for mounting the EMC sealing (steel, stainless)		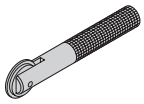		–	**24560-270**	–

* For direct backplane mounting

Note

■ **Please order front frame for EMC schielding separately**

Part number in bold face type: ready for despatch within 2 working days
Part number in normal type: ready for despatch within 10 working days

Mounting plates

Order Information

			Mounting plate can be used in combination with cover plates	Mounting plate for use without cover plate	Mounting plate Assembly strips for partial widths
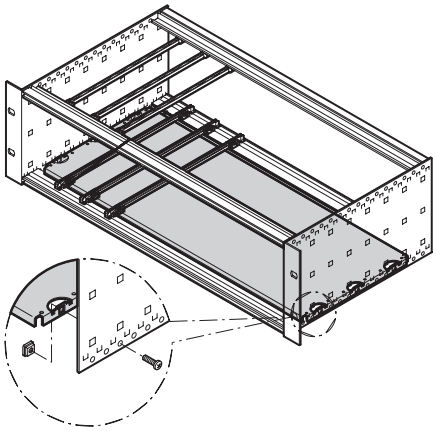 bpa45875			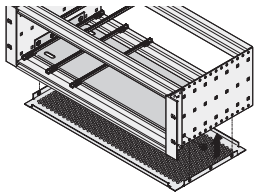 bza45819	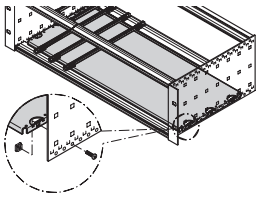 06102501	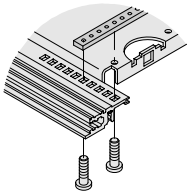 06102501
			Al, 1.5 mm; mounting is only possible over the entire width between the side panels	Al, 1.5 mm; mounting is over the entire width; for mounting over partial width, please order fixing strips separately	St, 2 mm, zinc-plated; is bolted from front to back onto the with horizontal rails; serves to fix mounting plates
Width HP	**W mm**	**Board lengths mm**	**1 piece**	**1 piece**	**1 piece**
28	146.88	160	**34563-001**	**34562-745**	**30840-021**
28	146.88	220	**34563-009**	**34562-749**	**30840-033**
28	146.88	160	–	**34562-753**	30840-045
28	146.88	220	–	**34562-757**	**30840-057**
42	217.99	160	**34563-002**	**34562-746**	**30840-021**
42	217.99	220	**34563-014**	**34562-750**	**30840-033**
42	217.99	160	–	**34562-754**	30840-045
42	217.99	220	–	**34562-758**	**30840-057**
63	324.67	160	**34563-003**	**34562-747**	**30840-021**
63	324.67	220	**34563-019**	**34562-751**	**30840-033**
63	324.67	160	–	**34562-755**	30840-045
63	324.67	220	–	**34562-759**	**30840-057**
84	431.35	160	**34563-004**	**34562-748**	**30840-021**
84	431.35	220	**34563-024**	**34562-752**	**30840-033**
84	431.35	160	–	**34562-756**	30840-045
84	431.35	220	–	**34562-760**	**30840-057**
Assembly kit for mounting plate, PU 1 kit (Torx Countersunk screw M4 x 5, St, zinc-plated, 12 pieces; screw M4 x 6, St, zinc-plated 10 pieces; M4 square nut, St, zinc-plated, 10 pieces)			**24560-184**	**24560-184**	–
Assembly kit for assembly strips of mounting plate Torx screw M2.5 × 5, St, zinc-plated, PU 100 pieces			–	–	**24560-146**

Note

- For installation and assembly of heavy components
- In addition to the mounting plate also (EMC) cover plates can be fitted to the subrack
- The mounting plate is as wide as the subrack or the system case and is fixed to the side panels
- A guide rail can be fitted in the first and last slot position
- Guide rails 4.4" and "strengthened" cannot be used

Panel mounting

Order Information

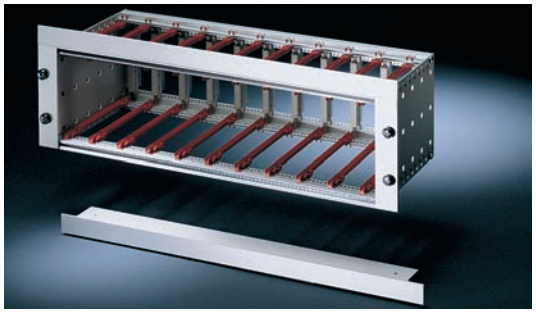

06197021

Trim
19" bracket without handle holes

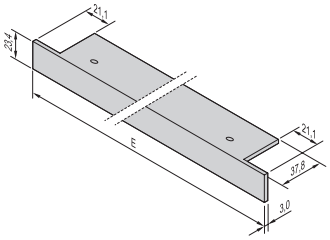

06105067

Al extrusion, anodised; for optical closure of the subrack to the front, above and below, when fitting into panels; is bolted to horizontal rail to front; per subrack 2 trims and 4 screws are needed

Usable width HP	Length mm	1 piece
42	269.2	**34561-777**
84	482.6	**34561-779**
Torx Panhead screw 2.5 × 9.3, zinc-plated, PU 100 pieces		**24560-141**

Note

■ Further widths available on request

Assembly cut-out

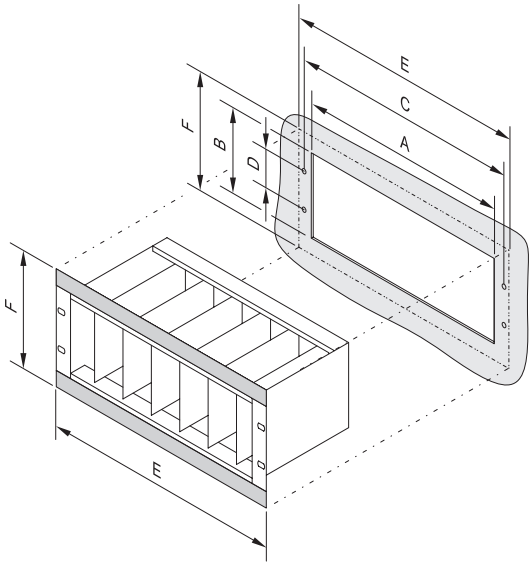

06105066

Dimensions table

U	HP	A mm	B mm	C mm	D mm	E mm	F mm
3	42	237.0	145.0	252.0	57.15	269.2	179.4
3	63	343.0	145.0	358.5	57.15	375.9	179.4
3	84	450.0	145.0	465.0	57.15	482.6	179.4
6	42	237.0	278.5	252.0	190.5	269.2	312.7
6	63	343.0	278.5	358.5	190.5	375.9	312.7
6	84	450.0	278.5	465.0	190.5	482.6	312.7

Part number in bold face type: ready for despatch within 2 working days
Part number in normal type: ready for despatch within 10 working days

Central locking

Order Information

	Central locking for PCBs without front panels	
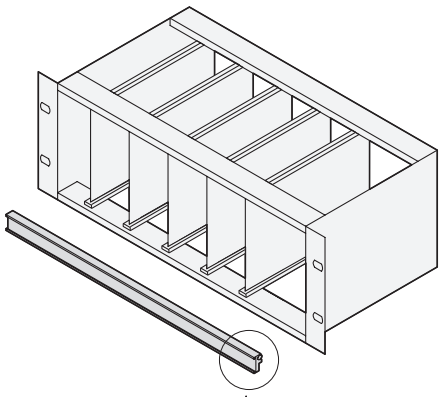 06197010	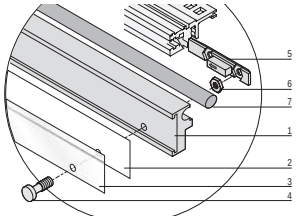 bza45819 item 1: central rail, Al, anodised; item 2: ID label, white; item 3: transparent cover strip, plastic; item 4: 2 x knurled screw; item 5: 2 x slide nut; item 6: 2 x hexagon nut M2.5; item 7: rubber gasket; retaining rail allows joint locking of PCBs and serves as identification plate; can be fitted to front and rear horizontal rail	
Width HP	**Length mm**	**1 piece**
84	482.6	**24560-167**

Note

- The retaining rail provides common locking of PCBs and acts as the identification plate
- For 84 HP europacPRO subracks only
- Can be fitted to front and rear horizontal rails

Telescopic slides for assembly of subracks into cabinets



- For mounting 84 HP wide subracks in the 19" plane
- Loading capacity: 25 kg per pair
- The guiding profile is matched to the fixing dimension in the cabinet (it is bolted to the 19" profile of the cabinet); the adaptor rail is matched to the depth and fixing dimension on the subrack (it is inserted into the guiding profile like a telescopic slide)
- Safety notice:
  no protection against extraction, no stop at full extension

Order Information

Telescopic slides with guiding profile for fitting in cabinets

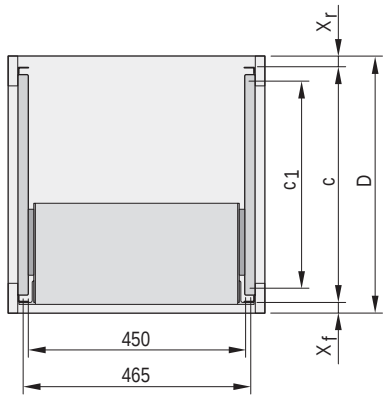

Description (1)	Depth D	x_f	x_r	c	c1	Part no.
	mm	mm	mm	mm	mm	
VARISTAR	600	50	50	500	369	**24562-464**
VARISTAR	800	50	50	700	569	**24562-466**
VARISTAR	900	50	50	800	669	**24562-467**
VARISTAR	1000	50	50	900	769	**24562-468**
VARISTAR	1100	50	50	1000	869	**24562-472**
VARISTAR	1200	50	50	1100	969	**24562-473**
eurorack	600	60	60	480	397	**24562-449**
eurorack	800	60	60	680	597	**24562-451**
eurorack	900	60	60	780	697	**24562-452**
Minirack	500	33	60	407	350	**24562-460**
Minirack	600	33	60	507	450	**24562-461**
Minirack	780	33	60	687	630	**24562-462**
Lab rack	250	0	0	250	162	**24562-446**

x_f, xr: distanceof 19" plane to cabinet edge (front, rear)
c: distance of 19" planes to one another,
c1: assembly dimensions of guiding profile on the 19" panel/slide mounts

Order Information

Telescopic slides with adaptor rail for subracks

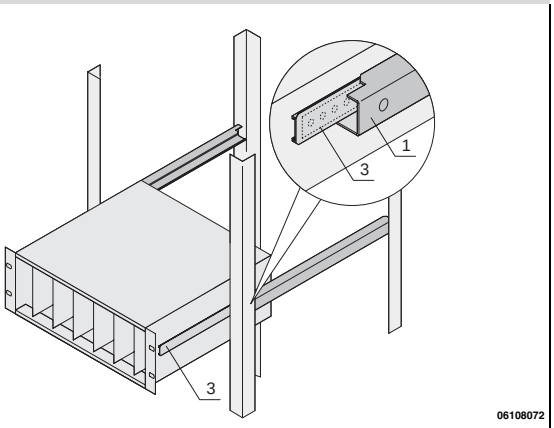

For subrack depth (3)	Part no.
mm	
175	**24562-453**
235	**24562-454**
295	**24562-455**
355	**24562-456**
415	**24562-457**
475	**24562-458**

Part number in bold face type: ready for despatch within 2 working days
Part number in normal type: ready for despatch within 10 working days

Divider plates

Order Information

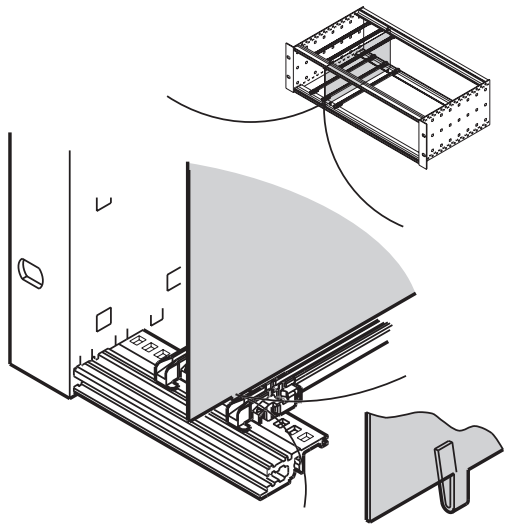

bpa45912

Height	Depth	A	B	H	Divider plate
U	mm	mm	mm	mm	1 piece
3	160	158.3	135.0	113.6	**34562-761**
3	220	218.3	195.0	113.6	**34562-762**
6	160	158.3	135.0	246.9	**34562-763**
6	220	218.3	195.0	246.9	**34562-764**

Mounting position for stainless steel EMC gasket

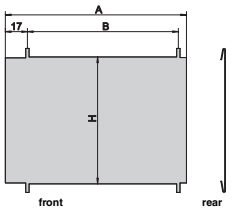

bpa45911

Mounting position for textile EMC gasket

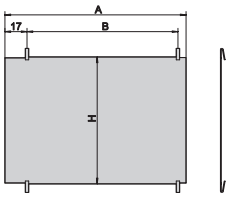

06105078

Stainless steel, 1 mm, is mounted by clipping into horizontal rail, space requirement on component side 2 mm; assembly position differs in accordance with sealing concept (EMC stainless steel gasket or textiel); a subsequent installation of the divider plate in an already assembled subrack required to remove the horizontal rails first

Air baffle for slots

Order Information

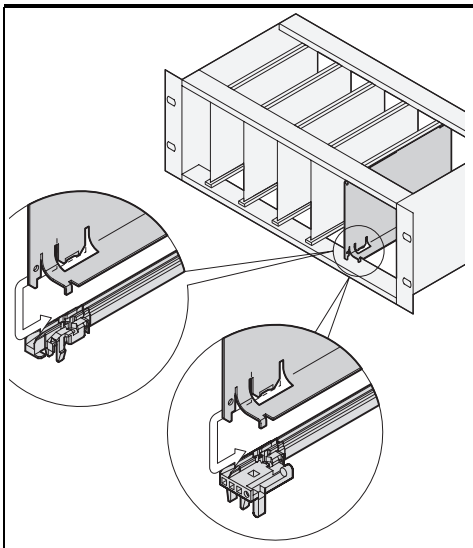
06101507

Depth mm	Width HP	Height U	Air baffle without front panel	Air baffle with front panel: front panel with lateral groove; groove for stainless steel EMC gasket	Air baffle with front panel: U front panel for textile EMC gasket
			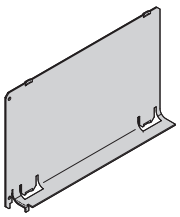 06108085	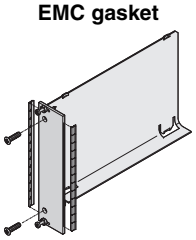 06108087	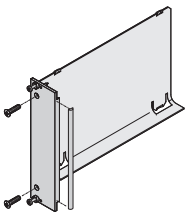 06108088
			Al, 1 mm, incl. assembly kit; prevents an air short circuit in unoccupied slot positions; is pushed into the groove of the guide rails	Air baffle, Al, 1 mm; front panel, Al, 2.5 mm, front anodised, rear conductive; stainless steal EMC gasket; assembly kit; prevents an air short circuit in unoccupied slot positions; is pushed into the groove of the guide rails	Air baffle, Al, 1 mm, front panel, Al extrusion, 2.5 mm, front anodised, rear conductive; textile EMC gasket, assembly kit; prevents an air short circuit in unoccupied slot positions; is pushed into the groove of the guide rails
			1 piece	1 piece	1 piece
160	4	3	**34562-823**	20848-712	20848-728
160	4	6	**34562-826**	20848-720	20848-736
160	8	3	**34562-833**	20848-714	20848-730
160	8	6	**34562-836**	20848-722	20848-738
160	12	3	**34562-843**	20848-716	20848-732
160	12	6	**34562-846**	20848-724	20848-740
220	4	3	**34562-824**	20848-713	20848-729
220	4	6	**34562-827**	20848-721	20848-736
220	8	3	34562-834	20848-715	20848-731
220	8	6	34562-837	20848-723	20848-739
220	12	3	**34562-844**	20848-717	20848-733
220	12	6	34562-847	20848-725	20848-741
Assembly tool for EMC sealing (steel, stainless), 1 piece 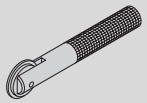			–	**24560-270**	–

Note

■ Air baffle for 280 mm deep and for 80 mm rear I/O boards available on request

Part number in bold face type: ready for despatch within 2 working days
Part number in normal type: ready for despatch within 10 working days

19" module support, slide rail DIN 43880

Order Information

	Module support		Slide rail DIN 43880
	to accommodate disrtibution modules	Hood	
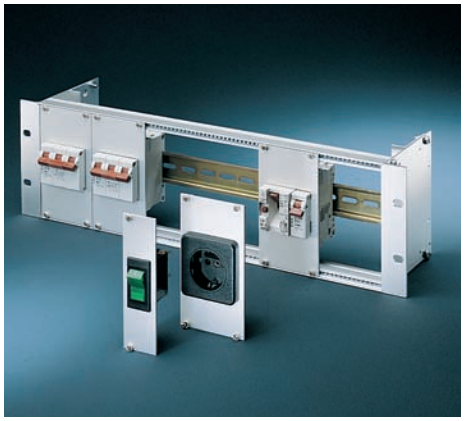 06197010	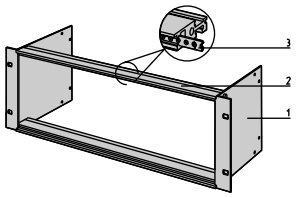 bza45819	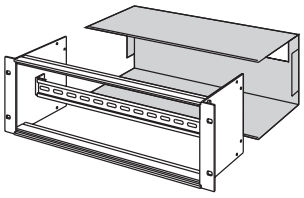 06102501	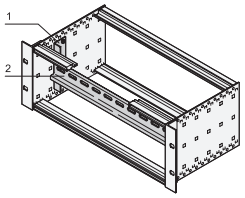 06102501
	2 side panels, Al, 1.8mm; 2 horizontal rails with: short top, threaded insert, GND/earthing kit, assembly kit; please order slide rails separately	Al, 1mm, with brush stripe, is screwed on rear side of the module support	2 adaptor brackets, Al, 2 mm; equipment slide rail, height 35 mm, width 84 HP, depth 7.5 mm; mounted laterally in module support or subrack; power distribution modules see page 3.35
Height U / **Width HP** / **Depth mm**	**1 piece**	**1 piece**	**1 piece**
3 / 84 / 115.5	**20119-193**	**20119-374**	**24560-171**

Cable duct, edge protection

Order Information

Height U	Width HP	Cable channel 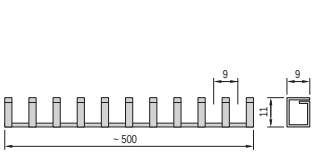 06108089 PP, UL 94 V-2, white; length 500 mm, cable opening 11 mm x 15 mm; assembly in front of horizontal rail (is screw-fixed on threaded insert or slide nut) 1 piece	Edge protection 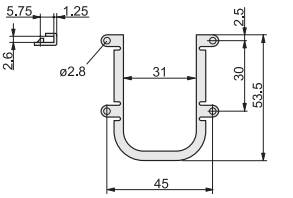 06102501 ABS, UL 94 V-0, RAL 7035, edge protection curved; for wall thicknesses from 2.0 to 2.5 mm; fixing by means of snap tabs in holes; seves to cover cut-outs e.g. in subrack side panels, thus avoiding damage to cables, etc. PU 10 pieces
3	84	**69000-507**	**24560-170**

06197010

Mounting variants of edge protectors

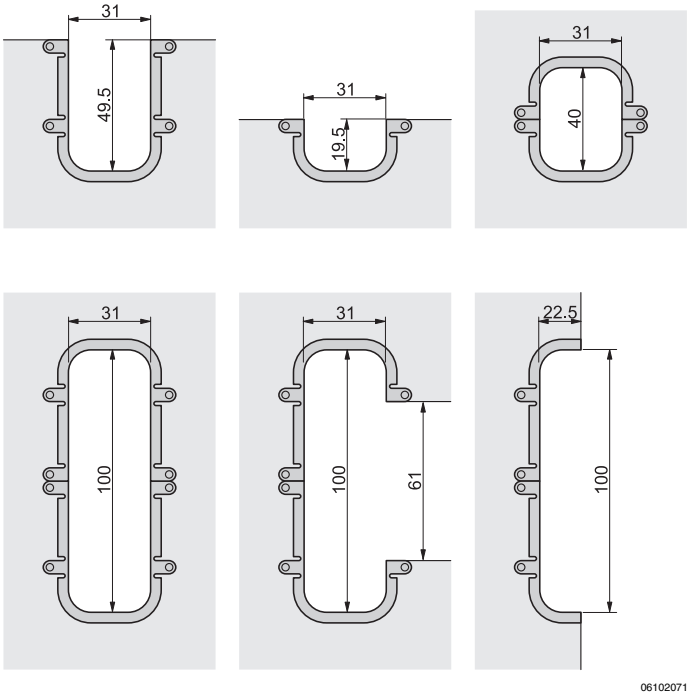

06102071

Part number in bold face type: ready for despatch within 2 working days
Part number in normal type: ready for despatch within 10 working days

Assembly parts

- Quick-release fastener
- Sleeve
- Screws
- Cage nuts
- Tools

Quick-release fastener

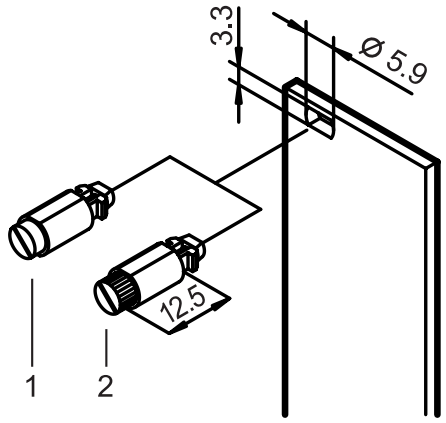

06702062

- Vibration and shock proof
- 1/4 rotary lock with defined stop
- Detection of fastening position through slot position

Delivery comprises

Qty	Description
1	Locking pin, St, locking, Zn die-cast
1	Press-in sleeve, POM

Order Information

Item	Description	Qty/PU	Part no.
1	With slotted head, grey	100	**21101-847**
1	With slotted head, black	100	**21101-848**
2	With knurled head, grey	100	**21101-849**
2	With knurled head, black	100	**21101-850**

Note

Quick-release fastener: mounting without threaded insert

Sleeve

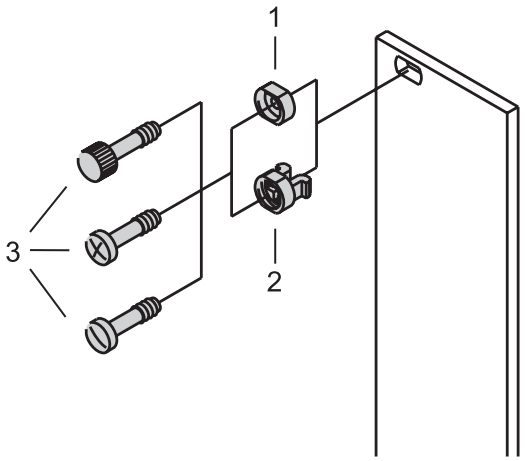

06702061

Order Information

Item	Description	Qty/PU	Part no.
2	Plastic sleeve, PA, grey	100	**21100-464**
2	Plastic sleeve, PA, black	100	**21100-591**
1	Metal sleeve, brass, nickel-plated	10	**21100-659**
1	Metal sleeve, brass, nickel-plated	100	**21100-660**
1	Metal sleeve, brass, black	100	**21100-886**
1	Metal sleeves, steel, stainless	10	**21100-661**
1	Metal sleeves, steel, stainless	100	**21100-662**

Note

- Metal sleeves must be pressed-in into front panels
- Sleeve not suitable for front panels 2 HP

Collar screw

Order Information

	Description	Application	Material	Dimension	Qty/PU	Part no.
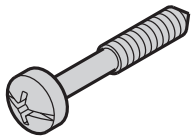 AZA46586	Collar screw with Pozidrive/slot	For mounting of front panels; when using threaded inserts	St, nickel-plated	M2.5 × 12.3	100	**21101-101**
			St, zinc-plated, black	M2.5 × 12.3	100	**21101-102**
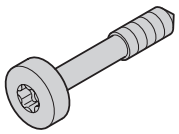 AZA45941	Torx Collar screw	For mounting of front panels when using threaded inserts	St, nickel-plated	M2.5 × 12.3	100	**21101-782**
			St, zinc-plated, black	M2.5 × 12.3	100	**21101-783**
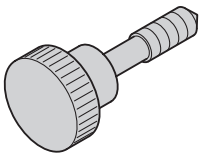 aza45929	Collar screw with knurled head	For mounting of front panels when using threaded inserts	Ms, nickel-plated	M2.5 × 12.3	100	**21101-749**
		For mounting of front panels when using threaded inserts for horizontal rails with long lip	Ms, nickel-plated	M2.5 × 12.3	100	**21101-909**

Torx screw, self-forming

Order Information

	Description	Application	Material	Dimension	Qty/PU	Part no.
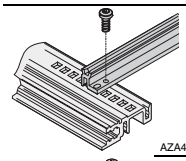 AZA45922	Torx Panhead screw	For extra-robust Al guide rails	St, zinc-plated, black	2.5 × 7.3	100	**24560-157**
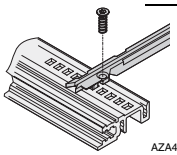 AZA45922	Torx Countersunk screw	For 4.4" board height, guide rail on horizontal rail, europacPRO, ratiopacPRO	St, zinc-plated	2.5 × 7.7	100	**24560-158**
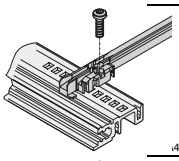 45922	Torx Panhead screw	For plastic guide rail on horizontal rail for panel bracket on horizontal rail	St, zinc-plated	2.5 × 9.3	100	**24560-141**
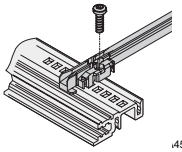 45922	Torx Panhead screw, self-locking	For plastic-guide rails on horizontal rails	St, zinc-plated	2.5 × 9.3	100	**21500-039**
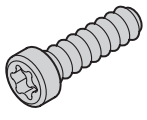 AZA45922	Torx Panhead screw	For 6 U splitting extrusion, backplane mounting centre horizontal rail	St, zinc-plated	2.5 × 10	100	**24560-179**

Part number in bold face type: ready for despatch within 2 working days
Part number in normal type: ready for despatch within 10 working days

Countersunk screws

Order Information

	Description	Application	Material	Dimension	Qty/PU	Part no.
 AZA46585	Torx screw	For contact strips europacPRO, ratiopacPRO	St, zinc-plated	M4 × 5	100	**24560-139**
		For mixed board assembly and assembly of shortened horizontal rail on support member, with GND/earthing function	St, zinc-plated	M4 × 14	100	**24560-145**

Torx Panhead screws

Order Information

	Description	Application	Material	Dimension	Qty/PU	Part no.
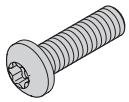 aza45940	Torx Countersunk screw	For Z-rails and connector assembly	St, nickel-plated	M2.5 × 7	100	**24560-147**
		For perforated rail	St, nickel-plated	M2.5 × 10	100	**24560-148**
		For backplane fixing	St, nickel-plated	M2.5 × 12	100	**24560-161**
			St, nickel-plated	M2.5 × 14	100	**24560-162**
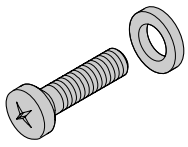 aza45940	Screw + securing washer	For backplane fixing	St, nickel-plated	M2.5 × 12	100	**21100-777**
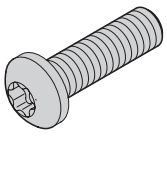 aza45940	Torx Panhead screw	To screw on support bracket, rear hood, rear angle on side panel, extension bracket and adapter bracket	St, zinc-plated	M4 × 6	100	**24560-135**
		To bolt-on cover plate or mounting plate, with GND/earthing function	St, zinc-plated	M4 × 6	100	**24560-151**
		To bolt-on cover plate or mounting plate, with GND/earthing function, self-tapping thread	St, zinc-plated	M4 × 6	100	**21101-884**
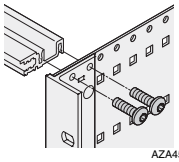 AZA45922		For horizontal rail on side panel if guide rails are bolted to slot 1	St, zinc-plated	M4 × 10	100	**24560-155**
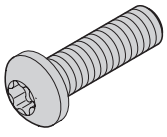 aza45940		For horizontal rail on side panel, with GND/earthing function	St, zinc-plated	M4 × 14	10	**24560-131**
		For horizontal rail on side panel, with GND/earthing function	St, zinc-plated	M4 × 14	100	**24560-130**

Grub screws

Order Information

	Description	Application	Material	Dimension	Qty/PU	Part no.
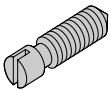 06702053	Grub screw	For threaded inserts M2.5 and perforated strips	Stainless steel	M2.5 × 9	100	**21101-359**
		For threaded inserts M2.5	St, nickel-plated	M2.5 × 8	100	**21100-276**
		For threaded inserts M3	St, zinc-plated	M3.0 × 8	100	**21100-646**

Square nuts

Order Information

	Description	Application	Material	Dimension	Qty/PU	Part no.
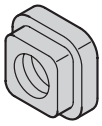 AZA45921	Square nut	To attach: parts to side panels, support profiles, mounting plates	St, zinc-plated	M4	100	**24560-140**

Assembly kits

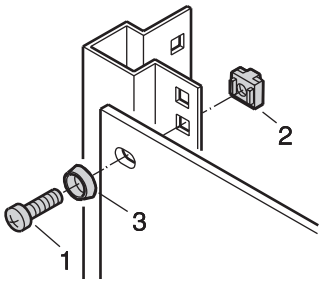

SC128XXX

- For assembly of subracks in cabinets or 19" cases
- For assembly of desk-top cases in cabinets by means of 19" brackets

Delivery comprises (kit)

Item	Qty	Description
1	1	Screw M6 × 16, zinc-plated Pozidrive
2	1	Plastic washer, ABS, black
3	1	Cage nut M6, zinc-plated

Order Information

Description	Part no.
PU = 8 × screw, washer, nut	**21100-435**
PU = 50 × screw, washer, nut	**21101-809**
PU = 100 × screw, washer, nut	**21101-810**

- For 19" brackets with material thickness of 1.5 mm, see assembly kits in chapter Cabinet accessories

Part number in bold face type: ready for despatch within 2 working days
Part number in normal type: ready for despatch within 10 working days

Slide, movable, to accept 2 nuts

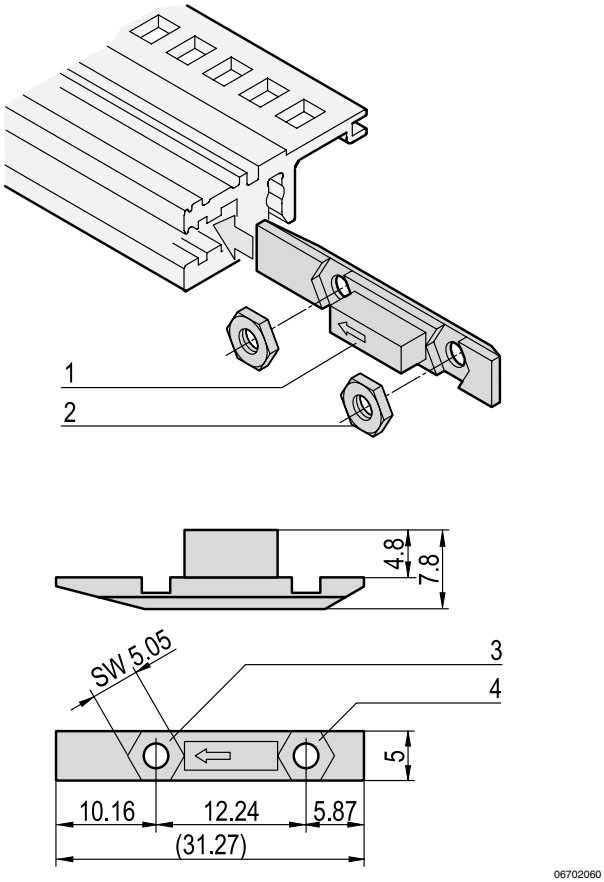

- The slide is pushed into the groove of the horizontal rail to front or rear (type VT)

Delivery comprises (kit)

Item	Qty	Description
1	1	Slide, PBT, red, UL 94 V-0
2	2	Nut, M2.5, St, zinc-plated

Order Information

Description		Part no.
Slide nut kit 1	100 slides/200 nuts	**24560-165**
Slide nut kit 2	12 slides/24 nuts	**24560-166**

Note

- Nuts used in item 3, suitable for:
  - hinged front panels, 84 HP
  - front or rear panels, 84 HP
- Nuts used in item 4, suitable for:
  - hinged front panels
- Nuts used in item 3 and 4, suitable for:
  - two front panels

For further information www.schroff.biz/oneclick
oneClick search code = Part no.

Assembly tool

Order Information

	Description	Application	Dimension	Qty/PU	Part no.
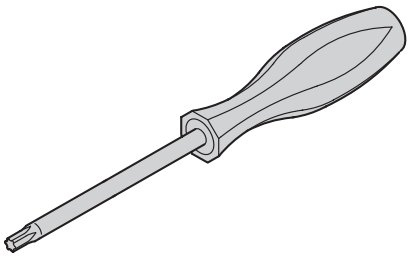 AZA45925	Torx screwdriver	For M2.5 screw	T8 × 60	1	**64560-026**
		For M4 screw	T20 × 100	1	**64560-027**
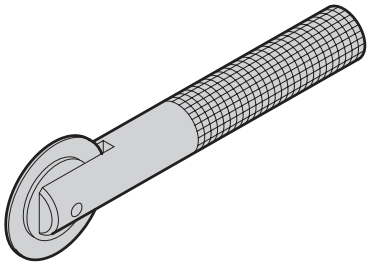 aza45938	Assembly tools	Exclusively to fix stainless steel EMC gaskets in horizontal rails	–	1	**24560-271**
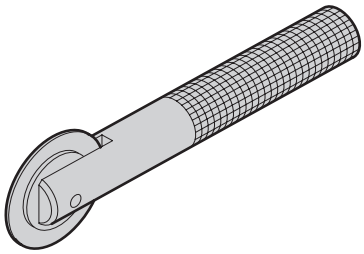 aza45937	Assembly tools	For fitting EMC seals (steel, stainless) in front panels with lateral slot	–	1	**24560-270**

Note

- Assembly tool for insertion of keying/coding pegs in board guides is available on request

Measuring tape

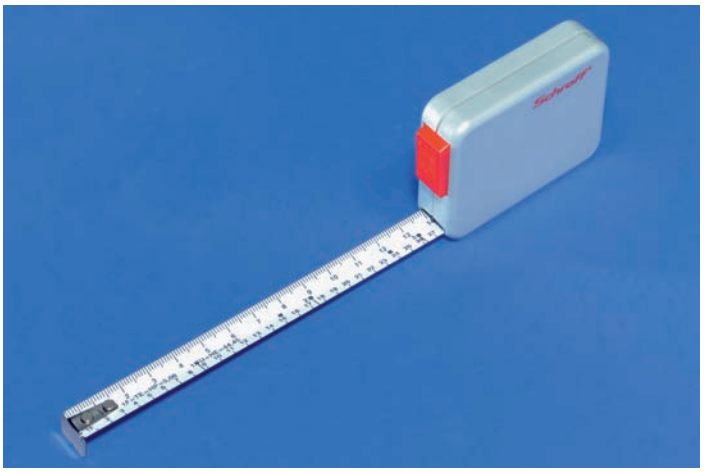
32506001

- Measuring tape with cm, U-, HP-division (lenght 2 m)
- Plastic cases, metal measuring tape with automatic collection

Order Information

Description	Qty/PU	Part no.
Measuring tape	1	**89009-001**

Part number in bold face type: ready for despatch within 2 working days
Part number in normal type: ready for despatch within 10 working days

Application examples

Application: applications in the transportation/defence sectors



06108006

- Mounting frame to accept a 36 HP wide railway subrack, frame in stainless steel

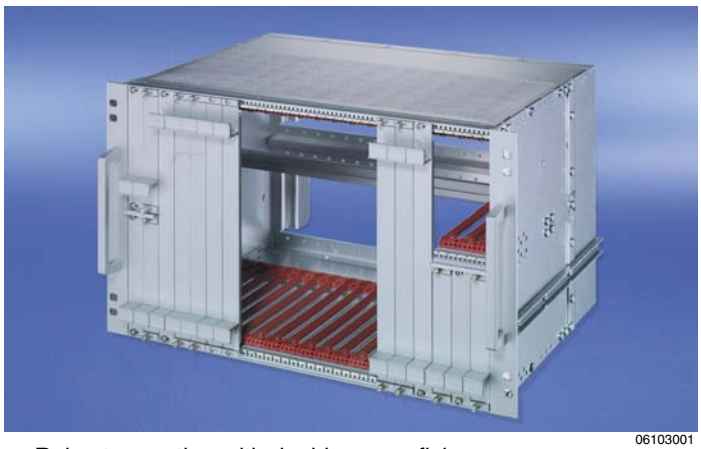

06103001

- Robust mounting with double screw fixing
- Lateral ducting in cabinet
- Combined mounting 6 U + 2 x 3 U

Application: applications in measurement, control and instrumentation sectors

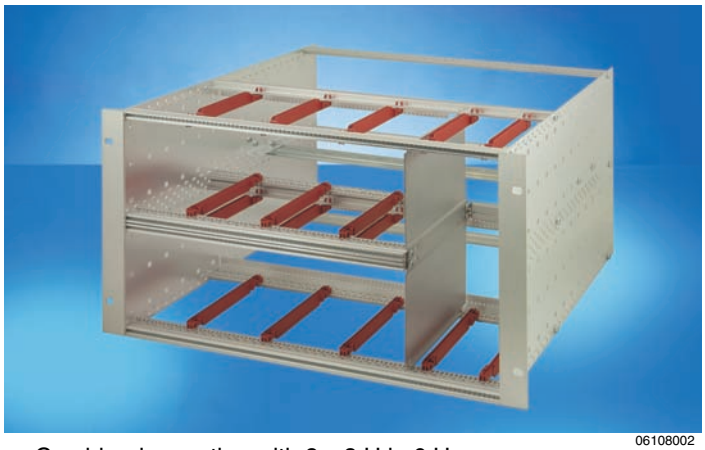

06108002

- Combined mounting with 2 x 3 U in 6 U
- Divider plate to separate different sections
- Construction with reinforced guide rails



06108003

- Subrack with additional pull-out fan unit
- Adaptation in bottom and top of side panel integrated

Application: applications in telecom sectors



06108004

- Recessed front panels for cable ducting
- Folding front panel to cover the cables of the recessed plane



06101005

- Subrack with plastic cable ducting for fibre-optic cable/fibres
- Connector insertion area at top

Overview 0
Cabinets 1
Wall mounted cases 2
Accessories for cabinets and wall mounted cases 3
Climate control 4
Desk-top cases 5
Subracks/ 19" chassis 6
Front panels, plug-in units 7
Systems 8
Power supply units 9
Backplanes 10
Connectors, front panel component system 11
Appendix 12

Subracks – for railway applications

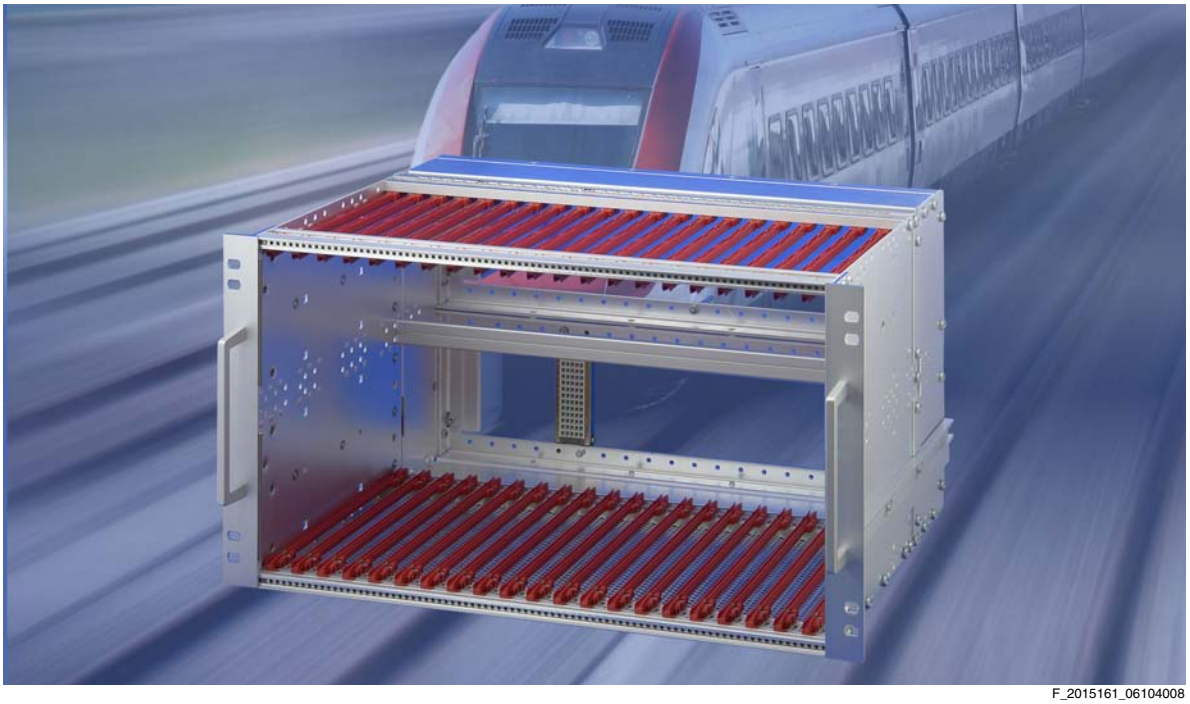

F_2015161_06104008

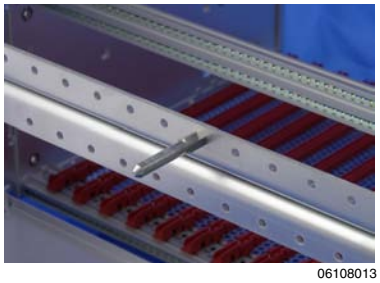

06108013

An alignment pin (in accordance with the NFF standard) allows the easy installation of the subracks

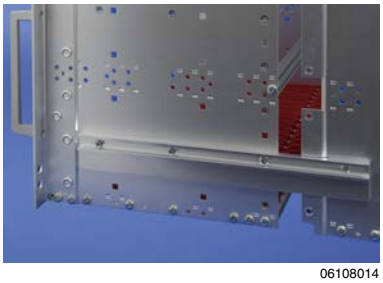

06108014

Lateral support bars (in accordance with the NFF standard) facilitate to slide in the subrack into the (cabinet) frame

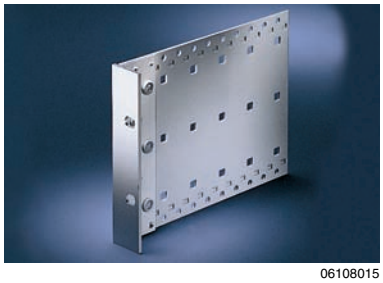

06108015

The 19" bracket is firmly fixed to the side panel (Tox-cold welded) and especially suited for high mechanical stresses (vibration resistance)

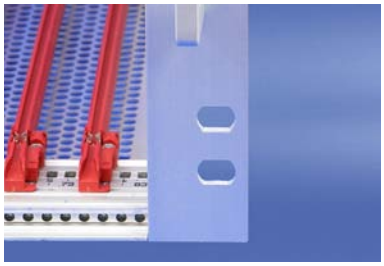

06108016

The double 19" fixing position adds to additional safety (NFF standard)



06108017

The cut-out in the side panel allows to retro-fit the threaded insert, also if the side panels are already assembled

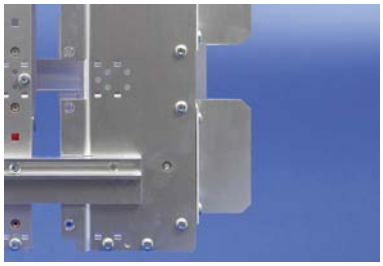

06108015

The rear brackets have two functions:
- push-in aid and
- transport protection for the connectors

The removable rear hood allows a fast cabling between backplane and the connector

Downloads and further important information can be found on the Internet under www.schroff.biz

Subracks – for railway applications

Overview 6.74

19" subrack for mobile rail applications

- **Unshielded and shielded versions**
- **Shock and vibration resistant to IEC 61587-1, EN 50155, NF F 61-005/NF F 60-002, BN 411002 and BN 411003**
- **Versions for CompactPCI applications**
- **Front shielding is provided by EMC sealing (textile)**

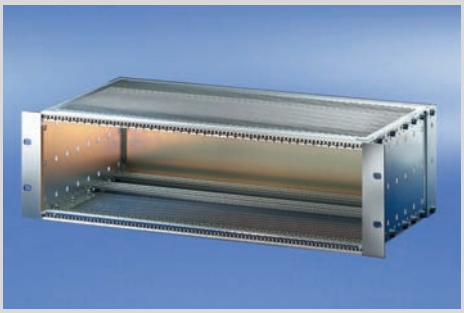

06102008

BN 411002, 411003 Subracks

- 3 U and 6 U
- 84 HP
- Unshielded and shielded versions
- Tox-cold welded side panels

BN 411002/-003 subracks
unshielded 6.77
shielded 6.78



06104006

EN 50155 subrack

- 3 U and 6 U
- 84 HP
- Unshielded and shielded versions
- Shielded versions for CompactPCI applications

EN 50155 subracks
unshielded 6.79
shielded 6.80
shielded, for CompactPCI 6.81



06104003

SNCF subrack

- 3 U and 6 U
- 9 T (36 HP) and 21 T (84 HP)
- Unshielded and shielded versions
- Shielded versions for CompactPCI applications

SNCF subracks
unshielded 6.82
shielded 6.83
shielded, for CompactPCI 6.84

Accessories . .
Guide rails 6.85
Cover plates 6.86

General accessories in europacPRO section 6.17



30407004

ServicePLUS from page 6.88

e.g. modifications (cut-outs)
e.g. downloads (CAD drawings, user manuals, test reports)
e.g. custom solutions (special sizes)

www.schroff.biz/serviceplus/

ServicePLUS . 6.88
Application examples 6.89

Subracks – *europac PRO* for railway applications

Subrack for mobile rail applications



Solid mechanical construction
Electronic systems for mobile applications require robust mechanical construction that can withstand even extreme environmental conditions. Our enclosure solutions protect the electronics within with their high mechanical stability, thus making an important contribution to the secure and trouble-free functioning of the system overall. Only dependability, down to the last detail, can make complex safety tasks achievable - and also economic.

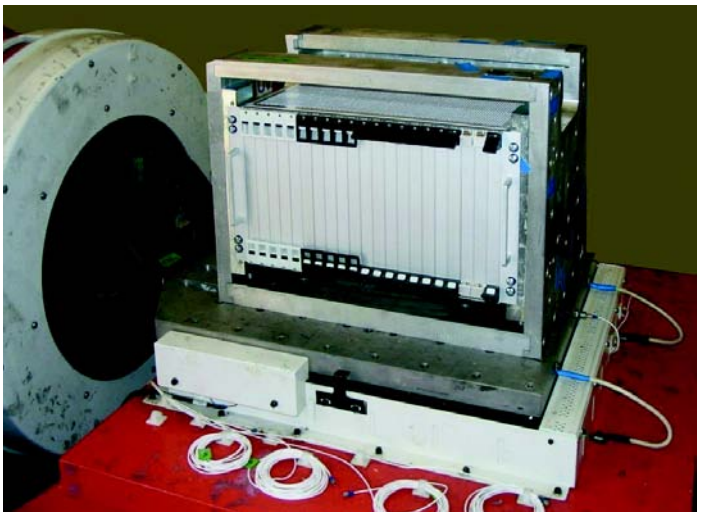

Shock and vibration resistance
Schroff products assure shock and vibration resistance in mobile situations, e.g. with appropriate material thicknesses and fixing elements. Tested with typical installed loads, they offer the best conditions for a secure and dependable presence in individual applications and projects.

Certification of mechanics
High-quality, robust and durable products are an important component for the certification of a complete application in accordance with the European Railway Standard DIN EN 50155, the German Railway Standards BN 411002 and BN 411003 and the French Railway Standards NF F 61-005 and NF F 60-002.

Note
fer = ferroviaire (French) = railway
1 T = 4 HP = 20.32 mm

Railway Technology brochure
You will find extensive general information on our solutions for rail traffic at **www.schroff.co.uk/railway/** and in our Railway Technology brochure.



TÜV test report



30608002

Part number in bold face type: ready for despatch within 2 working days
Part number in normal type: ready for despatch within 10 working days

Kit, unshielded, 'heavy', for backplane mounting

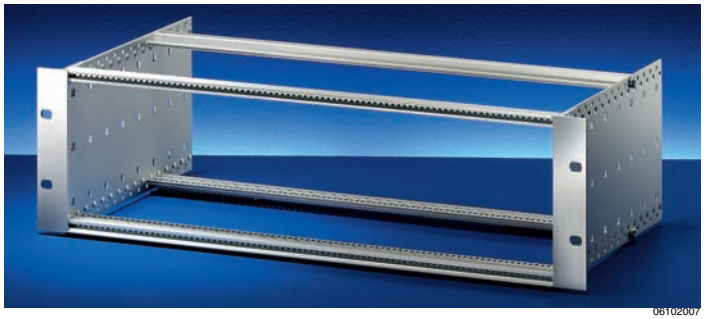

- Subrack in robust version ("heavy"), 19" bracket is firmly joined to side panel (Tox-cold welded)
- Rear horizontal rail with insulation strip for backplane mounting
- Tested to German railway standard BN 411002, BN 411003

NEW

Delivery comprises (Kit)

Item	Qty 3 U	Qty 6 U	Description
1	2	2	Type H (heavy) side panel with 19" support bracket for EMC textile gasket
2a	2	2	Front horizontal rail (H-KD)
2b	2	2	Rear horizontal rail (H-ST) with insulation strip for backplane mounting
2c	-	1	Centre horizontal rail (ST)
3	4	6	Threaded insert (pre-fitted)
4	2	4	Insulation strip (pre-fitted)
5	1	1	Assembly kit
6	1	1	User manual

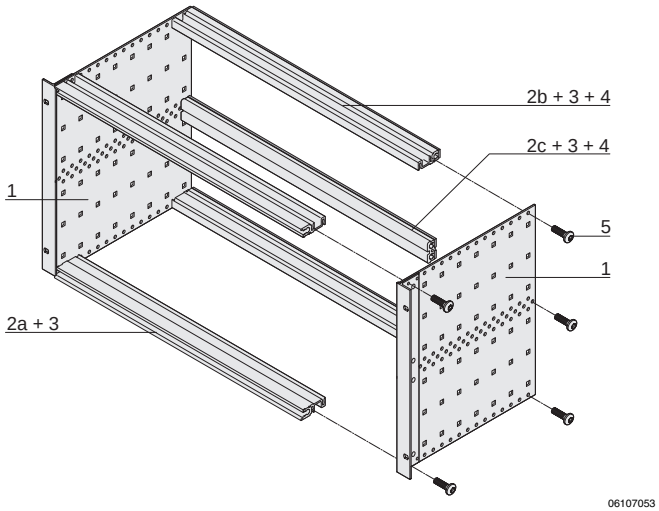

6 U

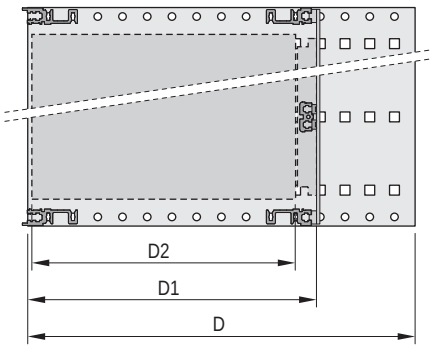

D=total depth, D1=insertion depth, D2=board depth

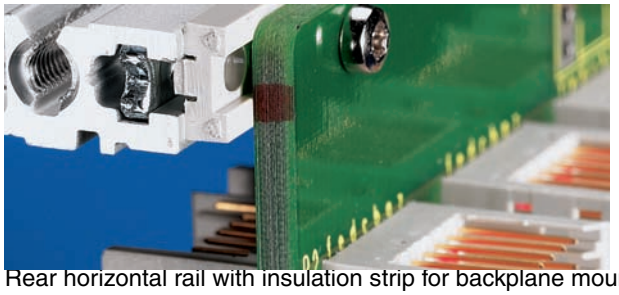

Rear horizontal rail with insulation strip for backplane mounting

Order Information

Height U	Width HP	Depth D mm	Depth D1 mm	Depth D2 mm	Part no.
3	84	175	175	160	**24563-161**
3	84	235	175/235	160/220	**24563-162**
3	84	295	175/235/295	160/220/280	**24563-163**
3	84	355	175/235/295/355	160/220/280/340	**24563-164**
6	84	175	175	160	**24563-461**
6	84	235	175/235	160/220	**24563-462**
6	84	295	175/235/295	160/220/280	**24563-463**
6	84	355	175/235/295/355	160/220/280/340	**24563-464**
Assembly kit, PU 8 x screw, washer, nut for assembly of subracks in a 19" case or a cabinet					**21100-435**

Guide rails (standard), ESD clip

Depth D2 mm	Qty/PU	Part no.
160	10	**24560-351**
220	10	**24560-353**
280	10	**24560-379**
340	10	**24560-380**
ESD clip for guide rails PU 50 pieces		**24560-255**
Pan head screw with Torx, for extra bolting of the guide rails, 2.5 × 9.3, zinc-plated, PU 100 pieces		**24560-141**

Note

- EMC textile gaskets see page 6.23
- Further accessories see from page 6.17
- ServicePLUS configuration from page 6.88

ServicePLUS see page 6.88

For further information www.schroff.biz/oneclick
oneClick search code = Part no.

Kit, shielded, "heavy", for backplane mounting

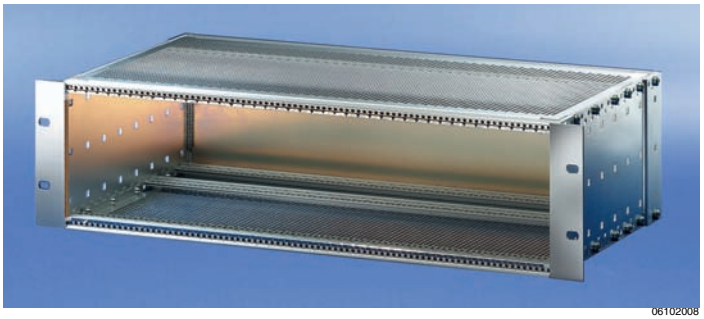

06102008

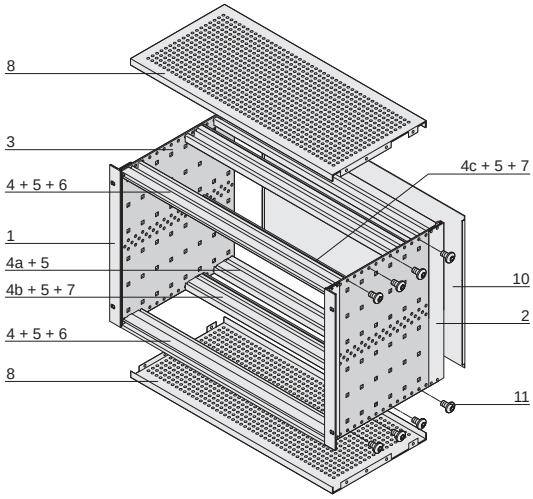

06107055

6 U

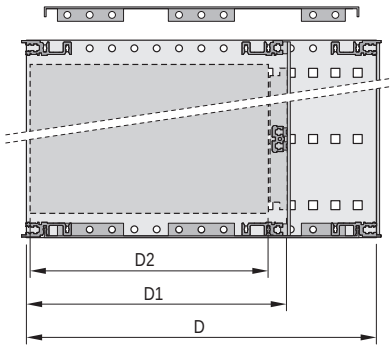

06108060

D=total depth, D1=insertion depth, D2=board depth

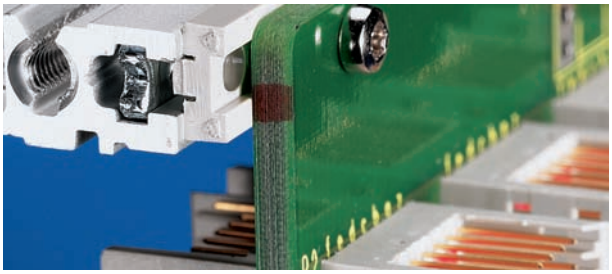

04400001

Rear horizontal rail with insulation strip for backplane mounting

ServicePLUS see page 6.88

- Subrack in robust version ("heavy"), 19" bracket is firmly joined to side panel (Tox-cold welded)
- Rear horizontal rail with insulation strip for backplane mounting
- Typical shielding 40 dB at 1 GHz, 30 dB at 2 GHz (in accordance with VG 95373, part 15), on condition that the front is sealed with shielded front panels
- Tested to German railway standard BN 411002, BN 411003

NEW

Delivery comprises (Kit)

Item	Qty 3 U	Qty 6 U	Description
1	2	2	19" support bracket for **EMC textile gasket**
2	2	2	Corner profile to rear for **EMC textile gasket**
3	2	2	Side panel type H
4	2	2	Front horizontal rail (H-KD)
4 a	2	2	Rear horizontal rail (H-KD)
4 b	2	2	Rear horizontal rail (H-ST) with insulation strip for backplane mounting
4 c	-	1	Centre horizontal rail (ST)
5	6	8	Threaded insert (pre-fitted)
6	2	2	Perforated strip (pre-fitted)
7	2	4	Insulation strip (pre-fitted)
8	2	2	EMC cover plate
9	1	1	EMC gasketing material (pre-fitted)
10	1	1	Rear panel
11	1	1	Assembly kit
12	1	1	User manual

Order Information

Height U	Width HP	Depth D mm	Depth D1 mm	Depth D2 mm	Part no.
3	84	235	175/235	160/220	**24563-172**
3	84	295	175/235/295	160/220/280	**24563-173**
3	84	355	175/235/295	160/220/280	**24563-174**
6	84	235	175/235	160/220	**24563-472**
6	84	295	175/235/295	160/220/280	**24563-473**
6	84	355	175/235/295	160/220/280	**24563-474**
Assembly kit, PU 8 x screw, washer, nut for assembly of subracks in a 19" case or a cabinet					**21100-435**

Guide rails (standard), ESD clip

Depth D2 mm	Qty/PU	Part no.
160	10	**24560-351**
220	10	**24560-353**
280	10	**24560-379**
ESD clip for guide rails PU 50 pieces		**24560-255**
Pan head screw with Torx , for extra bolting of the guide rails, 2.5 × 9.3, zinc-plated, PU 100 pieces		**24560-141**

- Perforated rail for connectors see page 6.33
- Further accessories see from page 6.17
- ServicePLUS configuration from page 6.88

Kit, EN 50155, unshielded

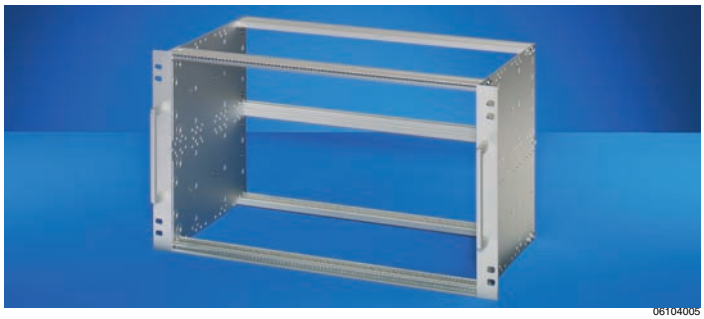

- For mobile railway applications
- Tested in accordance with EN 50155
- 3 U and 6 U, 84 HP, 235 mm deep, for board depths of 220 mm

Delivery comprises (kit)

Item	Qty		Description
	3 U	6 U	
1	2	2	Side panel type H incl. 19" support bracket prepared for EMC textile gasket
2	2	2	Front horizontal rail (H-KD)
2 a	2	2	Rear horizontal rail (H-VT)
2 b	-	1	Rear centre horizontal rail (VT)
3	4	6	Threaded inserts
4	2	2	Handles
5	1	1	Assembly kit with self-locking screws
6	1	1	User manual

3 U

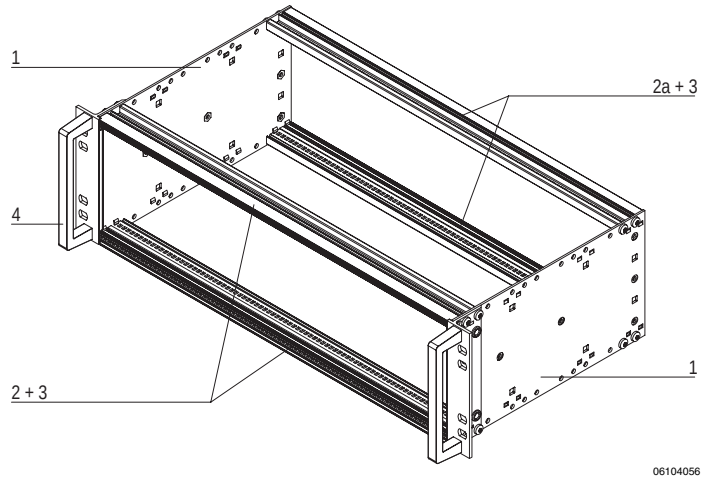

6 U

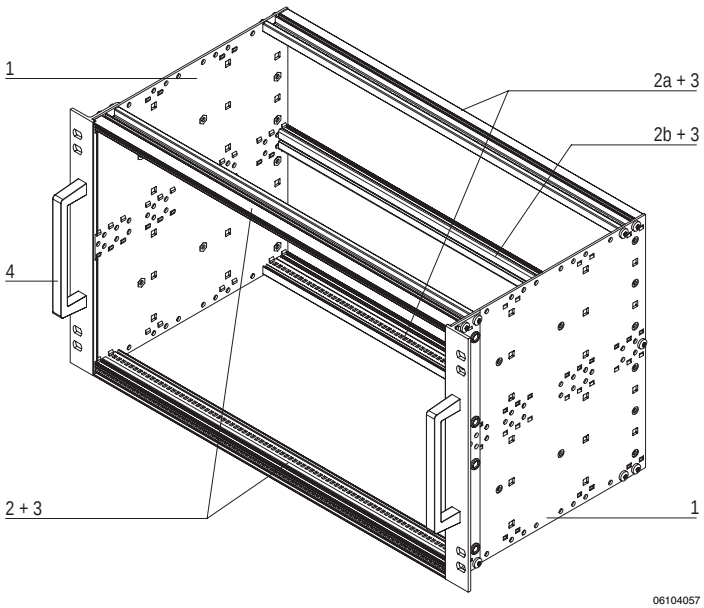

Order Information

Height	Width	Depth	Part no.
U	HP	mm	
3	84	235	**21500-077**
6	84	235	**21500-078**
Guide rail, standard, 220 mm deep PBT, UL 94 V-0, red, groove width 2 mm, PU 10 pieces, see page 6.34	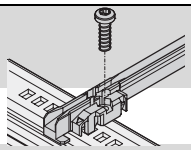		**24560-353**
Pan head screw with Torx 2.5 × 9.3, zinc-plated, PU 100 pieces			**24560-141**
ESD clip for guide rails PU 50 pieces			**24560-255**
Cover plate for screw-fixing onto side panel width 84 HP, depth 220 mm, PU 1 kit			**21500-037**
Assembly kit, PU 8 x screw, washer, nut for assembly of subracks in a 19" case or a cabinet			**21100-435**

Note

- Test reports online
- ServicePLUS configuration, see from page 6.88
- Further accessories see from page 6.17

For further information www.schroff.biz/oneclick
oneClick search code = Part no.

ServicePLUS see page 6.88

Subracks – *europac PRO* for railway applications

Kit, EN 50155, shielded



- For mobile railway applications
- Tested in accordance with EN 50155
- 3 U and 6 U, 84 HP, 235 mm deep, for board depths of 220 mm

Delivery comprises (kit)

Item	Qty 3 U	Qty 6 U	Description
1	2	2	Side panel type H incl. 19" support bracket with textile EMC gasket
2	2	2	Front horizontal rail (H-KD)
2 a	2	2	Rear horizontal rail (H-VT)
2 b	-	1	Rear centre horizontal rail (VT)
3	4	6	Threaded inserts
4	2	2	Perforated strip
5	2	2	EMC cover plate 235 T
6	1	1	EMC gasketing kit
7	1	2	EMC gasketing kit for backplanes
8	2	2	Handles
9	1	1	Assembly kit with self-locking screws
10	1	1	User manual

3 U

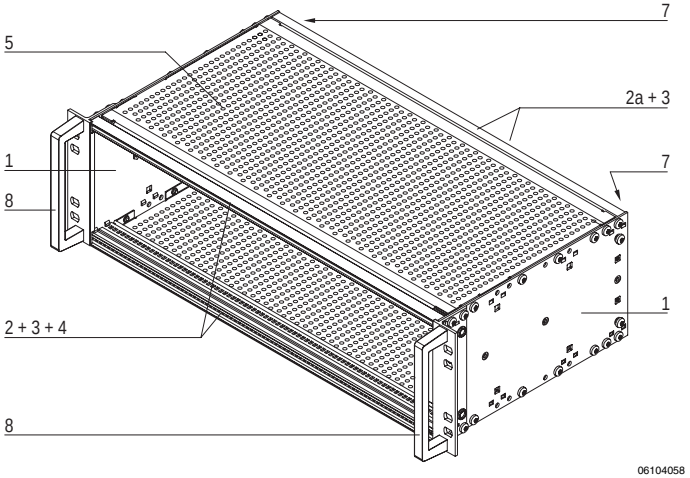

6 U

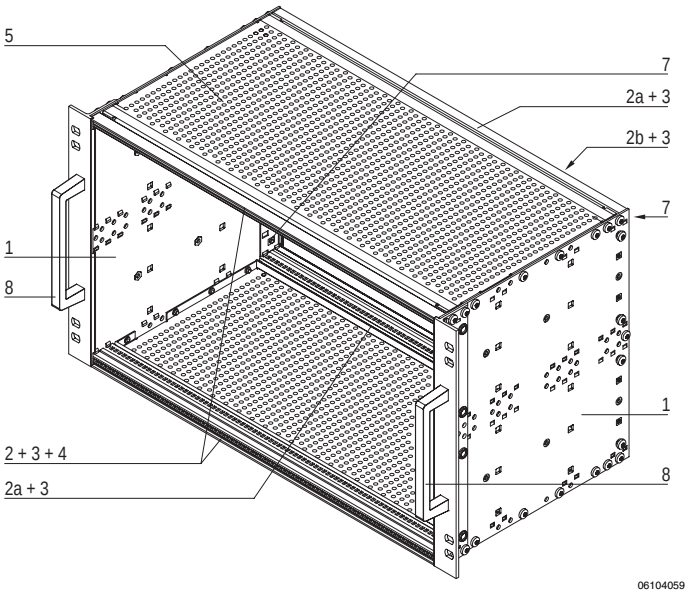

Order Information

Height U	Width HP	Depth mm	Part no.
3	84	235	**21500-079**
6	84	235	**21500-080**
Guide rail, standard, 220 mm deep PBT, UL 94 V-0, red, groove width 2 mm, PU 10 pieces, see page 6.34	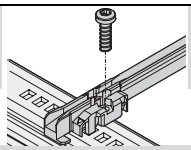		**24560-353**
Pan head screw with Torx 2.5 × 9.3, zinc-plated, PU 100 pieces			**24560-141**
ESD clip for guide rails PU 50 pieces			**24560-255**
Assembly kit, PU 8 x screw, washer, nut for assembly of subracks in a 19" case or a cabinet			**21100-435**

Note

- Test reports online
- ServicePLUS configuration, see from page 6.88
- Further accessories see from page 6.17

For further information www.schroff.biz/oneclick
oneClick search code = Part no.

ServicePLUS see page 6.88

Part number in bold face type: ready for despatch within 2 working days
Part number in normal type: ready for despatch within 10 working days

Kit, EN 50155, shielded, for CompactPCI applications



- For mobile railway applications
- Tested in accordance with EN 50155
- 3 U and 6 U, 84 HP, 235 mm deep, for board depths of 160 mm
- Subrack in accordance with IEEE 1101.10

Delivery comprises (kit)

Item	Qty 3 U	Qty 6 U	Description
1	2	2	Side panel type H incl. 19" support bracket with textile EMC gasket
2	1	-	Front horizontal rail (H-KD)
2 a	2	2	Rear horizontal rail (H-VT)
2 b	-	1	Rear centre horizontal rail (VT)
2 c	1	2	Front horizontal rail (H-LD)
3	4	6	Threaded inserts
4	2	2	Perforated strip
5	2	2	EMC cover plate 175 T
6	1	1	EMC gasketing kit
7	1	2	EMC gasketing kit for backplanes
8	2	2	Handles
9	1	1	Assembly kit with self-locking screws
10	1	1	User manual

3 U

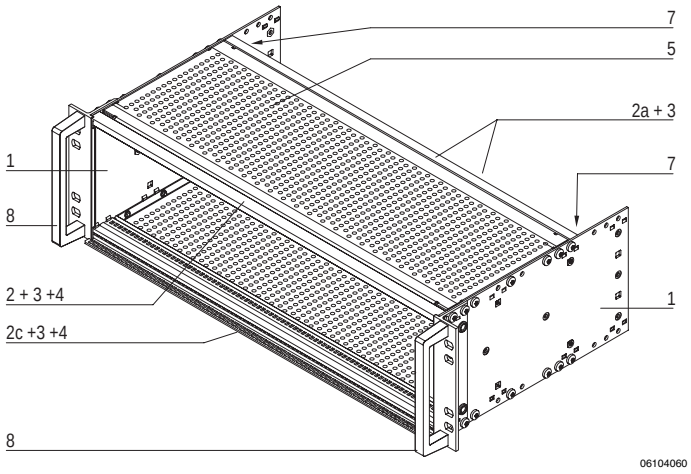

6 U

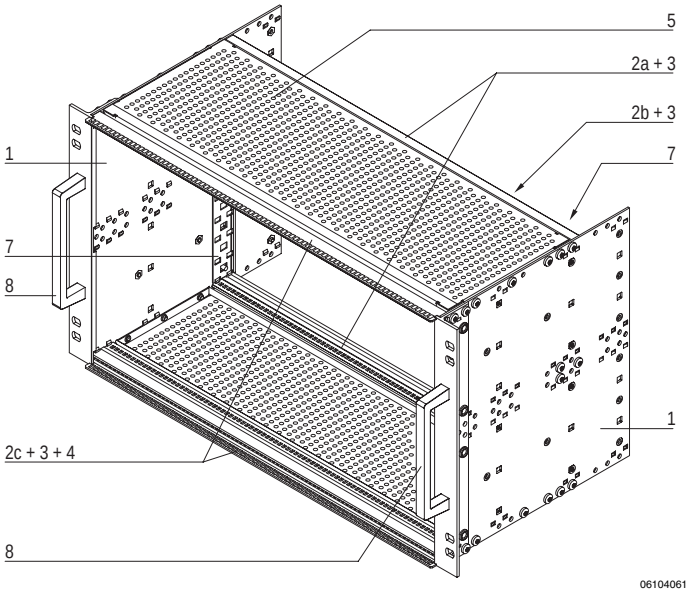

Order Information

Height U	Width HP	Depth mm	Part no.
3	84	235	**21500-081**
6	84	235	**21500-082**
Assembly kit, PU 8 x screw, washer, nut for assembly of subracks in a 19" case or a cabinet			**21100-435**

Note

- Please order guide rails and ESD clips separately, see page 6.85
- Test reports online
- Rear hood see page 6.87
- ServicePLUS configuration, see from page 6.88
- Further accessories see from page 6.17

For further information www.schroff.biz/oneclick
oneClick search code = Part no.

ServicePLUS see page 6.88

Kit SNCF, unshielded

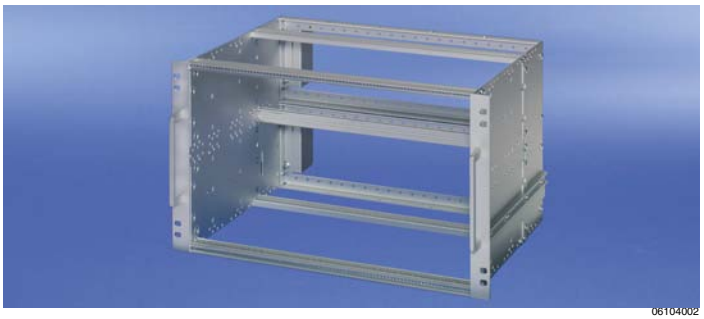

- For mobile railway applications
- SNCF listed, europacPRO-fer, tested to NF F 61-005 and NF F 60-002
- 3 U and 6 U, 9 T and 21 T, 320 mm deep, for board depths of 220 mm

Delivery comprises (kit)

Item	Qty 3 U	Qty 6 U	Description
1	2	2	Side panel type H incl. 19" support bracket prepared for EMC textile gasket
2	2	2	Side panel extension
3	2	2	Guide rail on the outside
4	2	2	Front horizontal rail (H-KD)
4 a	2	2	Rear horizontal rail (H-VT)
4 b	-	1	Rear centre horizontal rail (VT)
5	4	6	Threaded inserts
6	1	2	Rear frame 3 U, 21 T
7	2	4	Protective bracket SNCF
8	2	2	Handle
9	1	1	Assembly kit with self-locking screws
10	1	1	User manual

3 U

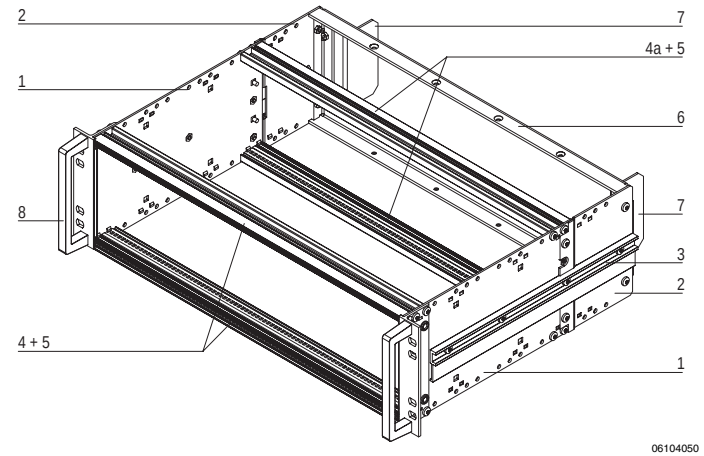

6 U

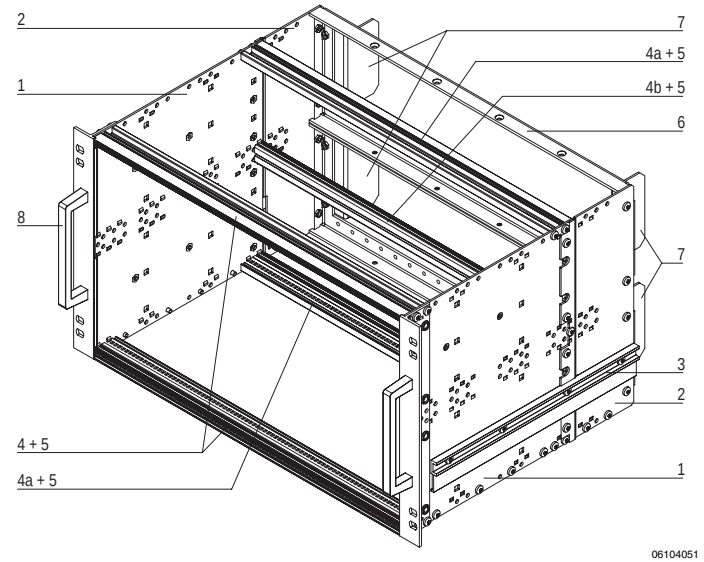

Coding pin

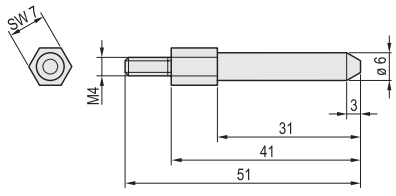

Order Information

Width mm	Height U	Depth mm	Part no.
36 HP (9 T)	3	320	21500-067
36 HP (9 T)	6	320	21500-070
84 HP (21 T)	3	320	**21500-029**
84 HP (21 T)	6	320	**21500-027**
Guide rail, standard, 220 mm deep PBT, UL 94 V-0, red, groove width 2 mm, PU 10 pieces, see page 6.85			**24560-353**
Pan head screw with Torx 2.5 × 9.3, zinc-plated, PU 100 pieces			**24560-141**
ESD clip for guide rails PU 50 pieces			**24560-255**
Coding pin for rear frame, St, white zinc-plated, 1 piece			**60895-018**
Assembly kit, PU 8 x screw, washer, nut for assembly of subracks in a 19" case or a cabinet			**21100-435**

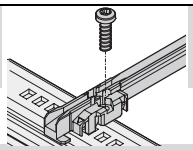

Note

- fer = ferroviaire = French railways, 1 T = 4 HP = 20.32 mm
- Subrack receptacle/mounting frame in stainless steel 9 T or 21 T available on request
- Test reports online
- Cover plates for screw-fixing onto side panel see page 6.86
- ServicePLUS configuration, see from page 6.88
- Further accessories see from page 6.17

For further information www.schroff.biz/oneclick
oneClick search code = Part no.

ServicePLUS see page 6.88

Part number in bold face type: ready for despatch within 2 working days
Part number in normal type: ready for despatch within 10 working days

Kit SNCF, shielded



06104003

- For mobile railway applications
- SNCF listed, europacPRO-fer, tested to NF F 61-005 and NF F 60-002
- 3 U and 6 U, 9 T and 21 T, 320 mm deep, for board depths of 220 mm

3 U

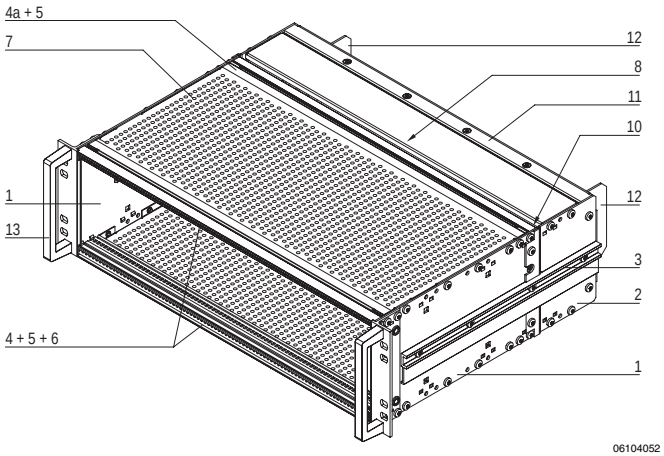

06104052

6 U

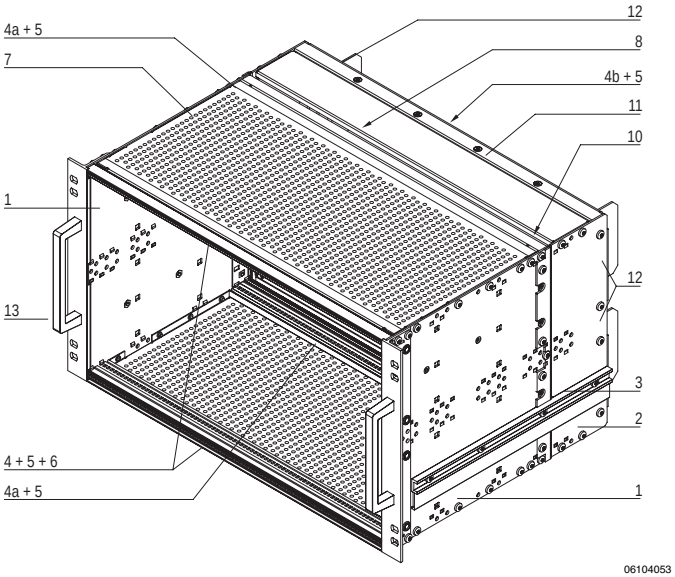

06104053

Coding pin

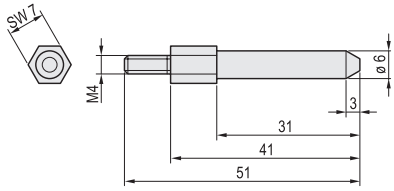

06104062

Delivery comprises (kit)

Item	Qty 3 U	Qty 6 U	Description
1	2	2	Side panel type H incl. 19" support bracket with textile EMC gasket
2	2	2	Side panel extension
3	2	2	Guide rail on the outside
4	2	2	Front horizontal rail (H-KD)
4 a	2	2	Rear horizontal rail (H-VT)
4 b	-	1	Rear centre horizontal rail (VT)
5	4	6	Threaded inserts
6	2	2	Perforated strips
7	2	2	EMC cover plate 235 T
8	2	2	Rear cover plate 55 T
9	1	1	EMC gasketing kit
10	1	2	EMC gasketing kit for backplanes
11	1	2	Rear frame, 3 U, 21 T
12	2	4	Protective bracket SNCF
13	2	2	Handles
14	1	1	Assembly kit with self-locking screws
15	1	1	User manual

Order Information

Width	Height U	Depth mm	Part no.
36 HP (9 T)	3	320	21500-068
36 HP (9 T)	6	320	21500-071
84 HP (21 T)	3	320	**21500-030**
84 HP (21 T)	6	320	**21500-028**
Guide rail, standard, 220 mm deep PBT, UL 94 V-0, red, groove width 2 mm, PU 10 pieces, see page 6.85	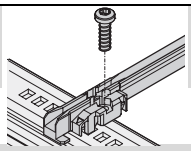		**24560-353**
Pan head screw with Torx 2.5 × 9.3, zinc-plated, PU 100 pieces			**24560-141**
ESD clip for guide rails PU 50 pieces			**24560-255**
Coding pin for rear frame, St, white zinc-plated, 1 piece			**60895-018**
Assembly kit, PU 8 x screw, washer, nut for assembly of subracks in a 19" case or a cabinet			**21100-435**

Note

- fer = ferroviaire (French) = railway, 1 T = 4 HP = 20.32 mm
- Subrack receptacle/mounting frame in stainless steel 9 T or 21 T available on request
- Test reports online
- ServicePLUS configuration, see from page 6.88
- Further accessories see from page 6.17

ServicePLUS see page 6.88

Kit, SNCF, shielded, for CompactPCI applications



06104004

- For mobile railway applications
- SNCF listed, europacPRO-fer, tested to NF F 61-005 and NF F 60-002
- 3 U and 6 U, 9 T and 21 T, 320 mm deep, for board depths of 160 mm
- CompactPCI subrack in accordance with IEEE 1101.10

3 U

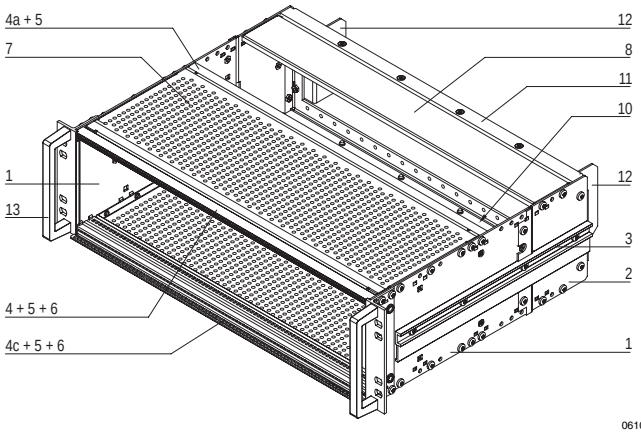

06104054

6 U

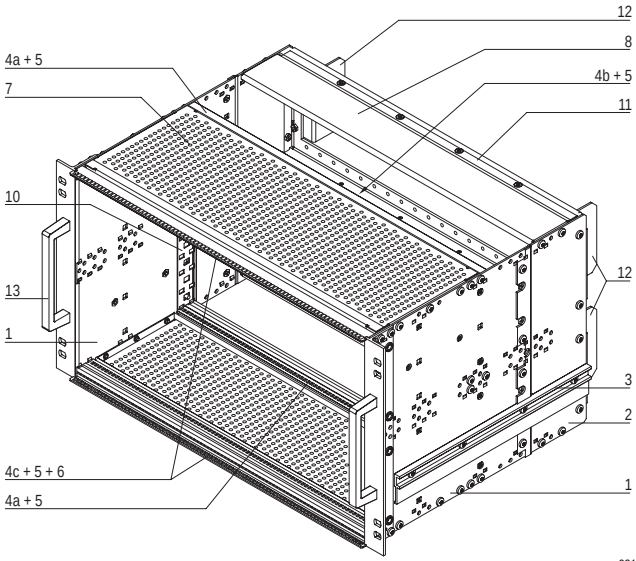

06104055

Coding pin

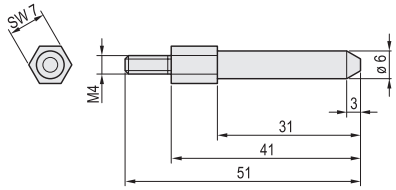

06104062

Delivery comprises (kit)

Item	Qty 3 U	Qty 6 U	Description
1	2	2	Side panel typy H incl. 19" support bracket with textile EMC gasket
2	2	2	Side panel extension
3	2	2	Guide rail on the outside
4	1	-	Front horizontal rail (H-KD)
4 a	2	2	Rear horizontal rail (H-VT)
4 b	-	1	Rear centre horizontal rail (VT)
4 c	1	2	Front horizontal rail (H-LD)
5	4	6	Threaded inserts
6	2	2	Perforated strip
7	2	2	EMC cover plate 175 T
8	2	2	Rear cover plate 55 T
9	1	1	EMC gasketing kit
10	1	2	EMC gasketing kit for backplanes
11	1	2	Rear frame, 3 U, 21 T
12	2	4	Protective bracket SNCF
13	2	2	Handles
14	1	1	Assembly kit with self-locking screws
15	1	1	User manual

Order Information

Width	Height U	Depth mm	Part no.
36 HP (9 T)	3	320	21500-069
36 HP (9 T)	6	320	21500-072
84 HP (21 T)	3	320	**21500-047**
84 HP (21 T)	6	320	**21500-046**
Coding pin for rear frame, St, white zinc-plated, 1 piece			**60895-018**
Assembly kit, PU 8 x screw, washer, nut for assembly of subracks in a 19" case or a cabinet			**21100-435**

Note

- fer = ferroviaire (French) = railway, 1 T = 4 HP = 20.32 mm
- Subrack receptacle/mounting frame in stainless steel 9 T or 21 T available on request
- Please order guide rails and ESD clips separately, see page 6.85
- Test reports online
- ServicePLUS configuration, see from page 6.88
- Further accessories see from page 6.17

ServicePLUS see page 6.88

For further information www.schroff.biz/oneclick
oneClick search code = Part no.

Part number in bold face type: ready for despatch within 2 working days
Part number in normal type: ready for despatch within 10 working days

Guide rails

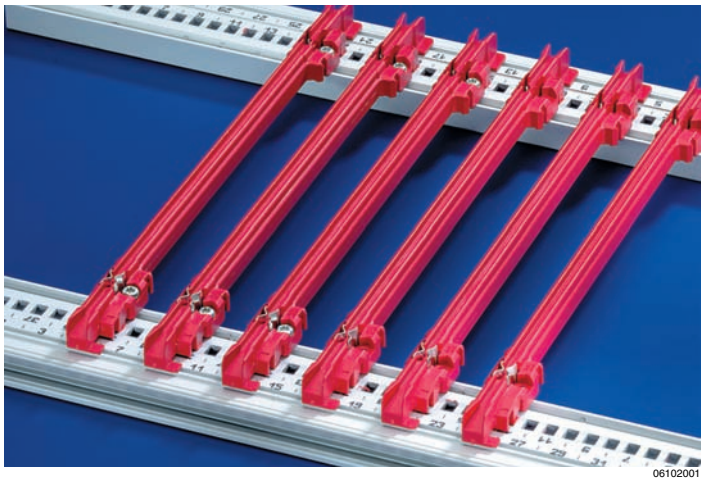
06102001

- Material PBT UL 94 V-0, red, groove width 2 mm, for printed board thickness of 1.6 mm

Order Information

Description	Depth mm	Qty/PU	Part no.
Guide rail, standard, 160 mm deep	160	10	**24560-351**
Guide rail, standard, 220 mm deep	220	10	**24560-353**
ESD clip for guide rails PU 50 pieces			**24560-255**

For further information www.schroff.biz/oneclick
oneClick search code = Part no.

Guide rails with coding for CompactPCI and VME64x

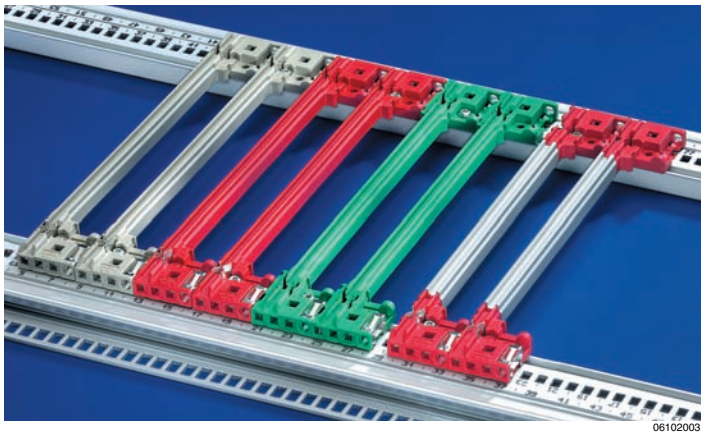
06102003

- The guide rails conform to IEC 60297-3-100 and IEEE 1101.10/11, are 4 HP wide and can be equipped with coding pins
- Material PBT UL 94 V-0, groove width 2 mm, for board thickness 1.6 mm
- Colour:
  - red (CPU board)
  - grey (periphery board)
  - green (CompactPCI power supply, 0.1" offset)

Order Information

Description	Depth mm	Qty/PU	Part no.
Guide rails with coding, red	160	10	**24560-356**
Guide rails with coding, grey	160	10	**24560-358**
Guide rails with coding, green, offset	160	10	**24560-359**
Pan head screw with Torx 2.5 × 9.3, zinc-plated, PU 100 pieces	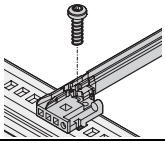		**24560-141**
ESD clip for guide rails PU 50 pieces			**24560-255**
ESD clip for alignment pin of CPCI/VME64x handle PU 50 pieces			**24560-256**
Coding pin PC, UL 94 V-0, RAL 7035, PU 100 pieces			**20817-501**

Guide rails on horizontal rail type H

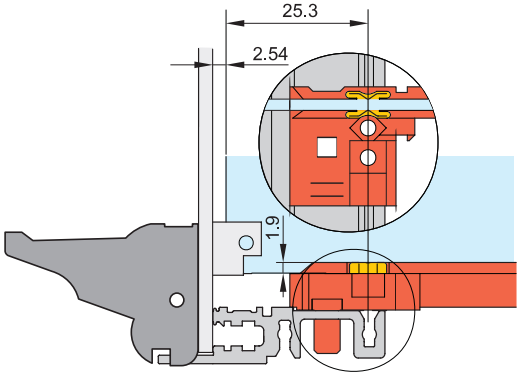

04505050

ESD clip for alignment pin

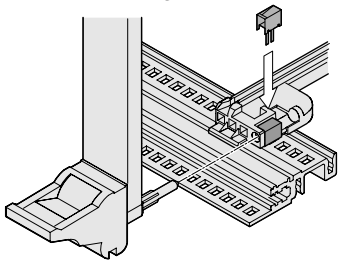
06103052

- More guide rails see page 6.34
- IEL/IET handle for CompactPCI/VME64x handles see chapter Sub-assemblies/plug-in units, page 7.18

Cover plate for screw-fixing onto side panel

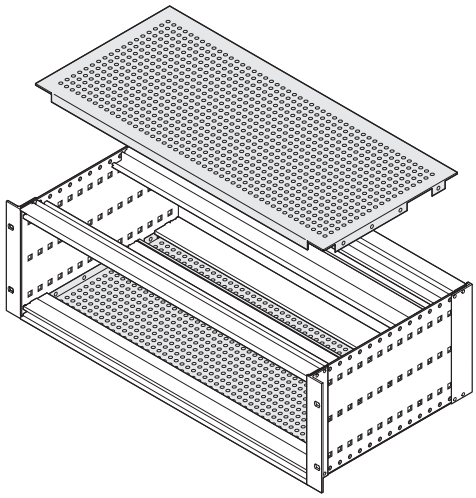

06102084

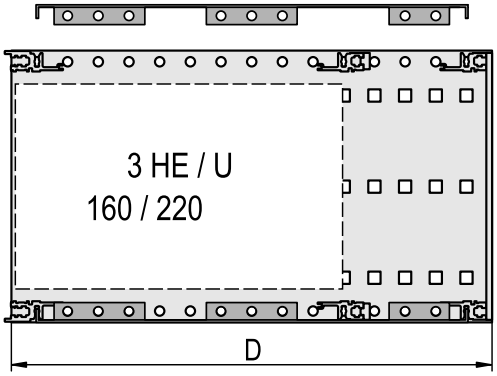

06102082

Side view for 175 mm and 235 mm depths

- Suitable for all horizontal rails
- Cover plate for assembly of 160 mm, 220 mm or 280 mm deep boards
- Lateral notch to mount the horizontal rails in depths of 160 mm or 220 mm
- Shielding by optional EMC stainless steel gaskets, between cover plate and horizontal rail

Delivery comprises

Item	Qty	Description
1	2	Cover plate, Al, 1.0 mm, clear chromated, hole diameter 4.0 mm, (no perforation at 55 mm depth)
2	16/32	Torx screws 4 x 6 pentaform, St, zinc-plated

Order Information

Width HP	Depth D mm	Application	Part no.
84	55	–	**21500-038**
84	175	160	**21500-048**
84	235	160, 220	**21500-037**
36	55	–	**21500-123**
36	175	160	**21500-124**
36	220	160, 220	**21500-122**

Note

- 4 stainless steel EMC gaskets are necessary per subrack, see page 6.86

Stainless steel gasket between cover plate and horizontal rail

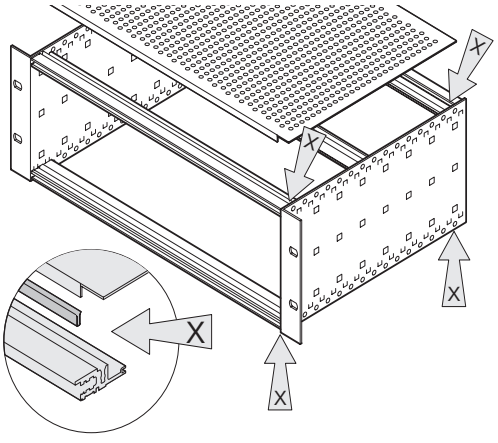

06102052

Assembly tools

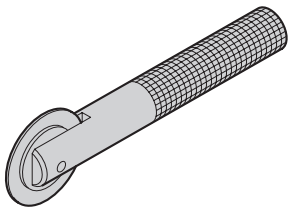

aza45938

- Stainless steel gasket is clipped into horizontal rail and forms the contact cover plate
- Fits all horizontal rails

Order Information

Width HP	Length mm	Qty/PU	Part no.
42	182.4	10	**24560-241**
63	284.0	10	**24560-243**
84	395.7	10	**24560-245**
84	395.7	100	**24560-246**
Assembly tool for stainless steel EMC gasket (horizontal rails), 1 piece			**24560-271**

Note

- When a rear hood is used, the EMC stainless steel gasket ensures the conductive connection between horizontal rail and rear hood

For further information www.schroff.biz/oneclick
oneClick search code = Part no.

Part number in bold face type: ready for despatch within 2 working days
Part number in normal type: ready for despatch within 10 working days

Coding pin for rear frame (NFF standard)

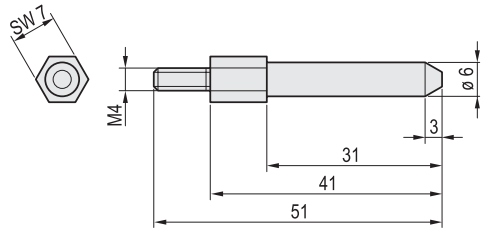

Order Information

Description	Qty/PU	Part no.
Coding pin, St, white zinc-plated	1	**60895-018**

For further information www.schroff.biz/oneclick
oneClick search code = Part no.

Rear hood for 3 U and 6 U subracks (for stainless steel EMC gasket)

Order Information

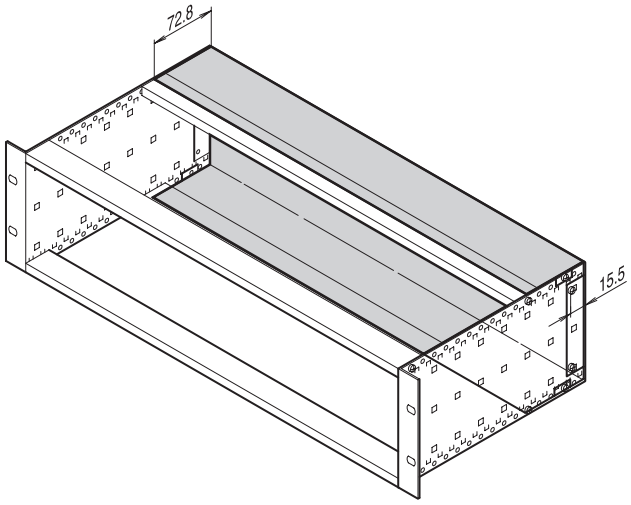

Height	Width	Rear hood	EMC stainless steel gasket, between cover plate and horizontal rail
U	HP	1 piece	PU 10 pieces
3	42	**34561-750**	**24560-241**
3	84	**34561-752**	**24560-245**
6	63	**34561-763**	**24560-243**
6	84	**34561-764**	**24560-245**
Torx pan head screw, M4 × 6, St, zinc-plated, PU 100 pieces		**24560-135**	–
Assembly tool, for stainless steel EMC gasket (horizontal rails), 1 piece 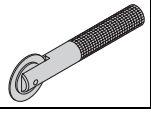			**24560-271**

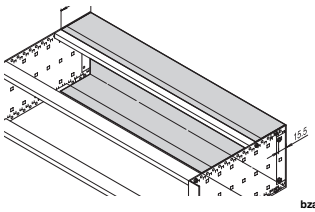

Al, 1 mm, clear passivated;
60 mm additional side panel depth required (board depth + 60 mm);
for shielding please order EMC gasket for horizontal rail separately;
cannot be used simultaneously with rear corner profile

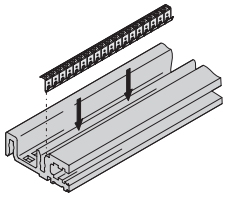

Stainless steel EMC gasket, clips into the horizontal rail and forms the contact with the cover plate; suitable for all horizontal rails

Note

■ Other dimensions of rear hood available on request

Subracks – for railway applications ServicePLUS

configuration

Components can be varied and combined freely

Simple. Fast. For the product you want.

- Configuration tables from page 6.17
- Online configuration: **www.schroff.co.uk/configuration**

assembly

Fitting of all mechanical, electrical and electronic components by our specialists

Assembled by professionals. Twice the benefit!

- Professional and reliable from 1 piece
- Ready for despatch within 5 working days
- Further information: **www.schroff.co.uk/assembly**

modification

Custom drillings, cut-outs and special colours for standard products

Small changes. Large impact.

- Custom modifications from 1 piece
- Ready for despatch within 10 working days
- Further information: **www.schroff.co.uk/modification**

solution

Integration and custom developments

Simple. Fast. From one source.

- Special sizes (depth and width)
- Individual thermal concepts
- Ready for despatch within 10 working days
- Further information: **www.schroff.co.uk/solution**

express

Delivery time to customer's request

When fast has to be faster.

- Express logistics
- Further information: **www.schroff.co.uk/express**

academy

Knowledge transfer and partnership

Knowledge. Sharing. Partnerships.

- Seminars, CAD drawings, test reports, user reports
- Further information: **www.schroff.de/academy**

Part number in bold face type: ready for despatch within 2 working days
Part number in normal type: ready for despatch within 10 working days

Subracks – for railway applications ServicePLUS

Application examples



06108006

Application: Subrack receptacle/mounting frame



06108020

Application: Electronic signal box



41108002

Application: Automatic train control system



41108001

Application: Mobile telephony system



Csee_DSCN2296

Application: Control system



01004031

Application: Signalling control systems

Overview 0
Cabinets 1
Wall mounted cases 2
Accessories for cabinets and wall mounted cases 3
Climate control 4
Desk-top cases 5
Subracks/ 19" chassis 6
Front panels, plug-in units 7
Systems 8
Power supply units 9
Backplanes 10
Connectors, front panel component system 11
Appendix 12

19" chassis – *multipacPRO*



06005001

Standards/certifications

- External dimensions in accordance with: IEC 60297-3-100, -101, -105
- Type of protection IP 20 in accordance with IEC 60529
- EMC test in accordance with VG 95373 part 15 or IEC 61587 T3



06008009

Handles can be bolted on from front

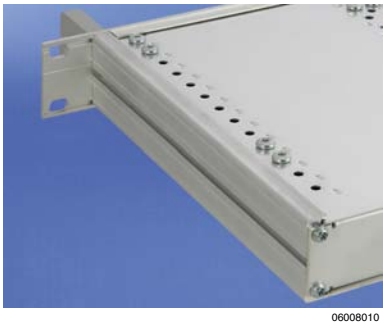

06008010

High stability through aluminium profile side panel

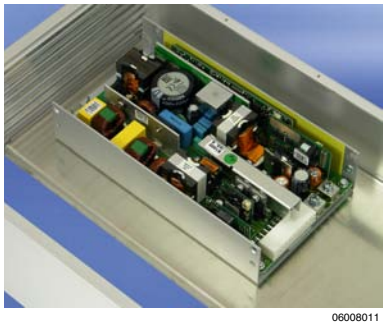

06008011

Mounting plate for installation of heavy components

Top cover and base plate in 3 versions



06008003

Plain



06008005

Perforated



06008004

For standardised board mounting

Downloads and further important information can be found on the Internet under www.schroff.biz

Overview 6.90

19" chassis

- Aluminium or steel (AlZn coated) designs
- For standardised 19" board mounting or for installation of non-standardised components
- The ideal solution for electronic devices in the most compact dimensions
- EMC shielding upgradable
- Mounting service and customized machining with ServicePLUS



06002003

19" complete chassis (steel)

- 1, 2 U
- Steel chassis (AlZn coated), Al front panel
- Plain top cover and base plate



06008004

19" complete chassis (aluminium)

NEW

- 1, 2, 3, 4, 5 U
- Entirely from aluminium
- Versions:
  - Plain top cover and base plate
  - Perforated top cover and base plate
  - Top cover and base plate for standadised boards

Configure 19" chassis with ServicePLUS (aluminium)

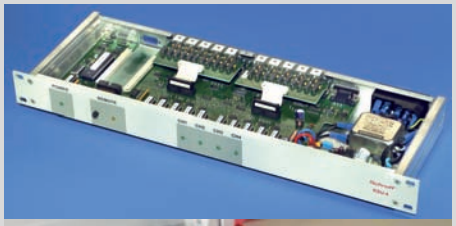



06006001 06002002

19" chassis for non-standardised assembly

- For the assembly of power supplies with mounting plates, boards...
- Heights 1, 2, 3, 4, 5 U

For standardised board mounting (IEC 60297-3-101)

- For the assembly of connectors (EN 60603) or insulated backplanes
- Heights 1, 2 U



30407004

ServicePLUS from page 6.96

e.g. individual configuration and assembly
e.g. modifications (cut-outs)
e.g. downloads (CAD drawings, user manuals, test reports)
e.g. custom solutions (special sizes)

www.schroff.biz/serviceplus/

multipacPRO
19" complete chassis (St) 6.92
19" complete chassis (Al 6.93

How to configure 19" chassis?
19" chassis for non-standardised assembly 6.98
(basic frame, mounting plate, cover plate, front handles, assembly of telescopic slides)
19" chassis for standardised assembly 6.100
(basic frame, base plate, cover plate, front handles, assembly of telescopic slides).

Accessories
Guide rails 6.102
EMC gasketing kit 6.103
Telescopic slides 1 U. 6.104
Telescopic slides 2 U. 6.105

ServicePLUS . . 6.96

Application examples 6.106

19" complete chassis from steel, plain top cover and base plate



06002003

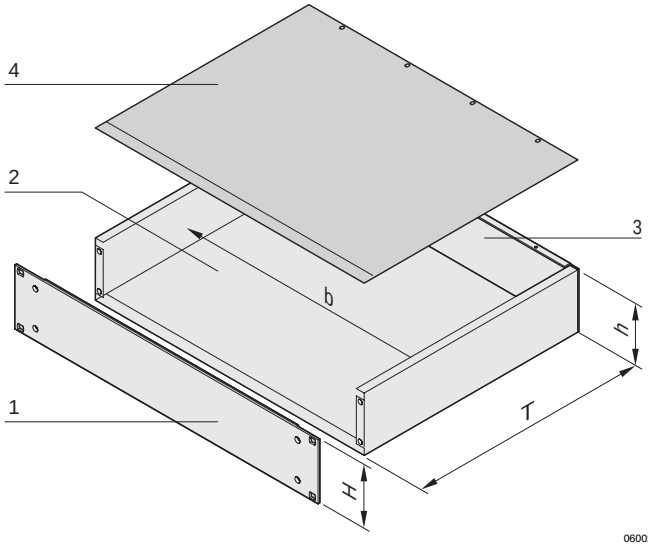

06002051

h = clear height (overall) (H - 3.0 mm)
b = clear installation width = 447 mm

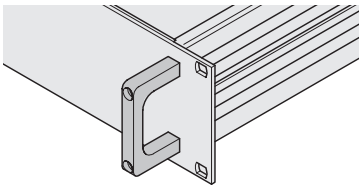

06002052

Front handle

ServicePLUS see page 6.96

- Complete chassis, St (AlZn coated) with Al extrusion front panel
- Detachable rear panel for easy machining
- In the 1 U version 19" and ATX power supplies can be assembled up to a clearance of 40 mm
- EMC shielding of approx. 30 dB(A) at 1 GHz (without additonal shielding material)
- In accordance with standard IEC 60297-3-101

Delivery comprises (kit)

Item	Qty	Description
1	1	Front panel, Al extrusion, 3 mm; at 1 U: front anodised, rear etched; from 2 U: front and rear side of front panels clear passivated
2	1	Base body plain, St, 1 mm, (AlZn coated)
3	1	Rear panel, St, 1 mm (AlZn coated)
4	1	Cover plain, St, 1 mm (AlZn coated)
5	1	Assembly kit

Order Information

Height U	Height H mm	Depth T mm	Part no.
1	43.7	220	**20860-120**
1	43.7	280	**20860-121**
1	43.7	340	**20860-122**
2	88.1	280	**20860-126**
2	88.1	340	**20860-127**
Front handles incl. assembly kit for 1 U, Al extrusion, anodised, PU 2 pieces			**20860-256**
Front handles incl. assembly kit for 2 U, Al extrusion, anodised, PU 2 pieces			**20860-257**

Note

- Further versions with steel front panel (pizza box) available on request
- Use of telescopic slides not possible
- No special EMC version available
- Standardised internal mounting kits cannot be used

For further information www.schroff.biz/oneclick
oneClick search code = Part no.

Part number in bold face type: ready for despatch within 2 working days
Part number in normal type: ready for despatch within 10 working days

19" complete chassis from aluminium, plain top cover and base plate



06008003

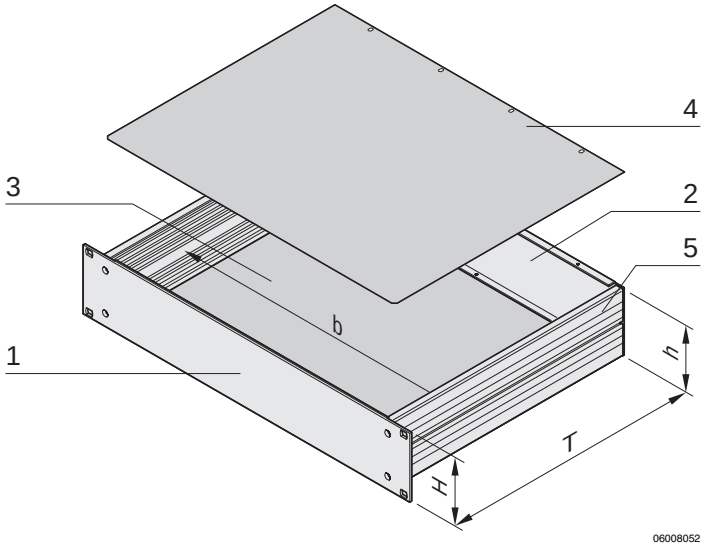

06008052

h = clear height (overall) (H - 8.1 mm)
b = clear installation width = 403 mm

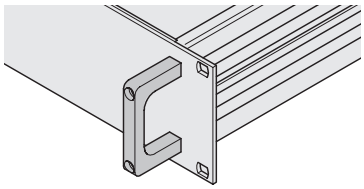

06002052

Front handle

ServicePLUS see page 6.96

- Complete chassis from aluminium
- Detachable rear panel for easy machining
- 19" and ATX power supplies can be assembled in the 1 U case height up to a clearance of 35 mm
- EMC shielding of approx. 30 dB(A) at 1 GHz (without additonal shielding material)
- In accordance with standard IEC 60297-3-100, -101, -105

NEW

Delivery comprises (Kit)

Item	Qty	Description
1	1	Front panel, Al extrusion, 3 mm; at 1 U: front anodised, rear etched; from 2 U: front and rear side of front panels clear passivated
2	1	Rear panel, Al, 1 mm, etched
3	1	Base plate, plain, Al, 1 mm
4	1	Cover plate, plain, Al, 1 mm
5	2	Side panel, Al extrusion, untreated; with groove for threaded insert (2 × 7); 5 U two-piece, 3+2 U; EMC sealing
6	1	Assembly kit

Order Information

Height U	Height H mm	Depth T mm	Part no. Kit
1	43.7	220	20860-601
1	43.7	280	20860-602
2	88.1	280	20860-605
2	88.1	340	20860-606
3	132.6	280	20860-607
3	132.6	340	20860-608
3	132.6	400	20860-609
4	177.0	340	20860-612
4	177.0	400	20860-613
4	177.0	460	20860-614
5	221.5	460	20860-615
EMC gasketing kit Silicone/nickel gasket 2100 mm for contacting side panel/cover plate; stainless steel gasket for front panel/cover plate			**20860-130**
Front handles incl. assembly kit for 1 U, Al extrusion, anodised, PU 2 piece			**20860-256**
Front handles incl. assembly kit for 2 U, Al extrusion, anodised, PU 2 piece			**20860-257**
Front handles incl. assembly kit for 3 U, Al extrusion, anodised, PU 2 pieces			**20860-258**
Front handles incl. assembly kit for 4 U, Al extrusion, anodised, PU 2 pieces			**20860-259**
Front handles incl. assembly kit for 5 U, Al extrusion, anodised, PU 2 pieces			**20860-260**

Note

- Threaded inserts to push into the side panel see page 6.99
- Telescopic slides to mount into cabinet see page 6.104

19" complete chassis from aluminium, plain top cover and base plate



06008005

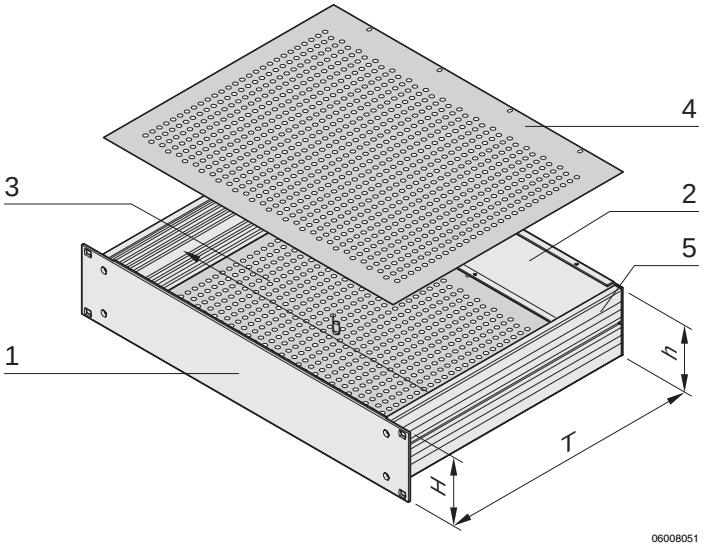

06008051

h = clear height (overall) (H - 8.1 mm)
b = clear installation width = 403 mm

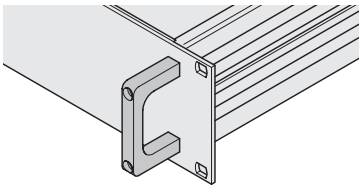

06002052

Front handle

ServicePLUS see page 6.96

- Complete chassis from aluminium
- Detachable rear panel for easy machining
- 19" and ATX power supplies can be assembled in the 1 U case height up to a clearance of 35 mm
- EMC shielding of approx. 30 dB(A) at 1 GHz (without additonal shielding material)
- In accordance with standard IEC 60297-3-100, -101, -105

NEW

Delivery comprises (Kit)

Item	Qty	Description
1	1	Front panel, Al extrusion, 3 mm; at 1 U: front anodised, rear etched; from 2 U: front and rear side of front panels clear passivated
2	1	Rear panel, Al, 1 mm, etched
3	1	Base plate, perforated, Al, 1 mm
4	1	Cover plate, perforated, Al, 1 mm
5	2	Side panel, Al extrusion, untreated; with groove for threaded insert (2 × 7); 5 U two-piece, 3+2 U; incl. EMC sealing
6	1	Assembly kit

Order Information

Height U	Height H mm	Depth T mm	Part no.
1	43.7	220	20860-621
1	43.7	280	20860-622
2	88.1	280	20860-625
2	88.1	340	20860-626
3	132.6	280	20860-627
3	132.6	340	20860-628
3	132.6	400	20860-629
4	177.0	340	20860-632
4	177.0	400	20860-633
4	177.0	460	20860-634
5	221.5	460	20860-635
EMC gasketing kit Silicone/nickel gasket 2100 mm for contacting side panel/cover plate; stainless steel gasket for front panel/cover plate			**20860-130**
Front handles incl. assembly kit for 1 U, Al extrusion, anodised, PU 2 piece			**20860-256**
Front handles incl. assembly kit for 2 U, Al extrusion, anodised, PU 2 piece			**20860-257**
Front handles incl. assembly kit for 3 U, Al extrusion, anodised, PU 2 pieces			**20860-258**
Front handles incl. assembly kit for 4 U, Al extrusion, anodised, PU 2 pieces			**20860-259**
Front handles incl. assembly kit for 5 U, Al extrusion, anodised, PU 2 pieces			**20860-260**

Note

- Threaded inserts to push into the side panel see page 6.99
- Telescopic slides to mount into cabinet see page 6.104

Part number in bold face type: ready for despatch within 2 working days
Part number in normal type: ready for despatch within 10 working days

19" complete chassis from aluminium, for assembly of euroboards



06008004

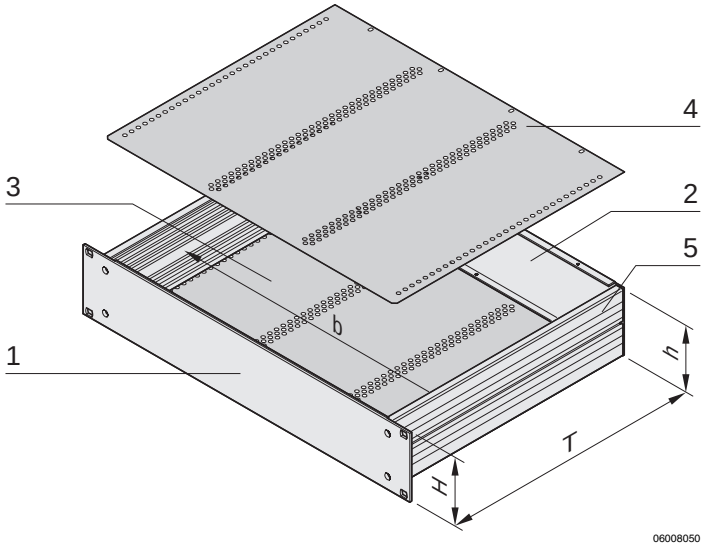

06008050

h = clear height (overall) (H - 8.1 mm)
b = clear installation width = 403 mm

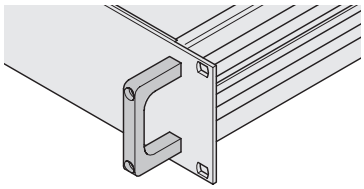

06002052

Front handle

ServicePLUS see page 6.96

- Complete chassis from aluminium
- Detachable rear panel for easy machining
- 19" and ATX power supplies can be assembled in the 1 U case height up to a clearance of 35 mm
- EMC shielding of approx. 30 dB(A) at 1 GHz (without additonal shielding material)
- In accordance with standard IEC 60297-3-100, -101, -105

NEW

Delivery comprises (Kit)

Item	Qty	Description
1	1	Front panel, Al extrusion, 3 mm; at 1 U: front anodised, rear etched; from 2 U: front and rear side of front panels clear passivated
2	1	Rear panel, Al, 1 mm, etched
3	1	Base plate, Al, 1 mm; with drill holes for horizontal assembly with euroboards
4	1	Cover plate, Al, 1 mm; with drill holes for den horizontal assembly with euroboards
5	2	Side panel, Al extrusion, untreated; with grooves for threaded inserts (2 × 7)
6	1	Assembly kit

Order Information

Height U	Height H mm	Depth T mm	Part no.
1	43.7	220	20860-641
1	43.7	280	20860-642
2	88.1	280	20860-645
EMC gasketing kit Silicone/nickel gasket 2100 mm for contacting side panel/cover plate; stainless steel gasket for front panel/cover plate			**20860-130**
Front handles incl. assembly kit for 1 U, Al extrusion, anodised, PU 2 piece			**20860-256**
Front handles incl. assembly kit for 2 U, Al extrusion, anodised, PU 2 piece			**20860-257**

Note

- Threaded inserts to push into the side panel see page 6.99
- Guide rails see page 6.102
- Telescopic slides to mount into cabinet see page 6.104

For further information www.schroff.biz/oneclick
oneClick search code = Part no.

19" chassis – *multipacPRO* ServicePLUS

configuration

Components can be varied and combined freely

Simple. Fast. To the ideal product.

- Configuration tables from page 6.97
- Online configuration: **www.schroff.co.uk/configuration**

assembly

Fitting of all mechanical, electrical and electronic components by our specialists

Assembled by professionals. Double benefit!

- Professionally and reliable from quantity 1
- Ready for despatch within 5 working days
- Further information: **www.schroff.co.uk/assembly**

modification

Custom drilling, cut-outs and special colours for off-the-shelf products

FRONT PANEL EXPRESS

Small changes. Large impact.

- Customised modifications from 1 piece
- Ready for despatch within 10 working days
- Further information: **www.schroff.co.uk/modification**

solution

Integration and custom developments

Simple. Fast. From one source.

- Special sizes (depth and width)
- Individual thermal concepts
- Ready for despatch within 10 working days
- Further information: **www.schroff.co.uk/solution**

express

Delivery time to customer's request

When fast has to be faster.

- Express logistics
- Further information: **www.schroff.co.uk/express**

academy

Knowledge transfer and partnership

Knowledge. Sharing. Partnerships.

- Seminars, CAD drawings, test reports, user reports
- Further information: **www.schroff.co.uk/academy**

Part number in bold face type: ready for despatch within 2 working days
Part number in normal type: ready for despatch within 10 working days

How to configure 19" chassis

- Select height and depth of the basic kit
- Select further components



06006001

For non-standardised assemblies (1, 2 U) in accordance with IEC 60297-3-105

- Mounting plate
- Top cover/base plate
- Front handles
- EMC gasketing kit
- Telescopic slide

Note

- Non-standardised assemblies from page 6.98

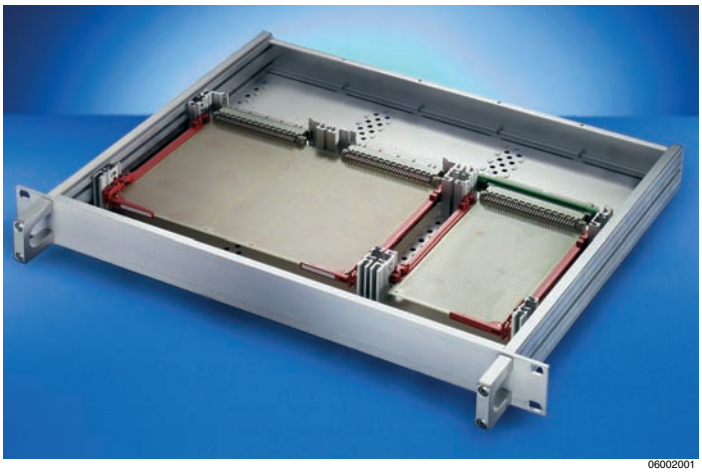

06002001

For non-standardised assemblies (1, 2 U) in accordance with IEC 60297-3-100, -101, -105

- Top cover/base plate for horizontal boards
- Interior mounting for connector or backplane assembly
- front handles
- EMC gasketing kit
- Telescopic slides

Note

- Standardised assemblies from page 6.100

Individual components 19" chassis for non-standardised assemblies

- Please select:
  - Height and depth of basic kit (1 ... 5 U)
  - Mounting plate
  - Top cover/base plate
  - Front handles
  - EMC gasketing kit
  - Telescopic slides
- In accordance with standard 60297-3-105

Order Information

				Basic kit	Mounting plate	Top cover/base plate	
						plain	perforated
				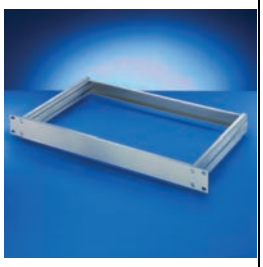	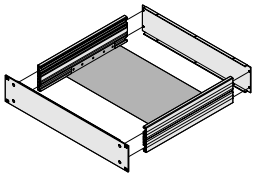	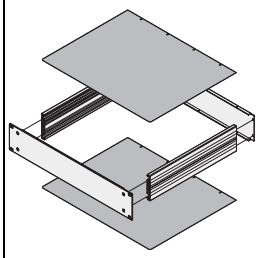	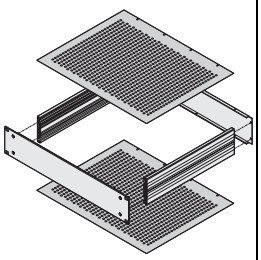
				06002004	06002058	06002053	06007050
				1 x Al front panel, 3 mm; 2 x Al profile side panel; 1 x Al rear panel incl. assembly kit	Al, 2 mm, depth = D - 70 mm; for heavy equipment	is pushed into basic kit, Al, 1 mm, clear passivated, please order EMC gasketing kit separately	Pushed into basic frame, Al, 1 mm, clear chromated, hole diameter 4 mm, degree of perforation 58 %
Height U	Height mm	Width HP	Depth D mm	PU 1 kit	1 piece	1 piece	1 piece
1	43.7	84	220	**20860-201**	**20860-107**	**30860-501**	**30860-510**
1	43.7	84	280	**20860-202**	**20860-108**	**30860-502**	**30860-511**
1	43.7	84	340	**20860-203**	**20860-109**	**30860-503**	**30860-512**
2	88.1	84	220	**20860-210**	**20860-107**	**30860-501**	**30860-510**
2	88.1	84	280	**20860-211**	**20860-108**	**30860-502**	**30860-511**
2	88.1	84	340	**20860-212**	**20860-109**	**30860-503**	**30860-512**
3	132.6	84	280	**20860-219**	**20860-108**	**30860-502**	**30860-511**
3	132.6	84	340	**20860-220**	**20860-109**	**30860-503**	**30860-512**
3	132.6	84	400	**20860-221**	**20860-110**	**30860-504**	**30860-513**
3	132.6	84	460	**20860-222**	**20860-111**	**30860-505**	**30860-514**
4	177.0	84	280	**20860-228**	**20860-108**	**30860-502**	**30860-511**
4	177.0	84	340	**20860-229**	**20860-109**	**30860-503**	**30860-512**
4	177.0	84	400	**20860-230**	**20860-110**	**30860-504**	**30860-513**
4	177.0	84	460	**20860-231**	**20860-111**	**30860-505**	**30860-514**
5	221.5	84	460	**20860-240**	**20860-111**	**30860-505**	**30860-514**

Part number in bold face type: ready for despatch within 2 working days
Part number in normal type: ready for despatch within 10 working days

Individual components 19" chassis for non-standardised assemblies

Order Information

Height U	Height mm	Width HP	Depth D mm	Front handles 06002052 Al extrusion, anodised, incl. assembly kit PU 2 pieces	Threaded insert M3 for extruded side panel 06007051 St, 2 mm, zinc-plated, height 7 mm, length 431.3 mm, M3 hole threaded 1 HP = 5.08 mm 1 piece	EMC gasketing kit esa44237 to increase EMC shielding see page 6.103 PU 1 kit	Assembly kit for telescopic slides 06094004 Assembly kit and adaptor bracket for the cabinets VARISTAR, eurorack, minirack; for assembly of 19" chassis on telescopic slides, please order telescopic slides separately see page 6.104 PU 1 kit
1	43.7	84	220	**20860-256**	**30821-589**	**20860-130**	**20860-131**
1	43.7	84	280				
1	43.7	84	340				
2	88.1	84	220	**20860-257**			
2	88.1	84	280				
2	88.1	84	340				
3	132.6	84	280	**20860-258**			
3	132.6	84	340				
3	132.6	84	400				
3	132.6	84	460				
4	177.0	84	280	**20860-259**			
4	177.0	84	340				
4	177.0	84	400				
4	177.0	84	460				
5	221.5	84	460	**20860-260**			

Note

- Further sizes available on request
- Al extrusion side panels up to 1000 mm length available on request
- Telescopic slides see page 6.104

Individual components 19" chassis for standardised 19" assemblies

- Please select:
  - Height and depth of basic kit (1, 2 U)
  - Top cover/base plate for horizontal boards
  - Interior mounting for connector or backplane assembly
  - Front handles
  - EMC gasketing kit
  - Telescopic slides
- In accordance with standard 60297-3-100, -101, -105

Order Information

				Basic kit	Mounting of euroboards		
					top cover/base plate	for connector EN 60603	for insulated backplane assembly
				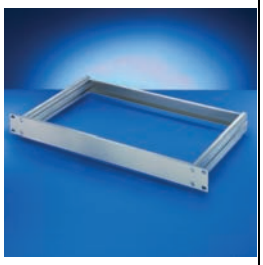	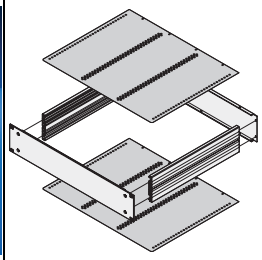	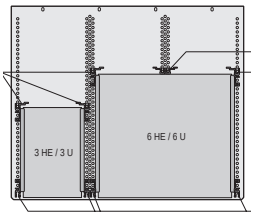	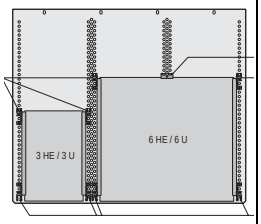
				06002004	06008053	06003050	06003051
				1 x Al front panel, 3 mm; 2 x Al profile side panel; 1 x Al rear panel, incl. assembly kit	Al, 1 mm; with drill hole for horizontal assembly with euroboards	2 x front horizontal rails; 2 x rear horizontal rails Z sufficient for one 3 U board as well as one 6 U board (for 1 U: 6 HP for 2 U: 15 HP)	2 x front horizontal rails; 2 x rear horizontal rails for insulated backplane assembly, threaded inserts and insulation strips sufficient for one 3 U board as well as one 6 U board (for 1 U: 6 HP for 2 U: 15 HP)
Height U	**Height mm**	**Width HP**	**Depth D mm**	**PU 1 kit**	**1 piece**	**PU 1 kit**	**PU 1 kit**
1	43.7	84	220	**20860-201**	**30860-519**	**20860-115**	**20860-116**
1	43.7	84	280	**20860-202**	**30860-520**	**20860-115**	**20860-116**
1	43.7	84	340	**20860-203**	**30860-521**	**20860-115**	**20860-116**
2	88.1	84	220	**20860-210**	**30860-519**	**20860-117**	**20860-118**
2	88.1	84	280	**20860-211**	**30860-520**	**20860-117**	**20860-118**
2	88.1	84	340	**20860-212**	**30860-521**	**20860-117**	**20860-118**

Part number in bold face type: ready for despatch within 2 working days
Part number in normal type: ready for despatch within 10 working days

19" chassis – *multipacPRO* ServicePLUS

Individual components 19" chassis for standardised 19" assemblies

Order Information

Height U	Height mm	Width HP	Depth D mm	Front handles	Threaded insert M3 for extruded side panel	EMC gasketing kit	Assembly kit for telescopic slides
				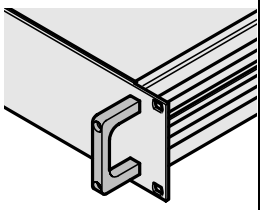 06002052	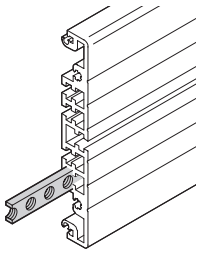 06007051	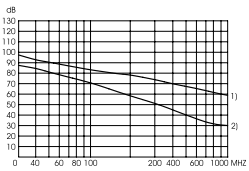 esa44237	 06094004
				Al extrusion, anodised, incl. assembly kit	St, 2 mm, zinc-plated, height 7 mm, length 431.3 mm, M3 hole clearance 1 HP = 5.08 mm	to increase EMC shielding see page 6.103	Assembly kit and adaptor bracket for the cabinets VARISTAR, eurorack, minirack; for assembly of 19" chassis on telescopic slides, please order telescopic slides separately see page 6.104
				PU 2 pieces	1 piece	PU 1 kit	PU 1 kit
1	43.7	84	220	**20860-256**	**30821-589**	**20860-130**	**20860-131**
1	43.7	84	280				
1	43.7	84	340				
2	88.1	84	220	**20860-257**			
2	88.1	84	280				
2	88.1	84	340				

Note

- Further sizes available on request
- Al extrusion side panels up to 1000 mm length available on request
- Telescopic slides see page 6.104

Guide rails for boards without front panels, one-piece, groove width 2 mm

Order Information

Assembly
- can be clipped into Al extruded horizontal rails
-can be clipped into1.5 mm thick plates

storage temperature
from -40 °C ... 130 °C

For PCBs without front panels
"Accessories"

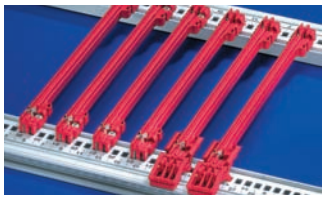

up to 220 mm length PBT, UL 94 V-0; from 280 mm length, multi-piece, end piece PBT, UL 94 V-0, middle section Al extrusion

Board lengths mm	Groove width mm	Colour mm	PU 10 pieces[2)]
160	2	red	**24560-373**
220	2	red	**24560-374**
280	2	red	**24560-375**
340	2	red	**24560-376**
Retention screw, PU 100 pieces 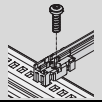			**24560-141**

2) Part no. includes one packing unit (PU); delivery is exclusively made in PU

Guide rail accessories

Order Information

Assembly mm	Colour mm	ESD clip for guide rails 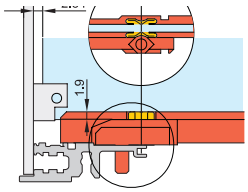 04503050 Spring steel, tin-plated, ensures conductive contact between circuit board and horizontal rail, on both the solder side and the component side. PU 50 pieces	Board retention for PCBs without front panel 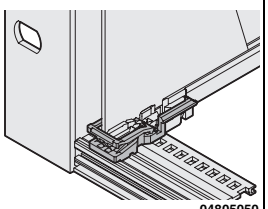 04805050 PBT, UL 94 V-0, red, to fix the PCB in the subrack (also slot 1), can also be used without board handle, minimum distance 3 HP PU 10 pieces	Board handle for board locking 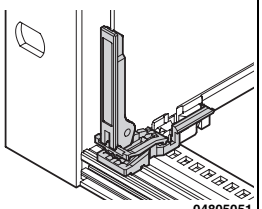 04805051 PBT, UL 94 V-0, red, insertion/ extraction function with connection to board locking (also slot 1), mounting directly behind front panel (upper and lower), minimum distance 3 HP PU 10 pieces	Identification strips for board handle 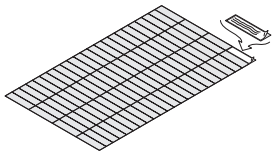 06108076 Polyester film, 31 x 4 mm, self-adhesive, white/matt (1 A4 sheet contains 438 pieces) PU 10 pieces
	red	–	**24560-377**	**24560-378**	–
above/below	silver	**24560-255**	–	–	**60817-228**
	white/matt	–	–	–	**60817-228**

Part number in bold face type: ready for despatch within 2 working days
Part number in normal type: ready for despatch within 10 working days

EMC gasketing kit

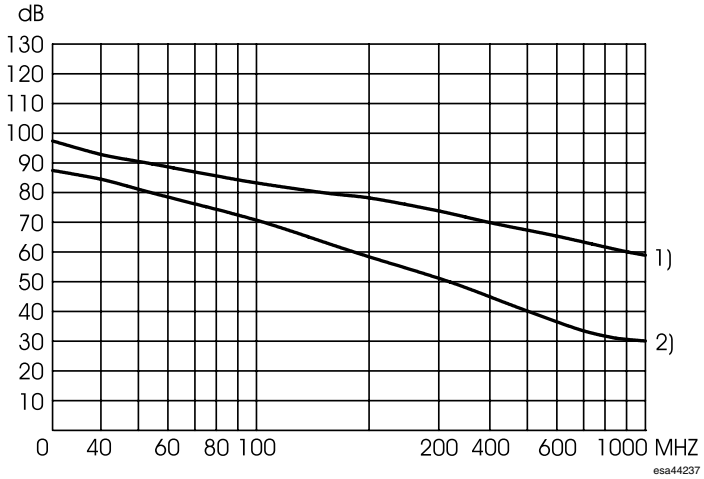

1) with EMC gasketing material
2) without EMC gasketing material

- The EMC gasket kit and the cover plates increase the shielding of the chassis from approx. 30 dB(A) to approx. 60 dB(A)

Delivery comprises (kit)

Item	Qty	Description
1	1	Gasket 2100 mm; silicone/nickel, contacting side panel/top cover and base plate
2	2	Saw tooth gasket 400 mm; stainless steel; contacting front panel/top cover and base plate

Order Information

Description	Part no.
EMC gasketing kit	**20860-130**

Note

- EMC test report: please enter part number under **www.schroff.biz/oneclick/**

For further information www.schroff.biz/oneclick
oneClick search code = Part no.

19" chassis – *multipacPRO* ServicePLUS

Universal 1 U telescopic slide



0050501100505055

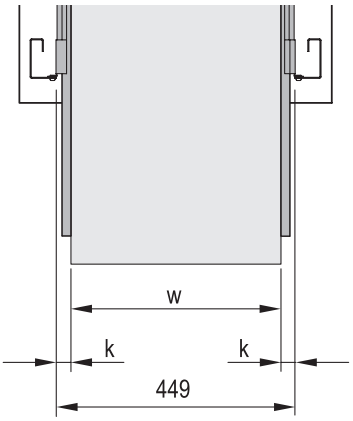

00505060

k = rail width, w = max. installation width

Dimensions table

Length L	Internal part								External part		
	A	B	C	D	E	F	G	X	O	P	Q
356	29.5	92.1	184.2	276.2	-	-	-	349.3	304.6	317.3	330.0
406	29.5	92.1	184.2	276.2	-	-	-	349.3	355.4	368.1	380.8
457	29.5	92.1	184.2	276.2	-	-	-	349.3	406.4	419.1	431.8
508	89.9	92.1	184.2	276.2	368.3	-	-	501.7	457.4	470.1	482.8
559	89.9	92.1	184.2	276.2	368.3	-	-	501.7	508.1	520.8	533.5
610	89.9	92.1	184.2	276.2	368.3	-	-	501.7	558.6	571.3	584.0
660	7.4	92.1	184.2	276.2	368.3	460.4	552.4	603.3	609.4	622.1	634.8
711	7.4	92.1	184.2	276.2	368.3	460.4	552.4	603.3	660.2	672.9	685.6

- Load-carrying capacity 23 - 39 kg per pair
- Lateral assembly on the 19" uprights (19" plane remains free for assembly of shelf/extraction drawer)
- Hinged
- Extension length > 100 %
- Rail width k = 9.7 mm,
  max. installation width of shelf/extraction drawer w = 429 mm

Delivery comprises

Item	Qty	Description
1	2	Telescopic slide, St, zinc-plated

Order Information

Length L mm	Extension length Y mm	Load-carrying capacity P kg	Part no.
356	381	39	**20110-090**
406	432	36	**20110-091**
457	483	34	**20110-092**
508	533	32	**20110-093**
559	584	29	**20110-094**
610	635	27	**20110-095**
660	686	23	**20110-096**
711	737	23	**20110-097**

Note

- For mounting into Schroff cabinets please order assembly kit separately, see page 6.101

For further information www.schroff.biz/oneclick
oneClick search code = Part no.

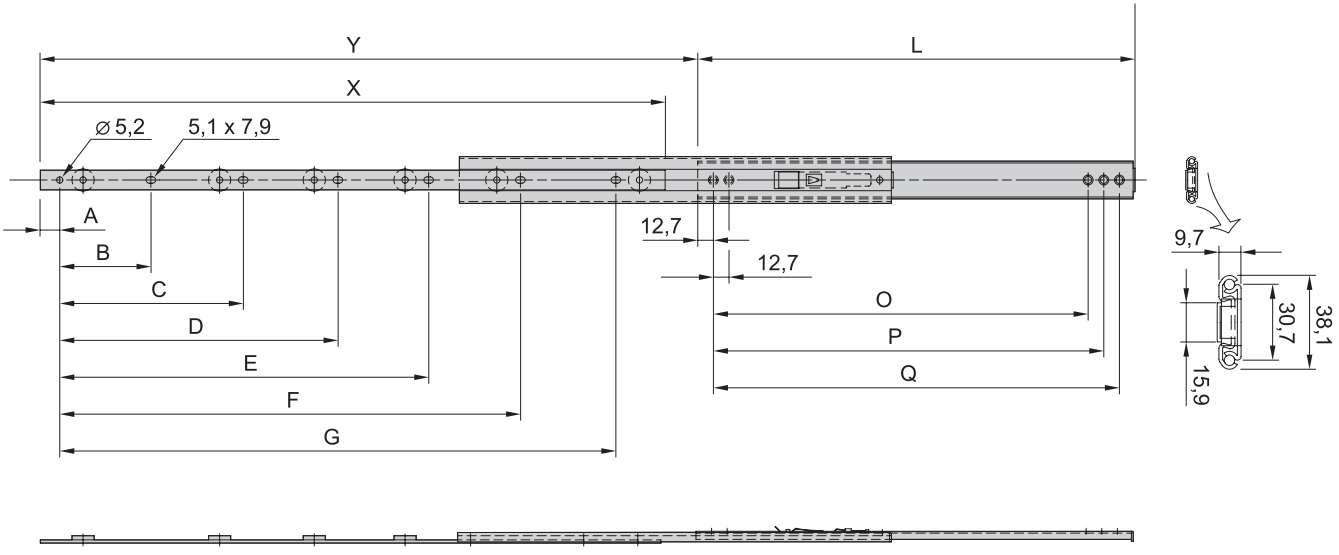

Part number in bold face type: ready for despatch within 2 working days
Part number in normal type: ready for despatch within 10 working days

Universal 2 U telescopic slide

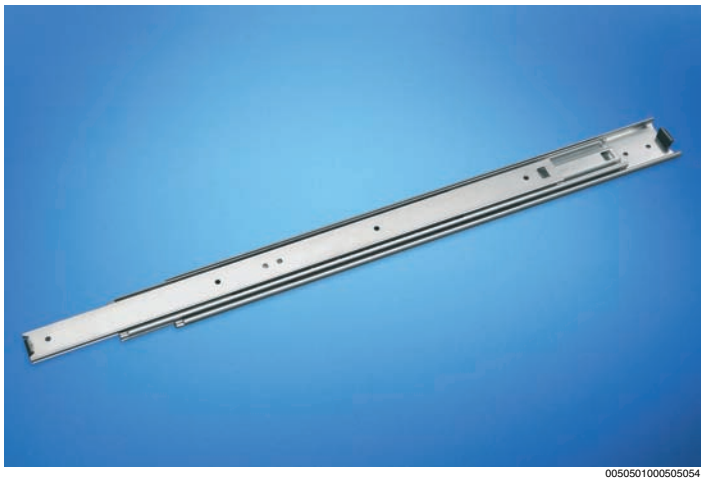

0050501000505054

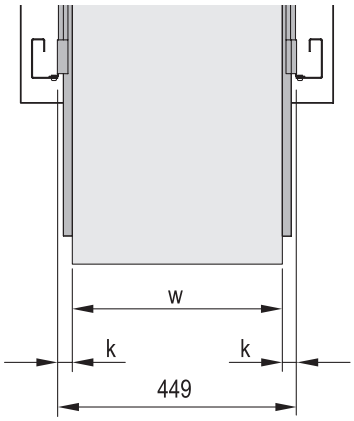

00505060

k = rail width, w = max. installation width

Dimensions table

Length L	Internal part				External part			
	A	B	C	X	D	E	F	G
305	76.2	177.8	254.0	305.0	76.2	190.5	241.3	266.7
356	101.6	203.2	304.8	356.0	88.9	215.9	292.1	317.5
406	127.0	228.6	355.6	406.0	127.0	241.3	342.9	368.3
457	127.0	279.4	406.4	457.0	127.0	292.1	393.7	419.1
508	152.4	304.8	457.2	508.0	152.4	317.5	444.5	469.9
559	177.8	330.2	508.0	559.0	177.8	342.9	495.3	520.7
610	177.8	381.0	558.8	610.0	177.8	393.7	546.1	571.5
660	203.2	406.4	609.6	660.0	203.2	419.1	596.9	622.3
711	228.6	431.8	660.4	711.0	228.6	444.5	647.7	673.1

- Load-carrying capacity 46 - 61 kg per pair
- Lateral assembly on the 19" uprights (19" plane remains free for assembly of shelf/extraction drawer)
- Locks at full extension
- Extension length > 100 %
- Rail width k = 16 mm,
  max. installation width of shelf/extraction drawer w = 417 mm

Delivery comprises

Item	Qty	Description
1	2	Telescopic slide, St, zinc-plated

Order Information

Length L	Extension length Y	Load-carrying capacity P	Part no.
mm	mm	kg	
305	330	61	**20110-100**
356	381	60	**20110-101**
406	432	58	**20110-102**
457	483	57	**20110-103**
508	533	55	**20110-104**
559	584	52	**20110-105**
610	635	50	**20110-106**
660	686	48	**20110-107**
711	737	46	**20110-108**

Note

- For mounting into Schroff cabinets please order assembly kit separately, see page 6.101

For further information www.schroff.biz/oneclick
oneClick search code = Part no.

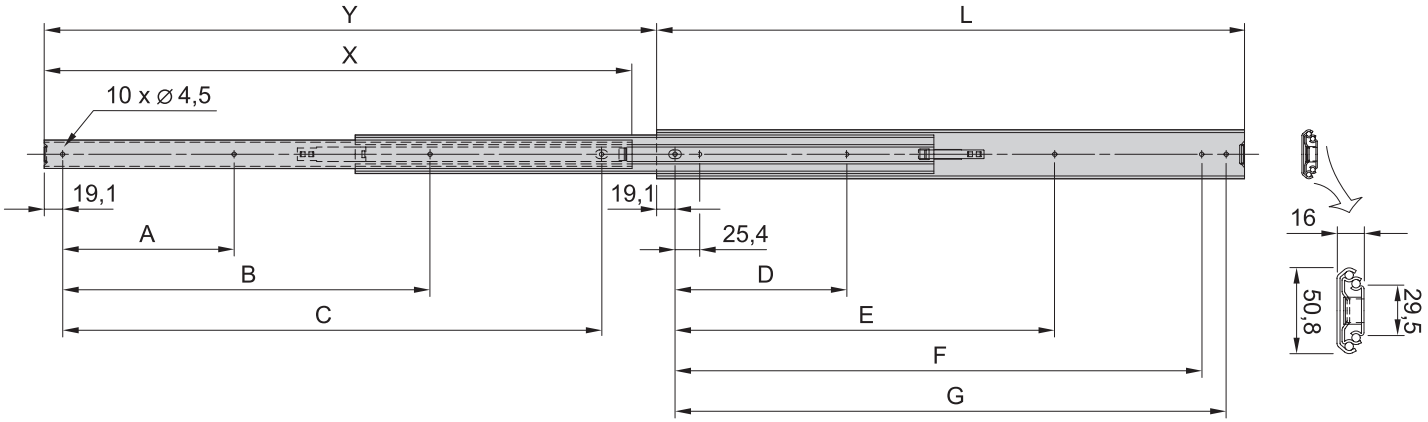

Application examples

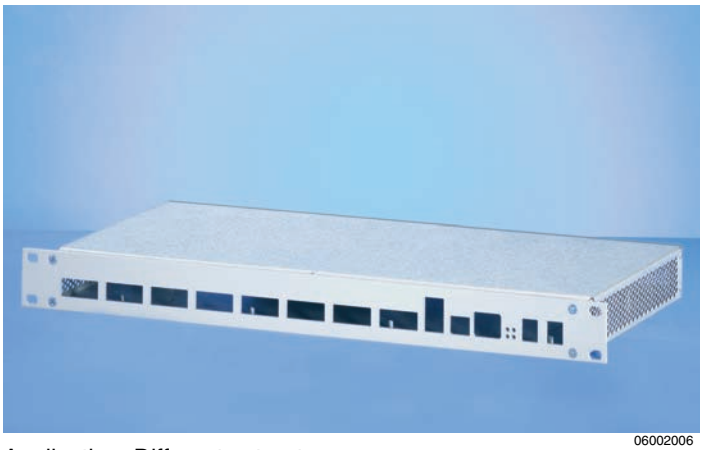

06002006

Application: Different cut-outs

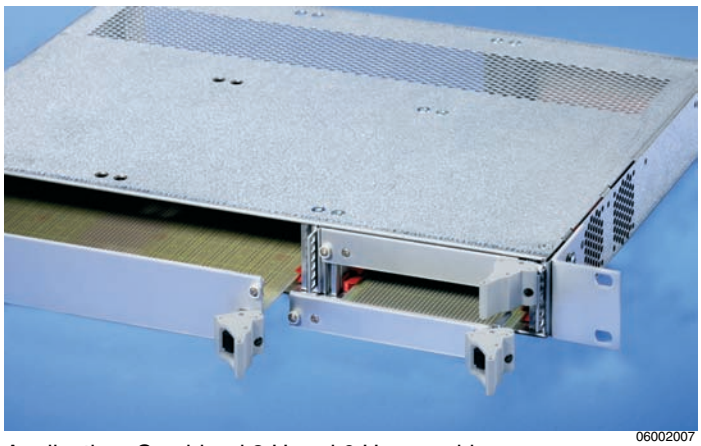

06002007

Application: Combined 3 U and 6 U assembly



06002005

Application: 2 U version with 2 x 3 U assembly



06108006

Application: 1 U multipacPRO (pizza box) complete in steel plate; 19" brackets can be removed if required



06108007

Application: 1 U multipacPRO complete in steel plate; Front panel in aluminium with cut-outs



06101008

Application: 1 U multipacPRO complete in steel plate; printed 19" front panel in aluminium with cut-outs

Part number in bold face type: ready for despatch within 2 working days
Part number in normal type: ready for despatch within 10 working days

Overview 0
Cabinets 1
Wall mounted cases 2
Accessories for cabinets and wall mounted cases 3
Climate control 4
Desk-top cases 5
Subracks/ 19" chassis 6
Front panels, plug-in units 7
Systems 8
Power supply units 9
Backplanes 10
Connectors, front panel component system 11
Appendix 12

19" chassis – *inpac*



02192001



02192005

Robust 19" chassis, also for board assembly

Standards

- External dimensions in accordance with IEC 60297-3-101
- Protection class IP 20 as per IEC 60529
- Protective GND/earth connections according to:
  DIN EN 50178 / VDE 0160
  DIN EN 60950 / VDE 0805
  DIN EN 61010-1 / VDE 0411 part 1
  DIN EN 61010-1A2 / VDE 0411 part 1/A1

Downloads and further important information can be found on the Internet under www.schroff.biz

Overview . . . . 6.108.

19" chassis with high mechanical stability

- Also usable as desk-top case
- Robust cases from aluminium die-cast frames to front and rear
- Flexible assembly for standardised board formats or individually, e.g. for mounting plates
- Cost benefit with mounting service and custom processing in ServicePLUS

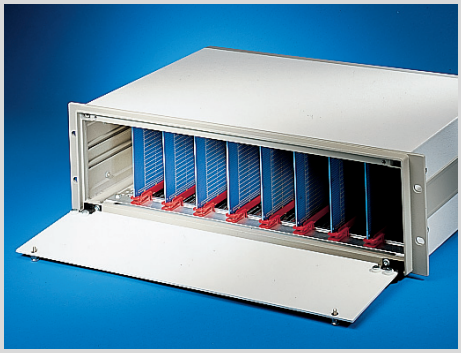

02192002

19" chassis/desk-top enclosure

- 2 U, 3 U, 4 U and 6 U heights



02192003

inpac built into 19" cabinet



30407004

ServicePLUS from page 6.96

e.g. individual configuration and assembly from 1 piece
e.g. printing
e.g. cut-outs in front or rear panels or cover plates
e.g. modifications (special colours)
e.g. customised solutions (special depths, electromagnetically shielded applications)

www.schroff.biz/serviceplus/

inpac
19" chassis 6.110

Accessories
Full-width front panels 6.111
Full-width rear panels 6.111
Support rails 6.112
Horizontal rails . . 6.112
Guide rails 6.113
Front handles . . . 6.114
GND/earthing kit . 6.114
Dimensions 6.116

ServicePLUS . 6.96

19" chassis



02192006

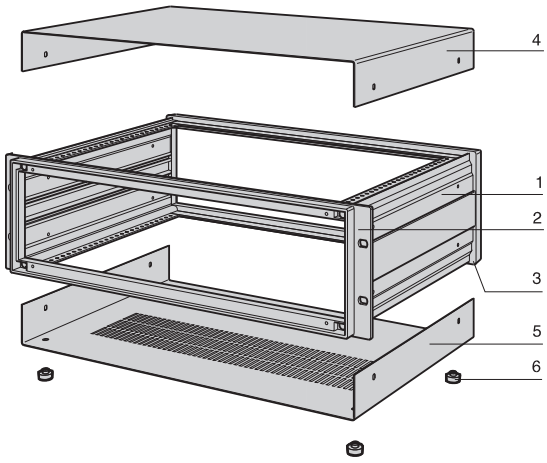

ipa30632

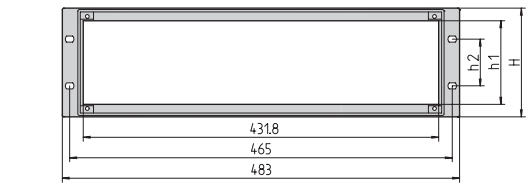

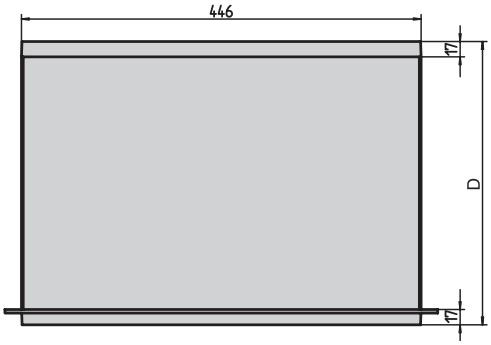



IPA30635

- For assembly with 19" components or individually with mounting plate
- Three rows ventilation slots in base for air inlet

Delivery comprises (Kit, Pos. 1, 2 and 3 assembled)

Item	Qty	Description
1	2	Side panel, Al extrusion, RAL 7030 at 6 U: 2 Al corner profiles 1 divider plate (steel plate)
2	1	Front frame, Al die-cast, RAL 7030, rear side with counterbores for drill holes to mount handles and front panels
3	1	Rear frame, Al die-cast, RAL 7030
4	1	Cover plate, St, 1 mm, RAL 7035, plastic-coated, with GND/earthing connection
5	1	Base plate, St, 1 mm, RAL 7035, plastic-coated, with GND/earthing connection
6	4	Case foot with anti-slip protection, PC, UL 94 V-0
7	1	Assembly kit

Order Information

Height H	Height H	h	h1	h2	Depth D	Part no.
U	mm	mm	mm	mm	mm	
2	88.0	86.0	57.5	76.2	254.5	**10828-071**
2	88.0	86.0	57.5	76.2	314.5	**10828-072**
2	88.0	86.0	57.5	76.2	374.5	**10828-073**
3	132.5	130.5	102.0	57.2	254.5	**10828-051**
3	132.5	130.5	102.0	57.2	314.5	**10828-052**
3	132.5	130.5	102.0	57.2	374.5	**10828-053**
3	132.5	130.5	102.0	57.2	434.5	**10828-054**
4	177.0	174.5	146.5	101.6	254.5	**10828-056**
4	177.0	174.5	146.5	101.6	314.5	**10828-057**
4	177.0	174.5	146.5	101.6	374.5	**10828-058**
4	177.0	174.5	146.5	101.6	434.5	**10828-059**
6	265.9	263.5	235.4	190.5	374.5	**10828-068**
6	265.9	263.5	235.4	190.5	434.5	**10828-069**

Note

- Extent of delivery includes screws for fixing rear panel and front panel

For further information www.schroff.biz/oneclick
oneClick search code = Part no.

ServicePLUS see page 6.96

Part number in bold face type: ready for despatch within 2 working days
Part number in normal type: ready for despatch within 10 working days

Front panels

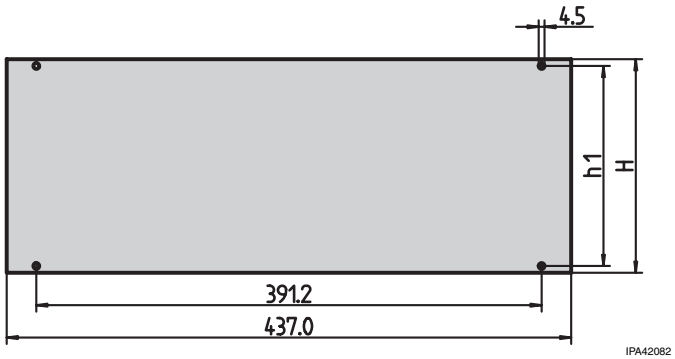

Delivery comprises

Item	Qty	Description
1	1	Front panel, Al, 2.5 mm, anodised, cut edges untreated

Order Information

Height U	Height H mm	h1 mm	Part no.
2	76.0	65.6	**30828-055**
3	120.5	110.0	**30828-058**
4	165.0	154.5	**30828-061**
6	253.8	243.4	**30828-067**

Note

■ Delivery of the 19" chassis comprises assembly kit for the front panel

Front panels, bottom-hinged

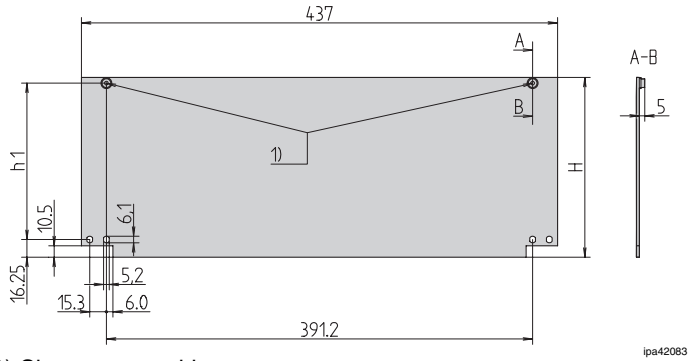

1) Sleeve pressed-in

Delivery comprises

Item	Qty	Description
1	1	Full-width front panel, hinged, Al, 2.5 mm, anodised, cut edges plain; steel sleeve pressed-in

Order Information

Height U	Height H mm	h1 mm	Part no.
2	76.0	54.5	**30828-085**
3	120.5	99.0	**30828-088**
4	165.0	143.5	**30828-091**
6	253.8	232.3	**30828-097**
Hinge for front panel PPE, UL 94 V-0, 1 kit			**20828-028**

Note

■ Please order hinge for front panel separately

Rear panels

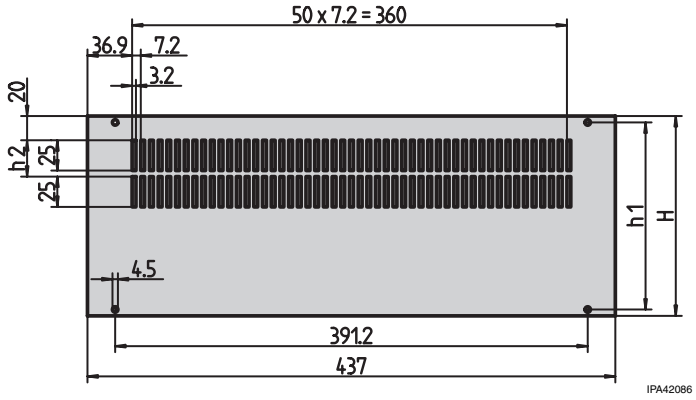

Delivery comprises (kit)

Item	Qty	Description
1	1	Rear panel, including assembly kit, Al 2.5 mm, anodised, cut edges untreated

Order Information

Height U	Height H mm	h1 mm	h2 mm	Part no.
2	76.0	65.6	–	**30828-070**
3	120.5	110.0	–	**30828-073**
4	165.0	154.5	–	**30828-076**
6	253.8	243.4	30	**30828-082**

Note

■ Delivery of the 19" chassis comprises assembly kit for the front panel

Support rails

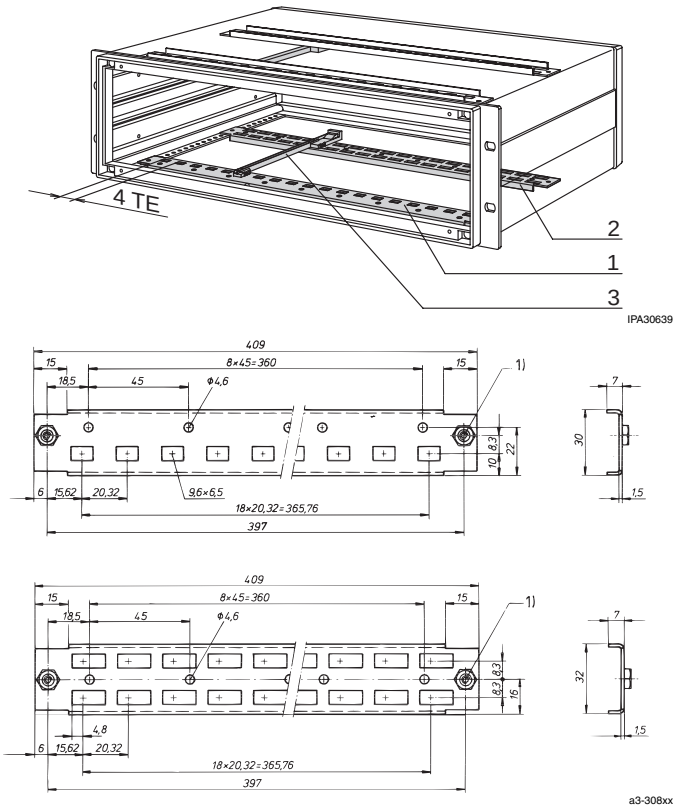

1) Press-in insert M4

- Guide rails for PCBs 100 × 160 mm or 100 × 220 mm can be fitted

Order Information

Item	Description	Part no.
1	Front support rail, St, 1.5 mm, blue-passivated, 1 piece	**30828-165**
2	Rear support rail, St, 1.5 mm, blue-passivated, 1 piece	**30828-174**
3	Guide rail 160 mm, PBT, UL 94 V-0, with integrated fixture for connector to EN 60603 (DIN 41612), PU 1 pair	**60817-078**
3	Guide rail 220 mm, PBT, UL 94 V-0, with integrated fixture for connector to EN 60603 (DIN 41612), PU 1 pair	**60817-079**
Screw For horizontal rail assembly, M4 × 8, flat head Pozidrive, PU 100 pieces		**21100-677**

■ More guide rails see page 6.113

For further information www.schroff.biz/oneclick
oneClick search code = Part no.

Horizontal rails

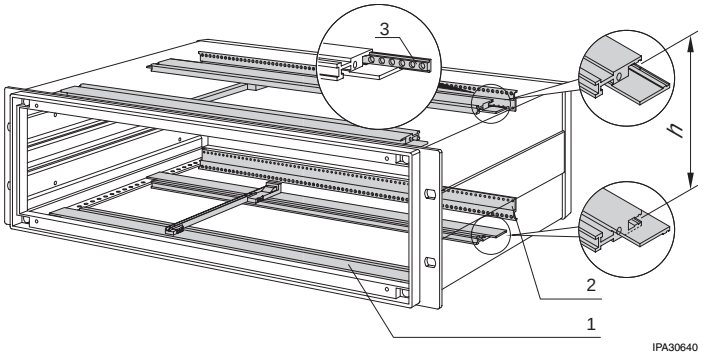

- For assembly with PCB
- Usable width 75 HP

Delivery comprises (components)

Item	Qty	Description
1	1	Horizontal rail, Al extrusion, anodised
2	1	Z-rail, Al extrusion, anodised
3	1	Threaded insert, St, zinc-plated (blue)

Order Information

Item	Description	Qty/PU	Part no.
1	Horizontal rail 75 HP	1	**30828-128**
2	Z-rail 75 HP, for DIN 41 612	1	**30814-513**
3	Threaded insert 75 HP	1	**30819-604**
Screw For horizontal rail assembly, M4 × 8, flat head Pozidrive, PU 100 pieces			**21100-677**
Cheesehead screw with slot M2.5 × 6, DIN 84, PU 100 pieces			**21100-146**
Guide rail 160 mm PBT, UL 94 V-0, with integrated fixture for connector to EN 60603 (DIN 41612), PU 1 pair			**60817-078**
Guide rail 220 mm PBT, UL 94 V-0, with integrated fixture for connector to EN 60603 (DIN 41612), PU 1 pair			**60817-079**

h	Bolt-on dimensions of backplane
U	mm
2	75.40
3	119.80
4	164.30
6	252.90

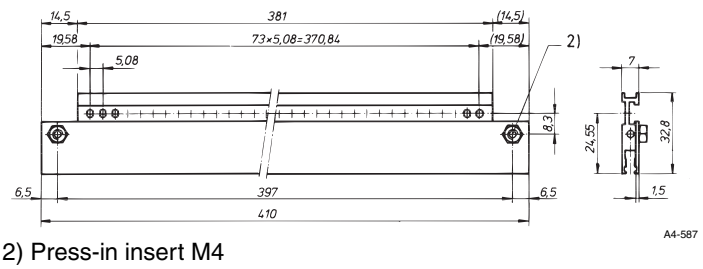

2) Press-in insert M4

Note

- Threaded insert may not be used to front

Part number in bold face type: ready for despatch within 2 working days
Part number in normal type: ready for despatch within 10 working days

Guide rails

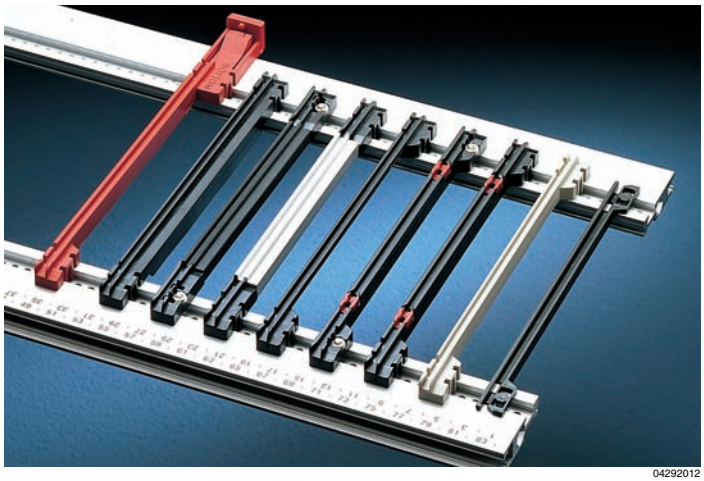

04292012

Order Information

		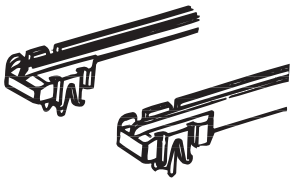 A42744		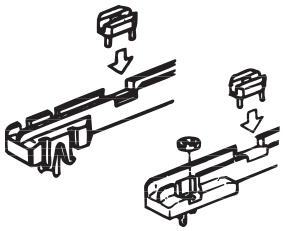 A42744		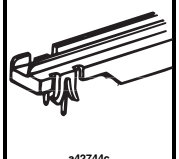 a42744c A42744	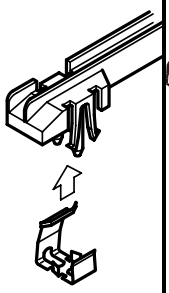 A42744	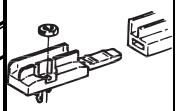 A42744
		Light version, snap-in	Standard version, snap-in	Version with board securing, snap-in	Version with board securing, bolt-on	Version for heavy load carrying capacity, snap-in	Version with ESD clip	Universal version with Al middle section, bolt-on
Board lengths mm	**Groove width** mm	**Part no.**	**Part no.**	**Part no.**	**Part no.**	**Part no.**	**Part no.**	**Part no.**
mm	mm	1 piece (SPQ 50)[1)]	1 piece (SPQ 50)[1)]	1 piece (SPQ 50)[1)]	1 piece (SPQ 50)[1)]	1 piece (SPQ 50)[1)]	Qty/PU 1 piece	Qty/PU 1 piece
100	2	–	**60817-015**	–	–	–	–	–
160	2	**60817-064**	**60817-103**	**60817-001**	**60817-053**	**60817-102**	**20817-368**	–
160	2.5	–	**60817-076**	–	–	–	–	–
180	2	–	–	**60817-026**	–	–	–	–
220	2	–	**60817-149**	**60817-016**	**60817-083**	**60817-085**	**20817-369**	–
220	2.5	–	–	–	–	**60817-098**	–	–
280	2	–	–	–	–	**60817-080**	–	–
340	2	–	–	–	–	–	–	**20825-120**
400	2	–	–	–	–	–	–	**20825-121**

1) SPQ (Standard Pack Quantity): Order number includes 1 piece, but delivery is exclusively made in standard pack quantity (SPQ); please order at least the SPQ quantity or a multiple thereof

Note

- For a detailed description of the guide rails see our website; if using oneClick, enter part number

For further information www.schroff.biz/oneclick
oneClick search code = Part no.

Front handles

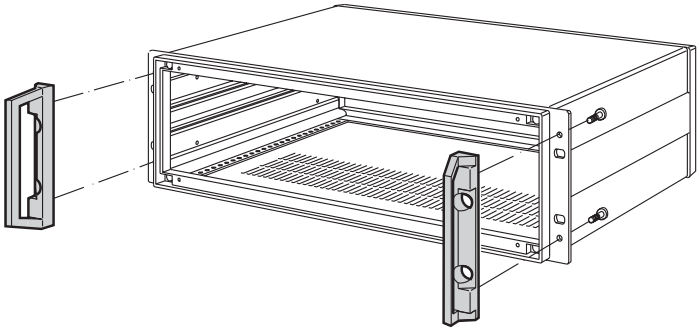

IPA30636

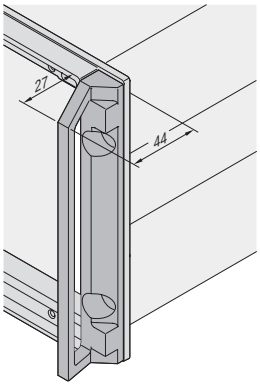

02108050

- Load-carrying capacity 35 kg per pair

Delivery comprises (kit)

Item	Qty	Description
1	2	Front handle, Al die-cast, powder-coated, RAL 7030 , incl. assembly kit

Order Information

Height U	Part no.
3	**20828-127**
4	**20828-128**
6	**20828-129**

For further information www.schroff.biz/oneclick
oneClick search code = Part no.

Earthing kit

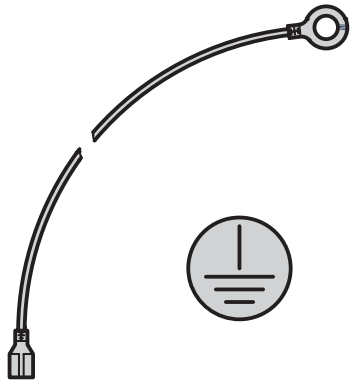

aza43284

- The earthing kit ensures VDE compliant earthing of the cases in accordance with
  - DIN EN 50178/VDE 0160
  - DIN EN 60950/VDE 0805
  - DIN EN 61010-1/VDE 0411 part 1
  - DIN EN 61010-1A2/VDE 0411 part 1/A
- VDE inspection carried out

Order Information

Description	Qty/PU	Part no.
GND/earthing kit, Cu wire, 1.5 mm^2, PVC sheathing, green/yellow, connects side panels, top and base plate and rear panel	1	**21100-814**

For further information www.schroff.biz/oneclick
oneClick search code = Part no.

PCB handle A

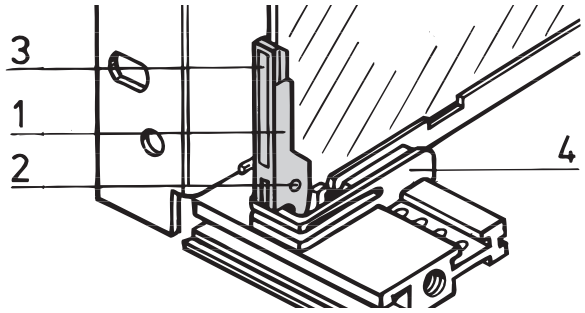

B4-2728

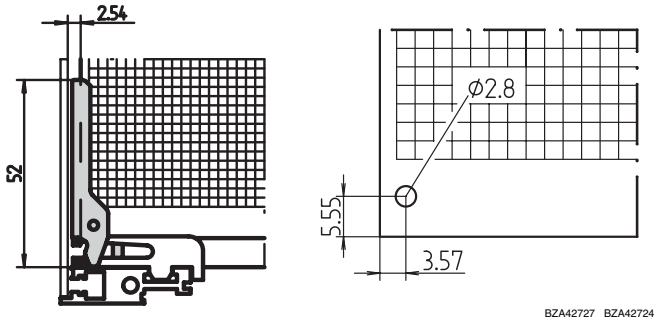

BZA42727 BZA42724

- To be mounted behind front panel, for PCB thickness 1.6 mm
- Insertion and extraction function
- Can be labelled

Order Information

Item	Description	Material	Colour	Qty/PU	Part no.
1	PCB handle A	PBT, UL 94 V-0	red	1 piece (SPQ 10)	**60817-096**
2	Pivot pin	Stainless steel	–	100	**21100-671**
3	Identification strip	Polyester film, self-adhesive	matt-silver	100	**21100-672**

SPQ (Standard Pack Quantity): Order number includes 1 piece, but delivery is exclusively made in Standard Pack Quantity: Therefore please order at least 10 pieces PCB handles or a multiple thereof

PCB retainer A

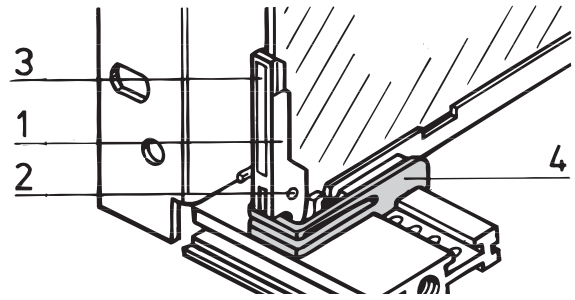

C4-2728

- Can be used on upper and lower horizontal rail, groove width 2 mm
- Minimum distance of guide rail 3 HP
- Can also be used without PCB handle

Order Information

Item	Description	Material	Colour	Qty	Part no.
4	PCB retainer A for top and bottom	PPE, UL 94 V-0	red	1 piece (SPQ 10)	**60817-097**

1) Order number includes 1 piece, but delivery is exclusively made in Standard Pack Quantity: Therefore please order at least 10 pieces PCB retainers or a multiple thereof

PCB retainer B

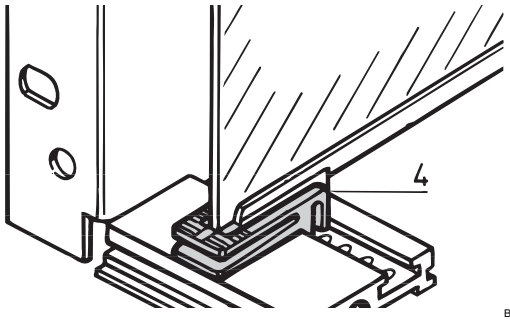

BZA46428

- Can be used on upper and lower horizontal rail, for PCB thickness 1.6 mm
- Can also be used without PCB handle
- Can also be used with guide blocks

Order Information

Item	Description	Material	Colour	Qty	Part no.
4	PCB retainer, bottom	PPE, UL 94 V-0	red	1 piece (SPQ 10)	**60817-054**
4a	PCB retainer, top	PPE, UL 94 V-0	black	1 piece (SPQ 10)	**60817-071**

SPQ (standard pack quantity): Order number includes 1 piece, but delivery is exclusively made in standard pack quantity: Therefore please order at least 10 pieces PCB retainers or a multiple thereof

Dimensions

19" front frame

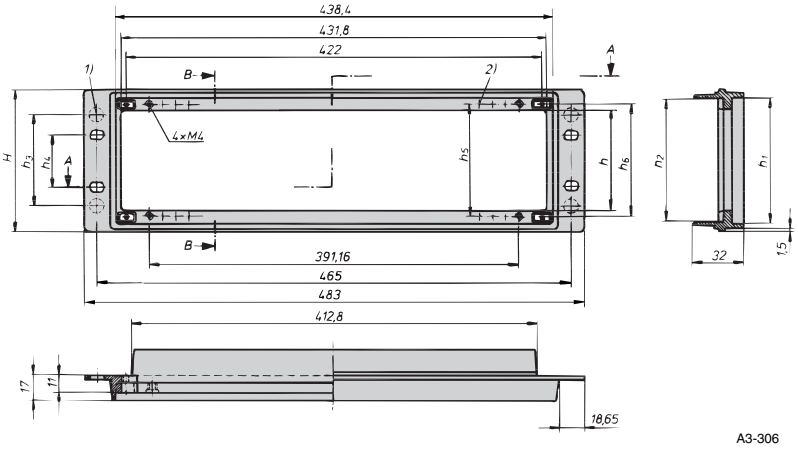

Section A-A

There are counterbores on the rear side of the front frame which can be drilled if required:
1) For handle assembly
2) For front panel assembly (grid 5.08 mm)

19" rear frame

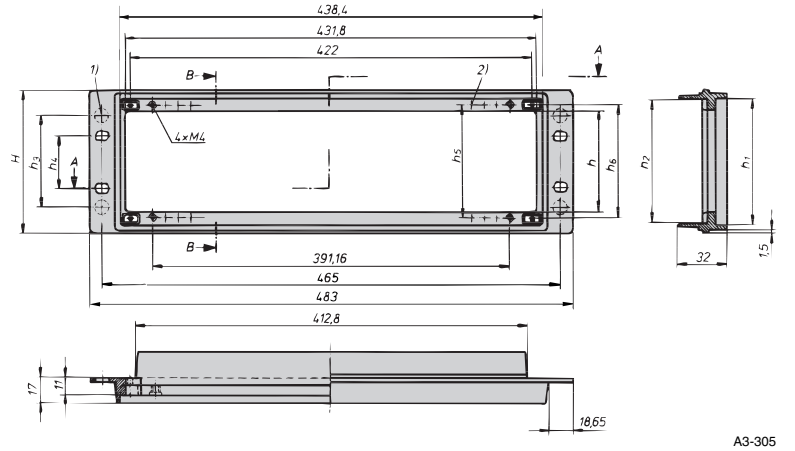

Section A-A

Dimensions table

Height in U	H	H_R	h	h_1	h_2	h_3	h_4	h_5	h_6	h_7
2	88.0	86.0	57.5	77.3	69.8	25.0	76.2	65.5	68.0	68.4
3	132.5	130.5	102.5	121.8	114.3	90.0	57.1	110.0	112.5	112.8
4	177.0	175.0	146.5	166.3	158.8	134.5	101.6	154.5	157.0	157.3
6	265.9	263.9	235.4	255.2	247.7	233.4	190.4	243.4	245.9	245.9

Part number in bold face type: ready for despatch within 2 working days
Part number in normal type: ready for despatch within 10 working days

Dimensions

Side panel

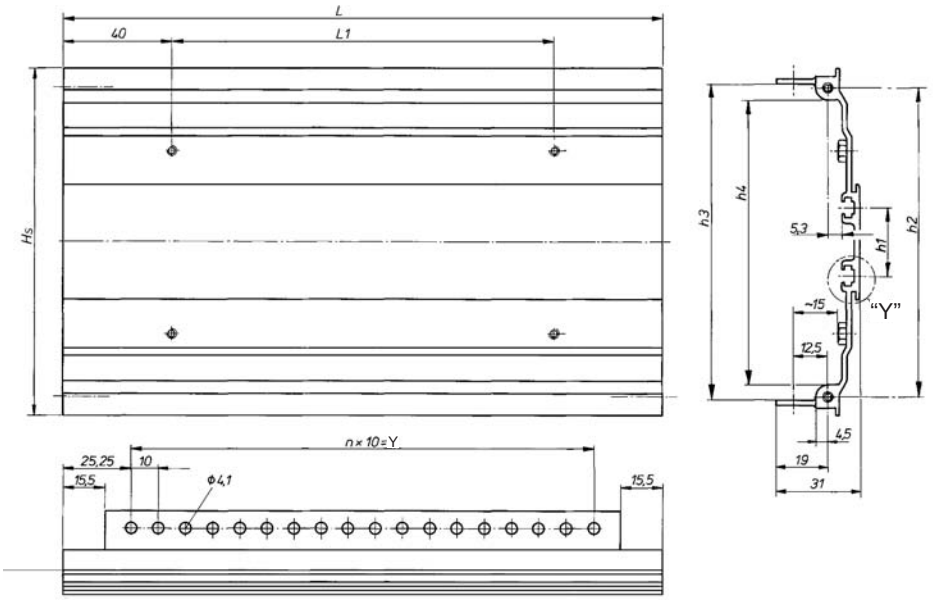

A3-304a

Detail "Y"

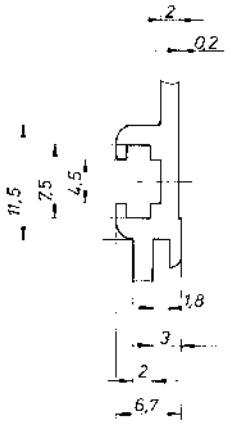

A3-304b

Dimensions table

Height in U	H	h_1	h_2	h_3	h_4	L	L_1	(n)	Y	t
2	82.6	–	68.0	71.4	59.0	220.5	140.5	17.0	170	254.5
2	82.6	–	68.0	71.4	59.0	280.5	200.5	23.0	230	314.5
2	82.6	–	68.0	71.4	59.0	340.5	260.5	29.0	290	374.5
3	127.0	24.0	112.5	115.8	103.5	220.5	140.5	17.0	170	254.5
3	127.0	24.0	112.5	115.8	103.5	280.5	200.5	23.0	230	314.5
3	127.0	24.0	112.5	115.8	103.5	340.5	260.5	29.0	290	374.5
4	171.0	68.5	157.0	160.3	148.0	220.5	140.5	17.0	170	254.5
4	171.0	68.5	157.0	160.3	148.0	280.5	200.5	23.0	230	314.5
4	171.0	68.5	157.0	160.3	148.0	340.5	260.5	29.0	290	374.5
6	260.4	157.1	245.9	248.9	236.5	220.5	140.5	17.0	170	254.5
6	260.4	157.1	245.9	248.9	236.5	280.5	200.5	23.0	230	314.5
6	260.4	157.1	245.9	248.9	236.5	340.5	260.5	29.0	290	374.5

Schroff®

Established as one of the best



Worldwide market competence. Local to you.



As a partner for the global electronics industry we are established as one of the best.

As an international company, Schroff takes advantage of the opportunities offered by globalisation. Manufacturing and development locations in Europe, America and Asia make worldwide market competence possible in the first place. Decentralised marketing and distribution networks with over 50 representations worldwide guarantee both closeness to our customers and optimal satisfaction of local market demands.

www.schroff.biz

Clear order information in the catalogue.

Detailed product descriptions on the Internet.



39601-451 03/2009

Pentair
Technical Products