THIS DOCUMENT IS THE PROPERTY OF KEYSTONE ELECTRONICS CORP. AND SHALL NOT BE REPRODUCED, DISTRIBUTED OR USED AS A BASIS FOR MANUFACTURE WITHOUT PRIOR WRITTEN PERMISSION FROM KEYSTONE ELECTRONICS CORP.

ACTUAL SIZE

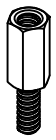

P/N 24337

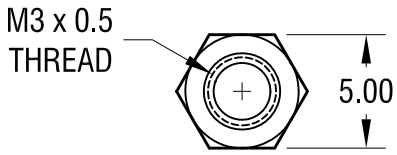

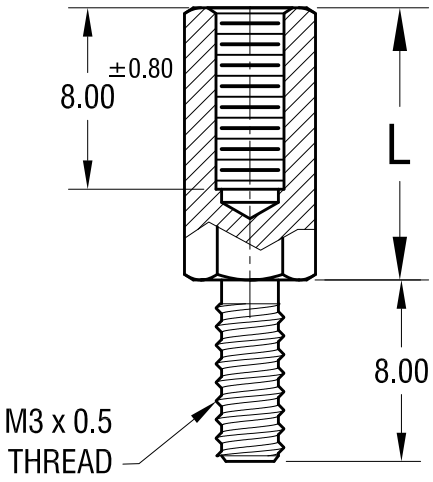

PART NO.	'L' DIM.
24337	10.00
24338	12.00
24339	15.00
24340	18.00
24341	20.00
24342	25.00

NOTE:

1. ALL DIMENSIONS ARE IN MILLIMETERS

DATE	DESCRIPTION	REV.

KEYSTONE ELECTRONICS CORP.

www.keyelco.com ● NEW HYDE PARK, NY 11040 ● Tel (516) 328-7500

PART NAME: 5 mm HEX M/F STANDOFF

MATERIAL: ALUMINUM

FINISH: CLEAR IRIDITE

DRN BY: BOONE | DATE: 5.08.06

APP'D: RH | SCALE: 3X

TOLERANCES INCH [MM]
DECIMAL ± .005 [± 0.13]
ANGULAR ± 1°
UNLESS OTHERWISE SPECIFIED

CODE: C

DWG NO.: 24337- 24342