Pomona®

Model 2420
Size B Aluminum Box With Cover
BNC Female To Type N Male

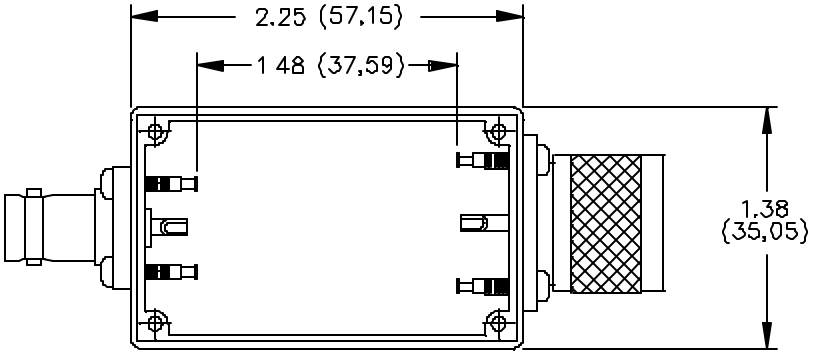

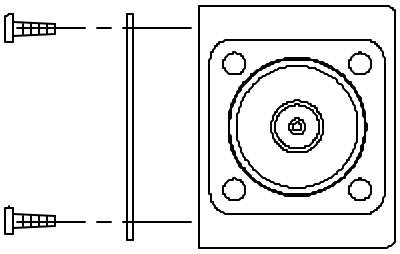

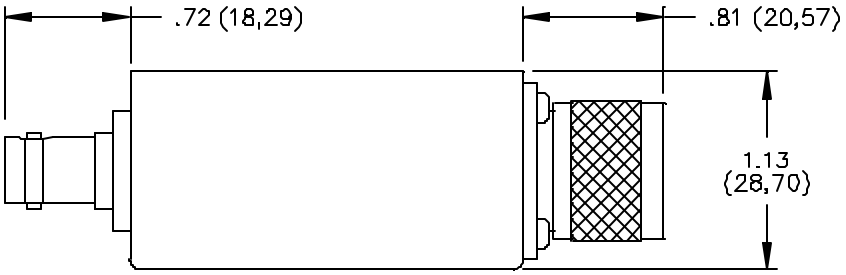

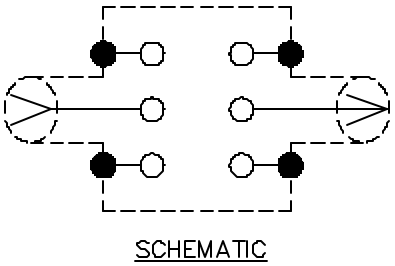

MATERIALS:

Connector: BNC (M) & BNC (F)

Body: Tarnish Resistant Plating, Center Contact: Male – Gold Plated Brass, Female - Gold Plated Beryllium Copper, Solder Turret Terminal Screws: Steel

Shielded Housing: Die cast aluminum alloy A380 or A384.

Finish: Blue paint per Federal Standard 595 #25109 over Phosphoric Etch

Cover: .040 thick aluminum 1100-H14

Finish: Clear anodized

Marking: "Pomona 2420"

Screws: 4 each #2-32 x ¼" Pan Head self-tapping. Steel.

RATINGS:

Operating Voltage: Inner conductor/Shield: 500 VRMS Max.

Operating Temperature: -55ºC to +150ºC

Nominal Impedance: 50 Ohms

ORDERING INFORMATION: Model 2420

All dimensions are in inches. Tolerances (except noted): .xx = ±.02" (,51 mm), .xxx = ± .005" (,127 mm).
All specifications are to the latest revisions. Specifications are subject to change without notice.
Registered trademarks are the property of their respective companies. Made in USA

Sales: 800-490-2361 Fax: 888-403-3360
Technical Assistance: 800-241-2060

Mouser Electronics

Authorized Distributor

Click to View Pricing, Inventory, Delivery & Lifecycle Information:

Pomona:
2420