AIRPAX®

209 Series

Magnetic Circuit Protectors



Introduction • ***187***

249 Power Selector System • ***189***

Multi-Pole • ***191***

Configurations • ***193***

Operating Characteristics • ***195***

Delay Curves • ***196***

Specifications • ***199***

Decision Tables • ***201***



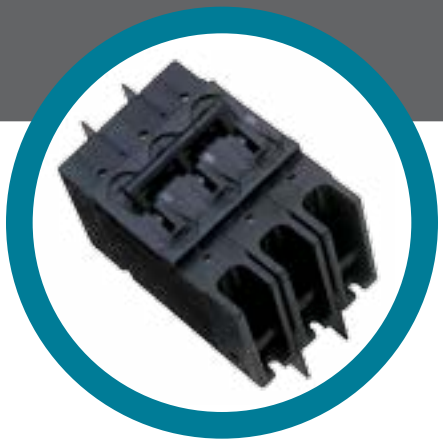

AIRPAX® | 209/219/229/249/279 Series

Hydraulic Magnetic Circuit Protectors

INTRODUCTION

The 209, E-Frame circuit breaker combines power switching with accurate, reliable circuit protection in a compact single or multi-pole unit. The unit is ideal for branch circuit applications such as EDP, air conditioners, panel boards and lighting controls.

The 209 is actually a family of circuit breakers available in one through six pole assemblies with a variety of configurations and terminal styles to meet your application needs. First in this family is the 209, a general purpose E-Frame circuit breaker which complies with UL Standard 489. Other members of the family include the 219, for manual controller applications, which complies to UL Standard 508, the 229, for supplementary protectors applications, which complies to UL Standard 1077, and the 299, a Special Construction version.

Utilizing the hydraulic-magnetic principle, the 209 family adapts itself to local applications and environments. Temperature conditions, which affect fuses and other thermal devices, are not a concern. The magnetic /ampere turn principle minimizes nuisance tripping due to temperature variations.

Inrush currents, due to ferroresonant transformers, lamps and capacitive filters, are now becoming more significant. Recognizing the need for this type of protection, Airpax offers the unique inertial delay which is standard for all 50/60Hz time delay units, but may be deleted where inrush is not a problem. No extra cost or special order is required.

The 209 family of circuit breakers withstands high pulses without tripping or affecting normal delay curves. This performance, however, does not derate or sacrifice protection.

209/219/229 MAGNETIC CIRCUIT PROTECTORS

Terminal Style

209 E-Frame circuit breakers may be specified with either screw terminals, stud or solderless connectors.

A choice of front or back connected terminal styles is available. The back connected terminal style is available with stud terminals only. Front terminal style is available with either screw terminals or solderless connectors.

Refer to Sixth Decision Table for front connected terminal information.

Barriers for back connected terminal styles are supplied on multi-pole units only. Line and load connections may be made to either terminal and terminals will be identified as shown.

DIMENSION "A"	
Number of Poles	**Dimensions "A"**
1	1.026 ± .010 [26.06 ± 3.30]
2	2.072 [52.63] Max
3	3.108 [78.94] Max
4	4.144 [105.26] Max
5	5.180 [131.57] Max
6	6.216 [157.89] Max

Front Connected Solderless Connector (Back Mounted)

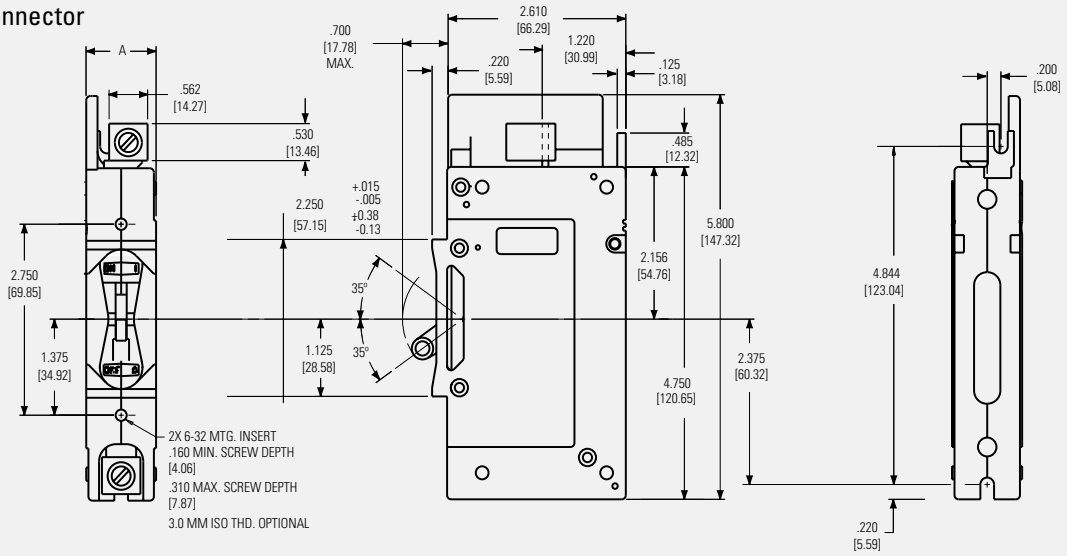

Back Connected Stud Terminal (Front Mounted)

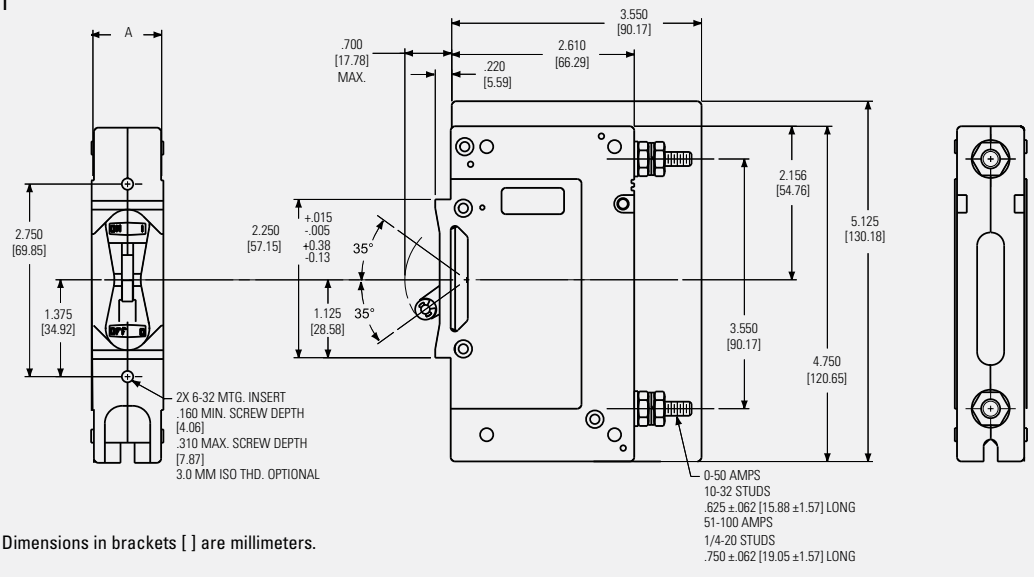

Note: Tolerance ± .015 [.38] unless noted. Dimensions in brackets [ ] are millimeters.

249 POWER SELECTOR BREAKER SYSTEM

The 249 Power Selector Breaker System combines magnetic-hydraulic branch circuit overload protection and a power system selector switch in one device.

The 249 is designed to allow selection of any one of two, three or four independent power systems. This is accomplished with fool-proof sliding-gate handle covers. The number of sliding covers is one less than the number of power systems. With this arrangement, it is impossible to switch "ON" more than one power system at a time.

Since the 249 Power Selector Breaker System is listed as a Branch Circuit Breaker per UL 489 and power switching is accomplished by UL listed breakers, it is usually not necessary to include additional branch service protection.

Standard options available include terminals for front or back connections, choice of trip time delay, current ratings to 100 amperes and single or multi-pole sections.

Trip Time Delay

Three inverse time delays are available to permit close coordination with various loads. Delays 51 and 61 are short delays for electronic loads. Delays 52 and 62 are medium delays for mixed loads. Delays 53 and 63 are long delays for motor loads.

Current and Voltage Ratings

Single pole and multi-pole breaker ratings are available up to 100 amperes, 240Vac or 125Vdc. The special configuration for Marine use has a 120V/240Vac rating for current rating up to 100 amperes.

Master Drawing

Standard circuit breaker terminal and configurations are shown. For other types, consult factory.

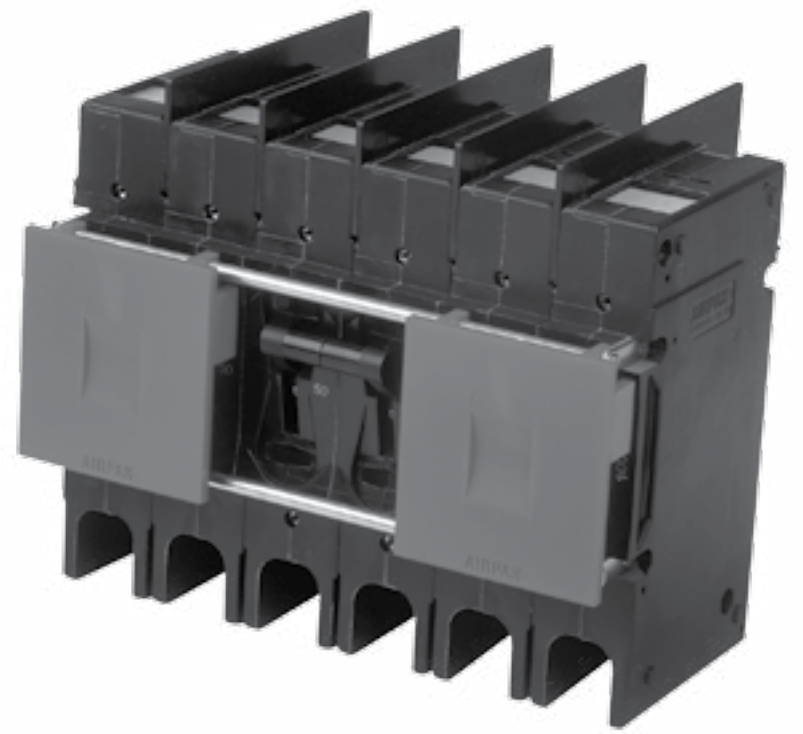

249 Master Drawing

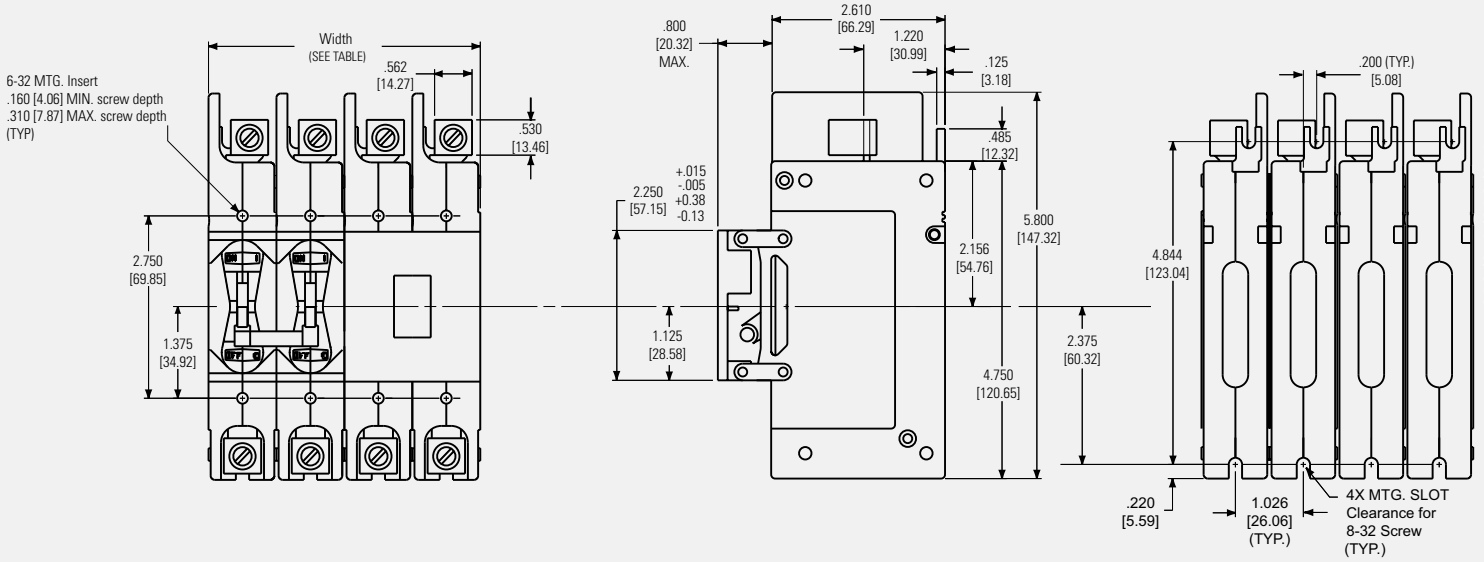

1/4 - 20 Studs

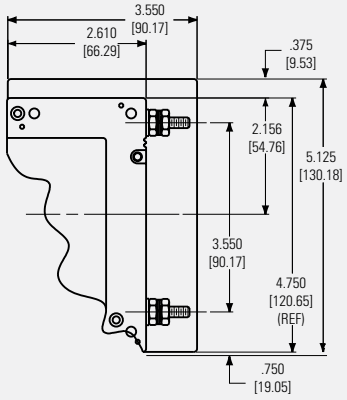

10 - 32 or 1/4 - 20 Screw Terminals

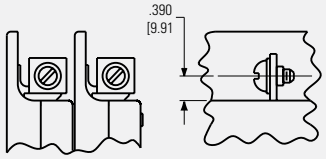

Note: Tolerance ± .015 [.38] unless noted. Dimensions in brackets [ ] are millimeters.

DIMENSIONS	
Number of Poles	**Width**
9	9.324 [236.83] Max
8	8.288 [210.52] Max
6	6.216 [157.89] Max
4	4.144 [105.26] Max
2	2.072 [52.63] Max

209/219/229 MULTI-POLE CIRCUIT PROTECTORS

Common-Trip Construction

All multi-pole protectors contain an internal trip bar which opens all poles in the event of an overload in any pole. Handles are ganged externally for simultaneous actuation.

Individual poles may differ in ratings, delays and configurations, providing an almost limitless number of combinations.

Multi-pole protectors (up to 6 poles) easily satisfy special modern day circuitry. Series, shunt, relay and auxiliary switch construction add to the versatility of design engineering. Airpax's sales engineering force is ready to assist in proper unit selection, both for equipment protection and economical design.

Three Phase, Four Pole Includes Control Protector

Remote shutdown of equipment is sometimes necessary or desirable in today's sophisticated equipment. The 219 four pole assembly fills this need for three phase operation. Three of the four poles are designed for the circuit's proper operating current and over-current protection. The fourth pole may be designed for instantaneous tripping by logic circuitry, interlocks or from a manual remote site or control. The control power required would be quite low, with voltages from 5 to 125Vdc, or 5 to 240Vac available. The fourth pole construction is optional. It may be either series, shunt or relay, depending on the application required. When specifying, both the minimum trip voltage and Hz are required. Factory consultation is readily available.

Front Connected Solderless Connector
(Back Mounted)

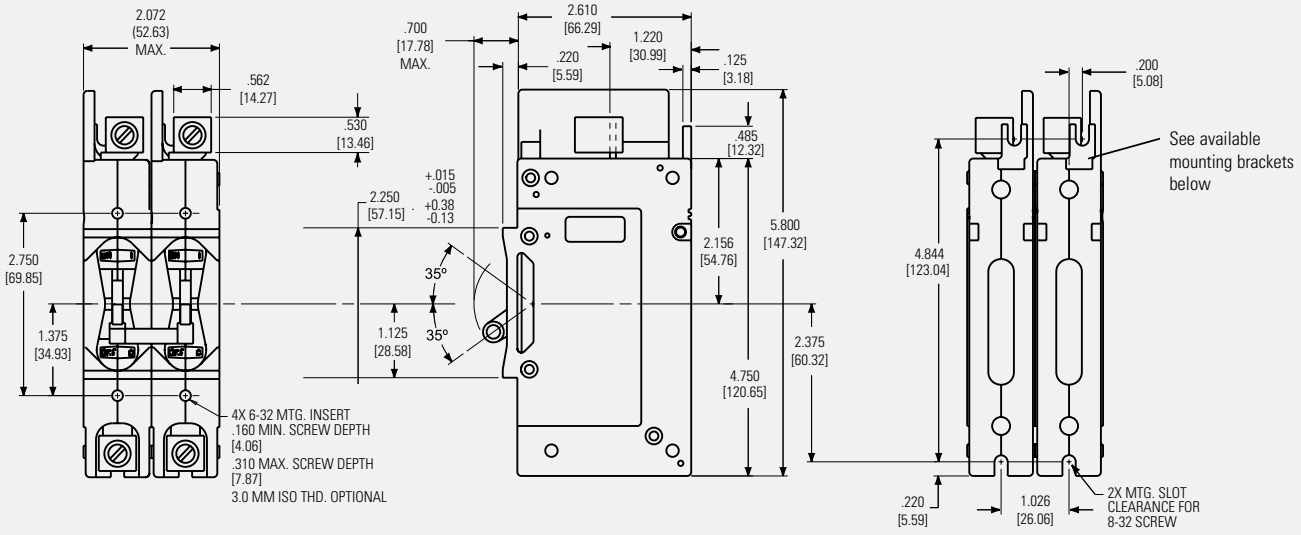

10 - 32 or 1/4 - 20 Screw Terminals

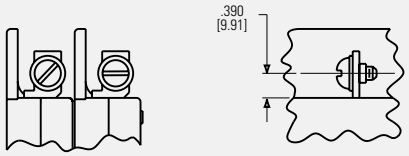

Slotted Mounting Bracket
terminal codes -2, -3, -5,
-7, -3M, -5M, -7M

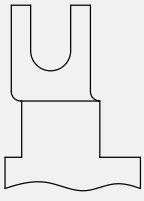

Short Mounting Bracket
terminal codes -2C, -3C,
-5C, -7C

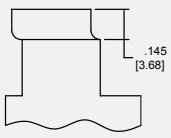

Back Connected Stud Terminal
(Front Mounted)

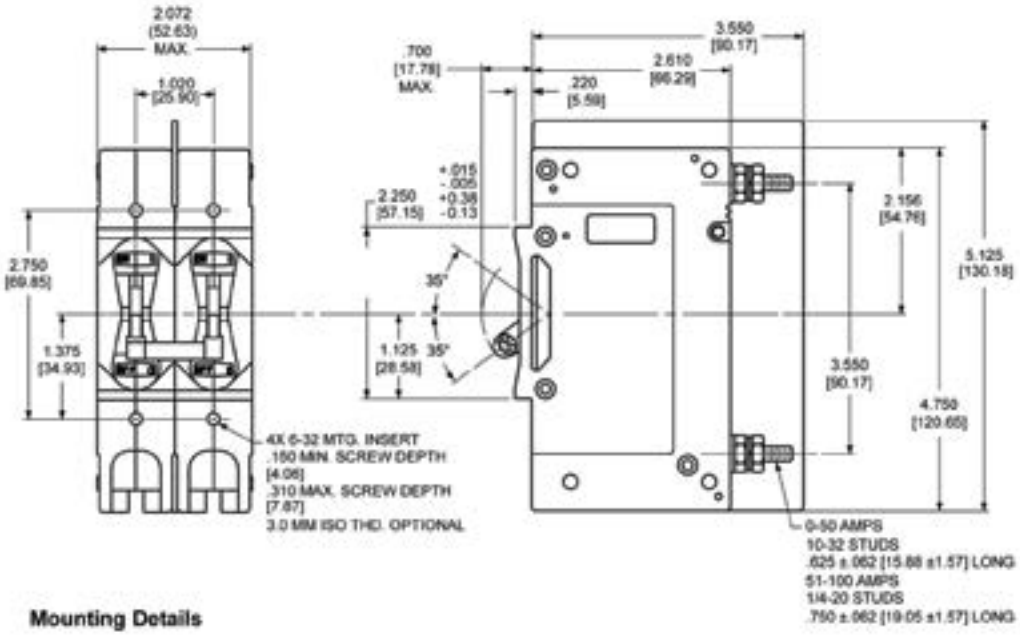

Mounting Details

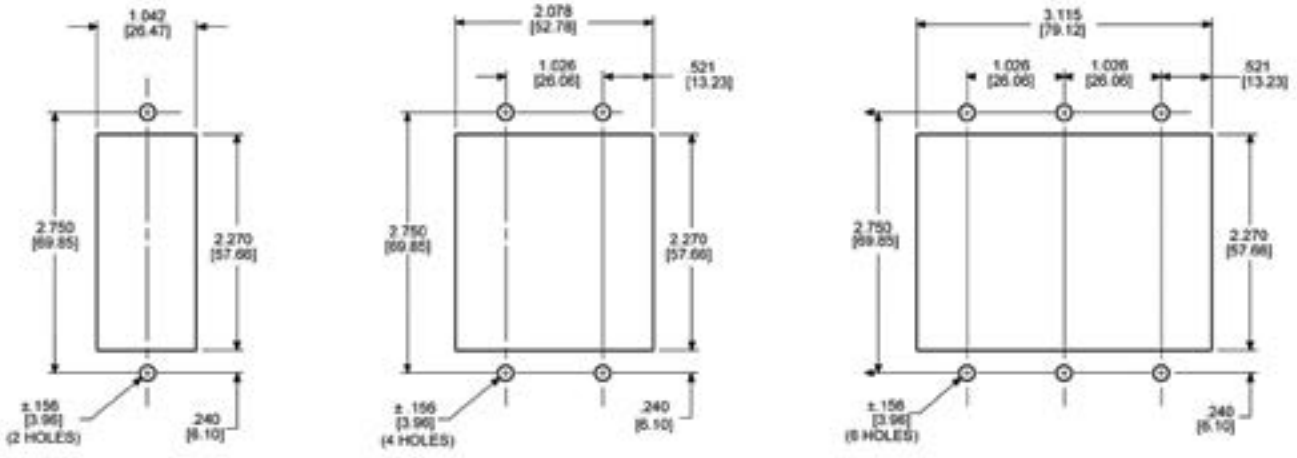

DIMENSIONS	
Number of Poles	**Width**
1	1.026 ± .010 [26.06 ± .254]
2	2.072 [52.63] Max
3	3.108 [78.94] Max
4	4.144 [105.26] Max
5	5.180 [131.57] Max
6	6.216 [157.89] Max

Note: Tolerance ± .015 [.38] unless noted. Dimensions in brackets [ ] are millimeters
Caution: Elongation of mounting holes may be necessary for units with more than 6 poles and units up to 12 poles due to tolerance compounding

229D (MARINE) & 279 (COMMUNICATION)

UL-1500 Ignition Protection

The 229D family is certified to UL-1500 which covers Ignition Protected circuit protectors. This specification requires devices to be used in accordance with the requirements of U.S. Coast Guard and Fire Protection Standard for Pleasure and Commercial Motor Craft, ANSI/ MFPA No. 302.

The ratings available are 100 amperes or less at 65Vdc or 240Vac. Maximum IC, 1000 amperes. Consult factory for application details.

The 299D series is available with interlocking to prevent on board and shore power being used simultaneously.

Combination of ON-OFF switching the protection function offers a simplified solution for your electrical systems.

UL 489A Communications Equipment Protection

The 279 Series complies with the requirements of UL 489A, Circuit Breakers for use in Communication Equipment, meeting the need for protection at higher DC voltages.

The available ratings are 100 amperes or less at 160Vdc. Maximum short circuit interrupting current is 5000 amperes. The 279 series available only in a series trip configuration.

Please consult Sensata for specific application details.

209/219/229 CONFIGURATIONS

Series Trip

The most popular configuration for magnetic protectors is the series trip, where the sensing coil and contacts are in series with the load being protected. The handle position conveniently indicates circuit status. In addition to providing conventional overcurrent protection, it's simultaneously used as an ON-OFF switch.

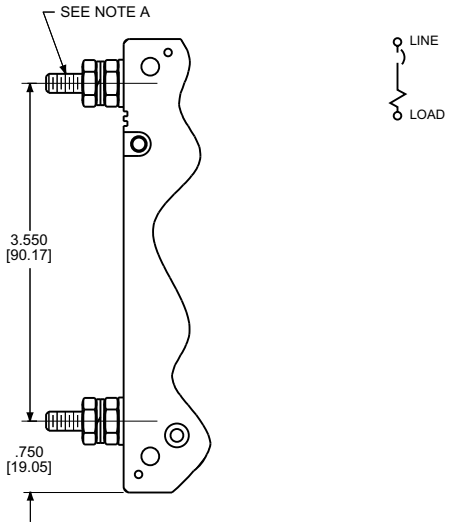

Auxiliary Switch

This is furnished as an integral part of a series pole in single or multi-pole assemblies. Isolated electrically from the protector's circuit, the switch works in unison with the power contacts and provides indication at a remote location of the protector's ON-OFF status.

(Applies to Series Trip Only)

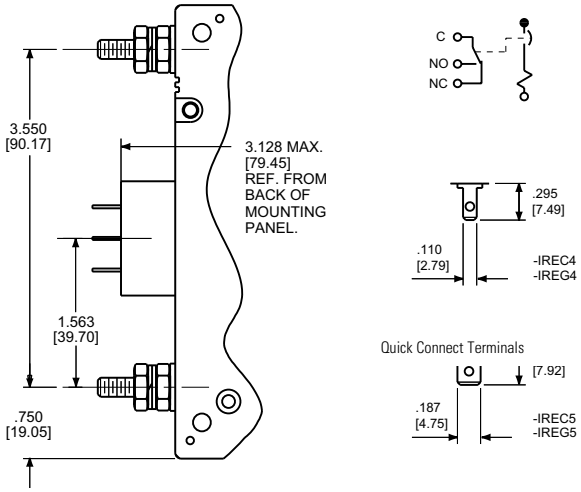

219/229 CONFIGURATIONS

Relay Trip

This permits the overload sensing coil to be placed in a circuit which is electrically isolated from the trip contacts. The coil may be actuated by sensors monitoring pressure, flow, temperature, speed, etc. Other typical applications include crowbar, interlock and emergency/rapid shutdown circuitry. Trip may be accomplished by voltage or current, which must be removed after trip.

Dual Coil

Providing for both a voltage trip and a current trip function in a magnetic circuit protector is common practice. These two coil protectors provide remote or automatic opening of one or more circuits with a low level signal.

The voltage coil will trip the protector instantaneously while the current coil provides normal inverse time delays. The voltage coil is not rated for continuous duty and therefore, the voltage must be removed when the breaker trips.

Since both coils are housed within the same pole, the space savings are substantial.

This option is not available with 64, 65 or 66 delays.

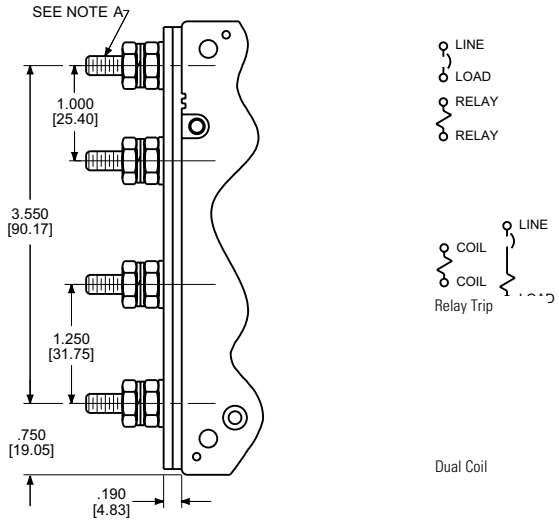

Shunt Trip

The shunt trip is designed for controlling two separate loads with one assembly. The control is established by providing overload protection for the critical load. When the current through this load becomes excessive and reaches the trip point, the protector will open and remove power from both loads simultaneously. The total current rating of both loads must not exceed the maximum contact rating.

Voltage Trip

Sometimes called “dump circuits” or “panic trip circuits,” these units make it possible to open main power contacts with lower power inputs from one or more sources. This configuration is becoming increasingly more important for sensitive circuitry and denser packaging in automation systems.

Available in series, shunt or relay configurations.

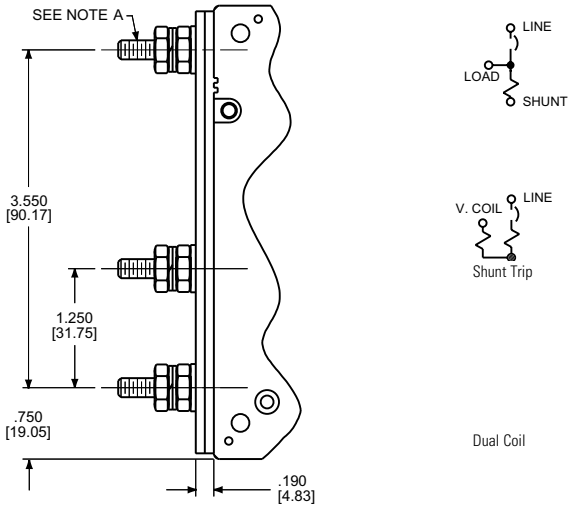

Note:
Tolerance ± .015 [.38] unless noted. Dimensions in brackets [ ] are millimeters.
A: 0-50 Amps, 10-32 Studs .625 ± .062 [15.88 ± .157] Long, 51-100 Amps, 1/4 - 20 Studs, .750 ± .062[19.05 ± .157] Long.

OPERATING CHARACTERISTICS

Inrush Pulse Tolerance

The table shown above provides a comparison of inrush pulse tolerance with and without the inertial delay feature for each of the 50/60Hz delays. Pulse tolerance is defined as a single pulse of half sine wave peak current amplitude of 8 milliseconds duration that will not trip the circuit breaker.

The table at right provides a reference guide for selecting the inertial delay feature. Consult factory for further assistance.

INRUSH PULSE TOLERANCE

Delay	Pulse Tolerance
61, 62, 63	8 times rated current
64	minimum 20 times rated current
65	minimum 25 times rated current
66	minimum 30 times rated current

Note: These limits do not apply to dual coil and tapped coil units

PERCENTAGE OF RATED CURRENT VS TRIP TIME IN SECONDS AT +25°C

Delay	100%	125%	150%	200%	400%	600%	800%	1000%
41 & 41F	No Trip	May Trip	.6 to 7	.2 to 2	.03 to .40	.01 to .1	.009 to .060	.008 to .050
42 & 42F	No Trip	May Trip	7 to 70	2 to 20	.1 to 3	.01 to .2	.009 to .09	.008 to .08
43 & 43F	No Trip	May Trip	60 to 500	20 to 200	2 to 30	.01 to .1	.009 to .09	.008 to .08
51 & 51F	No Trip	.4 to 7	.2 to 2	.12 to 1	.03 to .3	.012 to .1	.009 to .07	.008 to .05
52 & 52F	No Trip	8 to 80	2.5 to 45	.7 to 20	.2 to 3	.05 to 1	.01 to .5	.009 to .08
53 & 53F	No Trip	100 to 900	50 to 500	20 to 200	2 to 25	.015 to 5	.01 to .15	.009 to .09
61	No Trip	.6 to 5	.3 to 2	.1 to .8	.03 to .3	.015 to .1	.01 to .07	.009 to .06
62	No Trip	12 to 120	6 to 55	2 to 18	.3 to 3	.05 to 1	.016 to .1	.01 to .08
63	No Trip	70 to 800	45 to 450	20 to 200	2 to 30	.3 to 4	.02 to .25	.012 to .15
64	No Trip	.6 to 5	.3 to 3	.1 to 1.5	.03 to .5	.02 to .4	.01 to .3	.008 to .25
65	No Trip	12 to 100	6 to 50	2 to 18	.3 to 3	.05 to 2	.016 to 1.6	.01 to 1
66	No Trip	70 to 800	45 to 450	20 to 200	2 to 30	.3 to 9	.02 to 5	.013 to 3

*Notes: *279 is available only with DC delays*

209/219/229 DELAY CURVES

50/60 Hz Delay Curves (typ)

A choice of delays is offered for 50/60Hz applications.

Delay 61 is a short delay for general purpose applications. Delay 62 is long enough to start certain types of motors and most transformer and capacitor loads.

Delay 63 is a long delay for special motor applications.

Delays 64, 65 and 66 are the latest 50/60Hz delays with short, medium and long trip times respectively. The patented breaker design provides both increased tolerance to high inrush induced nuisance tripping and longer trip times at 600 percent. These delays are ideally suited for applications where thermal devices are presently used, such as motor protection or where short duration, high inrush currents are experienced. As shown in a typical motor start-up curve, the delay 66 will provide locked rotor and overload protection. Nuisance tripping is avoided, since acceptable short periods of overload will not trip the breaker.

All trip curves and trip currents are specified with the breaker mounted in the normal vertical position at ambient temperature of +25°C. For test and measurement purposes, the breakers should not carry current prior to application of overload for calibration test. For other than vertical mount position, consult factory.

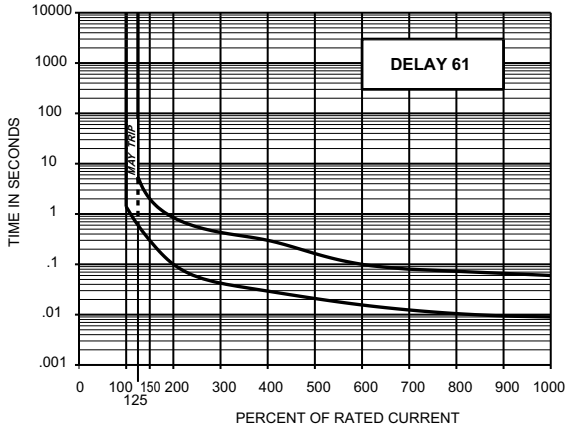

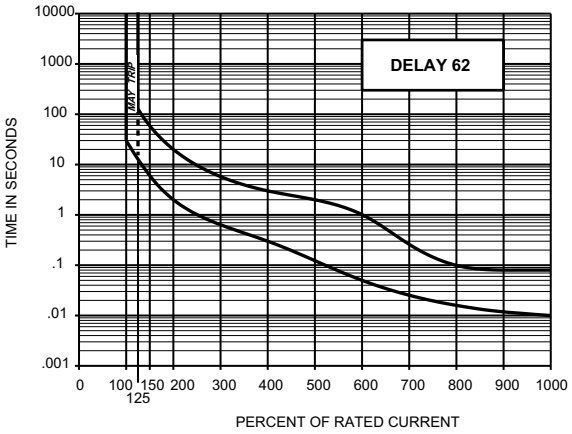

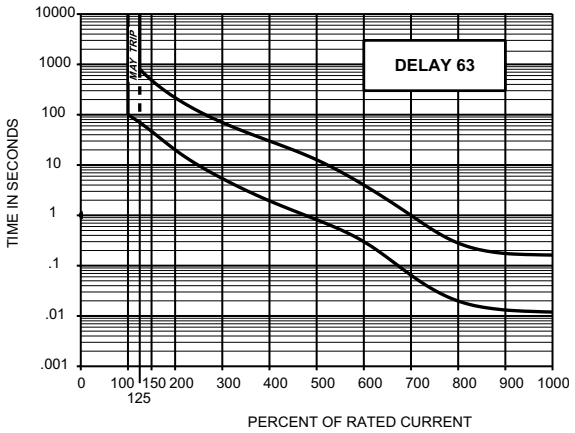

209/219/229/279 DELAY CURVES

60Hz Delay Curves (typ)

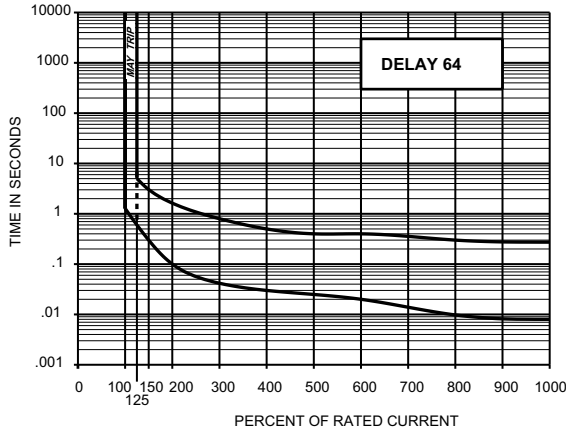

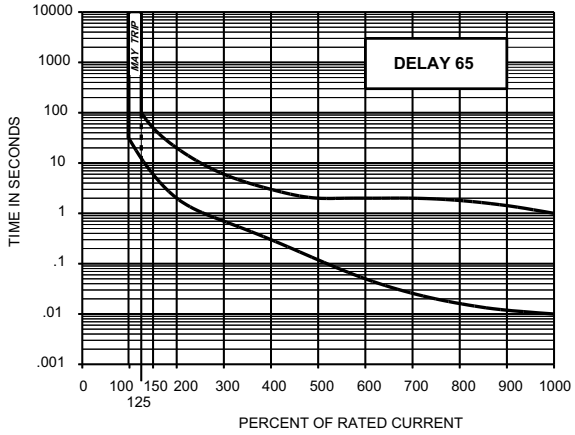

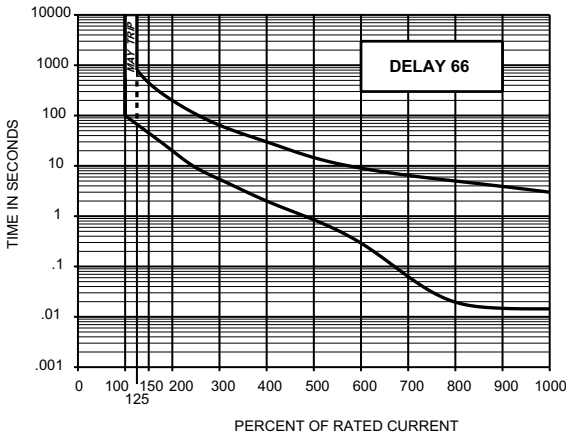

209/219/229 DELAY CURVES

DC Delay Curves (typ)
(279 is available only with DC delays)

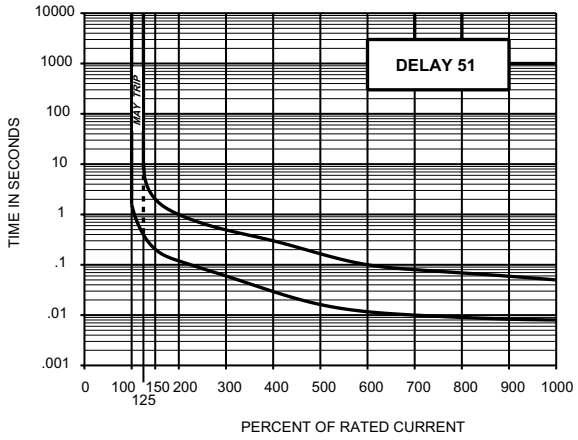

400Hz Delay Curves(typ)

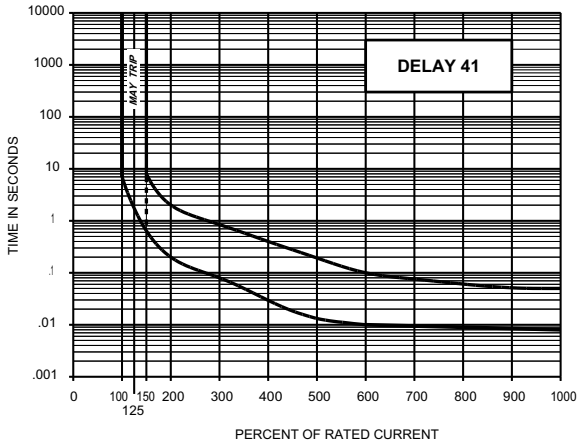

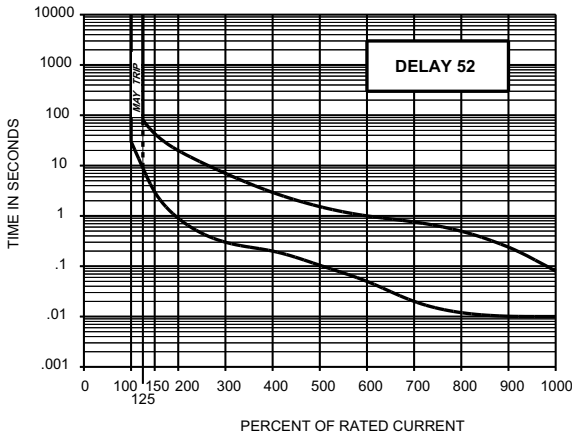

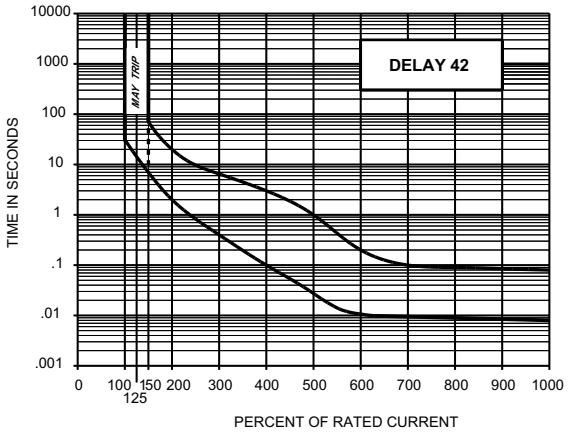

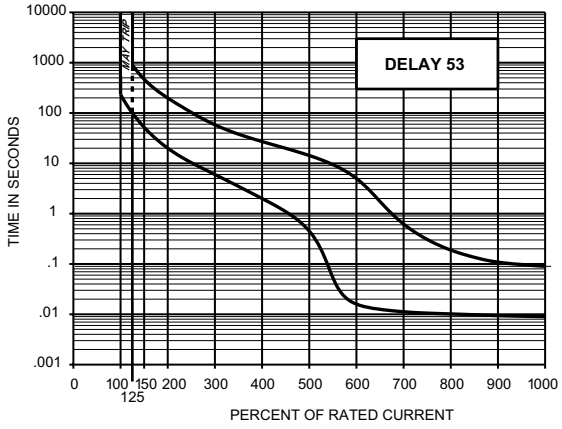

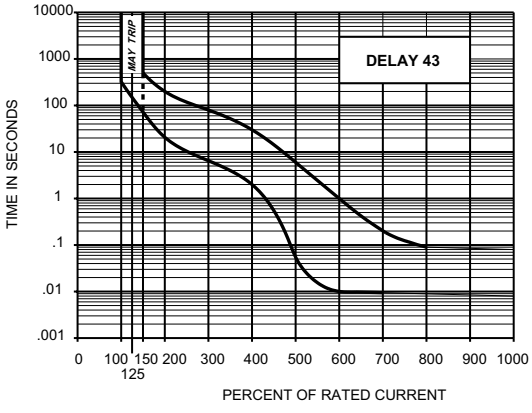

209/219/229 SPECIFICATIONS

NOMINAL DCR / IMPEDANCE

Current Ratings (Amps)	Resistance (ohms)	Impedance (Ohms)
	DC Delays	AC, 50/60Hz Delays
	51, 52, 53	*61, 62, 63*
0.10	112.0	117.0
1.0	0.97	1.0
5.0	.042	.044
10.0	.011	.012
20.0	.0042	.0043
30.0	.0030	.0031
50.0	.0018	.0019
80.0	.0014	.0015
100	.0008	.0009

Notes: DCR and impedance based on 100% rated current applied and stablized a minimum of one hour.
Tolerance: .1 amperes to 1.0 amperes, ± 10%; 1.1 amperes to 5.0 amperes, ± 15%; 5.1 amperes to 15 amperes, ± 25%; 15.1 amperes to 100 amperes, ± 50% or = .001 Ohms, whichever is greater.

APPROXIMATE CIRCUIT BREAKER WEIGHT

# of Poles	Ounces
1	9 oz
2	1 lb, 3 oz
3	2 lb
4	2 lb, 7 oz
5	3 lb
6	3 lb, 12 oz

RECOMMENDED TORQUE SPECIFICATIONS

Component	Torque (in-lbs)
6-32 Mounting Inserts	6 to 8
M3 Mounting Screws	4 to 5
1/4-20 Screw Terminals	35 to 40
10-32 Stud Terminals	13 to 14
M5 Stud Terminals	13 to 14
1/4 - 20 Stud Terminals	40 to 45

Where applicable, mechanical support must be provide to the terminals when applying torque

Trip Free

Will trip open on overload, even when forcibly held on. This prevents the operator from damaging the circuit by holding the handle in the ON position.

Trip Indication

The operating handle moves positively to the OFF position on overload.

Environmental Specifications

Moisture and fungus resistance is provided by the use of moisture resistant finishes. Special springs and treatment for all ferrous parts eliminate inherent moisture-related problems. The use of fungi inert cases and handles avoids fungus-related problems.

Current Ratings

209/219/229 may be supplied with these ratings: DC, 50/60Hz, 400Hz, 0.1 to 100 amperes. 279 types may be supplied with DC ratings only, 0.1 to 100 amperes.

Voltage Ratings

On 209/219/229, voltages up to and including 240Vac, 50/60Hz or 400Hz, or 125Vdc are available. Multi-pole units can be supplied for 277Vac/480Vac, 50/60Hz. 279 types are available with a voltage of 160Vdc. All units will be marked with the standard maximum voltage. UL Listed breakers will be labeled with the UL listed voltage.

Auxiliary Switch Ratings

When supplied shall be S.P.D.T. configuration with a maximum rating of 10 amperes 250Vac.

Mounting Considerations

A three-inch spacing must be provided between the circuit breaker and vent and any conductive surface. If closer than three inches is necessary, then an insulator must be installed on the conductive surface.

Solderless Connectors

Connectors are rated AL9 CU. and accept either copper or aluminum conductors. Units are suitable for use with both 60° and 75° wire. Optional pressure plate for fine stranded wire is available. Contact factory for details.

209 SERIES AGENCY APPROVALS

Volts (Volts)			Rated Current (Amps)		Interrupting Capacity (Amps)	
Voltage (V)	Frequency (Hz)	Min. Poles	UL/CSA	VDE	UL 489 & CSA	VDE
65	DC	1	.10-100	-	25000	-
125	DC	1	.10-100	.10-100	10000	4000
125/250	DC	2	.10-20	-	5000	-
120	50/60	1 only	.10-50	-	10000	-
120/240	50/60	2	.10-100	-	5000	-
120/240	50/60	2 only	.10-50	-	10000	-
240	50/60	1	.10-100	.10-100	5000	4000
240	400	1	.10-100	-	2500	-
279 Circuit Breakers for use in Communications Equipment						
Voltage (V)	Frequency (Hz)	Min. Poles	UL/CSA	VDE	UL489A	VDE
160	DC	1	.10-100	-	5000	-

219 MANUAL MOTOR CONTROLLERS AGENCY APPROVALS

Volts (Volts)			Rated Current (Amps)		Interrupting Capacity (Amps)	
Voltage (V)	Frequency (Hz)	Min. Poles	UL	VDE	UL 508	VDE
125	DC	1	.10-100	.10-100	5000	4000
120/240	50/60	2	.10-100	-	5000	-
120/240	50/60	2	.10-100	-	10000	-
240	50/60	1	.10-100	.10-100	5000	4000
240/415	50/60	2	-	.10-100	-	4000
277	50/60	1	.10-100	-	5000	-
277/480	50/60	2	.10-100	-	5000	-
277/480	50/60	2	.10-100	-	10000(1)	-
480	50/60	2	.10-100	-	10000(1)	-
600	50/60	2	.10-77	-	10000(1)	-
250	400	1	.10-100	-	5000	-
Notes: (1) With 225 A maximum series fuse						

229 SUPPLEMENTARY PROTECTORS* AGENCY APPROVALS

Volts (Volts)								Rated Current (Amps)		Interrupting Capacity (Amps)	
Voltage (V)	Frequency (Hz)	UG	FW	Phase	Min. Poles	TC	OL	UL/CSA	VDE	UL 1077 & CSA No. 235	VDE
125	DC	A, D	0	-	1	1	0	.10-100	.10-100	U2, 10000 / U1, 5000	4000
125	DC	A, D	0, 3	-	1	1	0	.10-100	.10-100	U2, 5000 / U1, 5000	4000
125/250	DC	A, D	0, 3	-	2	1	1	.10-20	-	U1, 5000	-
300	DC	A, D	0, 3	-	2	1	0	.10-100	-	U1, 5000	-
125/250	50/60	A, D	0	1	2	1	1	.10-100	-	U2, 5000	-
125/250	50/60	A, D	0	1	2	1	0	.10-100	-	U1, 10000	-
250	50/60	A, D	0, 3	1	1	1	0	.10-100	-	U1, 5000	-
277	50/60	A, D	0, 3	1	1	1	1	.10-100	-	U1, 5000	-
277/480	50/60	A, D	0	1 & 3	2	1	1	.10-100	-	C2, 10000(1) / C1, 10000	-
277/480	50/60	A, D	0, 3	1 & 3	2	1	0	.10-100	-	U2, 5000 / U1, 5000	-
347/600	50/60	A, D	0	1 & 3	2	1	0	.10-100	-	C1, 10000(1)	-
347/600	50/60	A, D	0, 3	1 & 3	2	1	0	.10-100	-	U1, 5000	-
480	50/60	A, D	0	3	3	1	0	.10-100	-	C2, 10000(1) / C1, 10000	-
600	50/60	A, D	0	3	3	1	0	.10-77	-	C2, 10000(1) / C1, 10000	-
125/250	400	A, D	0, 3	1	2	2	0	.10-100	-	U2, 1500 / U1, 2000	-
229D Supplementary Protectors (Ignition Protected)											
Voltage (V)	Frequency (Hz)	UG	FW	Phase	Min. Poles	TC	OL	UL/CSA	VDE	UL1500 & CSA	VDE
65	DC	A, D	0, 3	-	1	1	1, (0, CSA)	.10-100	-	U2, 1000/U1,1000	-
250	50/60	A, D	0, 3	1	1	1	1, (0, CSA)	.10-100	-	U2, 1000/U1, 1000	
229G Supplementary Protectors (Generator Use – UL489 Field wired)											
Voltage (V)	Frequency (Hz)	UG	FW	Phase	Min. Poles	TC	OL	UL/CSA	VDE	UL1077 & CSA	VDE
277/480	50/60	A, D	0, 3	3	3	1	1	.10-100	-	U2, 2500	-
347/600	50/60	A, D	0, 3	3	3	1	1	.10-77	-	U2, 2000	-
239 Supplementary Protectors (Marine)											
Voltage (V)	Frequency (Hz)	UG	FW	Phase	Min. Poles	TC	OL	UL/CSA	VDE	UL1077 & CSA	VDE
250	50/60	A, D	0, 3	1 & 3	1	1	1	.10-100	-	U1, 5000	-
125/250	50/60	A, D	0, 3	1	2	1	1	.10-100	-	U1, 5000	-
240	50/60	-	-	1 & 3	1	-	-	-	.10-100	-	4000
240/415	50/60	-	-	3	3	-	-	-	.10-100	-	4000
Notes: (1) With 225A maximum series fuse											

*219 also applicable for CSA approval only.

General notes

All supplementary protectors are of the overcurrent (OC) type
The family of protectors has been evaluated for end use application for use group (UG) A and D

The terminals (FW) – Terminals are coded as follows:
0 – Suitable for factory wiring only
1 – Line terminals evaluated for field wiring
2 – Load terminals evaluated for field wiring
3 – Line and Load terminals evaluated for field wiring

The maximum voltage ratings for which the protectors have been tested are shown in the chart

The current is the amperage range that the protectors have been tested

The tripping current (TC) – Tripping Current is coded as a percentage of the ampere rating:
0 – Tripping current is less than 125% of ampere rating
1 – Tripping current is in the range of 125% to 135% of ampere rating
2 – Tripping current is more than 135% of ampere rating
3 – Tripping current is 135% and meets MCCB trip time requirements

The overload rating (OL) - Designates whether the protector or family of protectors has been tested for general use or motor starting applications.
0 – tested at 1.5 times amp rating for general use
1 – tested at 6 times AC rating or 10 times DC rating for motor starting

The short circuit current rating (SC) – The short circuit rating in amperes following a letter and number designating the test conditions and any calibration following the short circuit test is defined below:
C – Indicates short circuit test was conducted with series overcurrent protection
U – Indicates short circuit test was conducted without series overcurrent protection
1 – Indicates a recalibration was not conducted as part of the short circuit testing
2 – Indicates a recalibration was performed as part of the short circuit testing
3 – Indicates recalibration was performed along with the dielectric and voltage withstand for "Suitable for Further Use" rating

209/219/229/279 DECISION TABLES

How to Order

The ordering code for 209, E-Frame Circuit Breakers may be determined by following the steps in the decision tables shown here.

The coding given permits a self-assigning part number for standard configurations. Factory part numbers are assigned to units with mixed ratings, combinations of styles or construction not listed in the Third Decision Table, etc. With these, it is suggested that order entry be by description and/or drawings, and a part number will be established.

Additionally, it is standard policy to establish a factory-assigned part number whenever a descriptive drawing exists to insure cross reference, traceability and manufacturing control.

When specifying a breaker for AC motor start or high inrush applications, the peak amplitude and surge duration should be specified for factory assistance in rating selection. 209 is a UL listed circuit breakers under file no. E53739 per UL 489.

279 is a UL listed under file no. E192808 per UL 489A.

219 is a UL recognized "Manual Motor Controller" under file no. E41607 per UL 508.

229 is a UL recognized supplementary protector under file no. E66410 per UL 1077.

For example, the following is the code for a single pole breaker with series trip, 50/60Hz, medium inertial delay, 120/240Vac maximum voltage ratings, solderless connector with mounting foot added to the line side of the breaker to facilitate back panel mounting and a current rating of 10.0 amperes.

To determine the ordering number of your particular 209 unit, simply follow the steps shown. You may use this number to place an order or as a reference for further questions you may have.

1 First Decision

Type

209*	Magnetic Branch Circuit Breaker, UL 489 Listed
219	Manual Motor Controller, UL 508 Recognized
229	Supplementary protector, UL 1077 Recognized
279**	Magnetic Circuit Breakers for use in Communication Equipment, UL 489A Listed
229D	Marine Ignition Protection, UL 1500 Recognized
299	Special Construction, not UL Listed or Recognized

* U 489 Listed units are rated to 100A maximum
** U 489A Listed units are rated to 160Vdc maximum

2 Second Decision

Poles

-1	Single pole unit
-2	Two pole unit
-3	Three pole unit
-4	Four pole unit
-5	Five pole unit
-6	Six pole unit

Notes:

A 6-32 inserts for front mounting are provided on all units. M3 ISO metric mounting inserts are available and are specified by adding -A at the end of the ordering code above.

B The auxiliary switch is located on the right-hand pole (viewed from terminal end) unless specified otherwise. Auxiliary switches are available on all front or back panel mounts (series construction only). If more than one auxiliary switch is specified use "2R" through "6R" as required.

C Line terminals are 10-32 screws for bus connection to 100 amperes. Load terminals are 10-32 screws to 50 amperes and solderless connectors from 50 to 100 amperes.

D An anti-flashover barrier is supplied between poles on all multi-pole versions with 10-32 stud and 1/4-20 stud terminals per UL requirement.

E The standard current values for 100% of rated current are those listed in the Seventh Decision Table. Non-listed values can be readily supplied, in general without delayed delivery. Please contact an Airpax office or sales representative.

3 Third Decision

Configurations

-0	Switch only
-1	Series
-1REC4	Auxiliary switch* (std.) .110 quick connect
-1REG4	Auxiliary switch* .110 quick connect†
-1REC5	Auxiliary switch* .187 quick connect
-3	Shunt (up to 50 amp only)**
-4	Relay (up to 50 amp only)**

† Gold contacts
* Switch is located in the right hand pole (viewed from terminal end) unless otherwise specified.
** Not available in 209 type.

Example:

209 - 1 - 1 - 65 - 3 - 2 - 10 - H - V

1 2 3 4 5 6 7 8

6 Sixth Decision

Terminal Selection

	Terminal	Terminal Connect	Panel Mount
-1	Solderless connector	front	front (Note A)
-2	Solderless connector	front	back*
-2C	Solderless connector	front	back**
-3	10-32 screw (100 amps max.)	bus connect	back (Note C)*
-3C	10-32 screw (100 amps max.)	bus connect	back (Note C)**
-4	10-32 screw (50 amps max.)	front	front
-5	10-32 screw (50 amps max.)	front	back*
-5C	10-32 screw (50 amps max.)	front	back**
-6	1/4 - 20 screw (100 amps max.)	front	front
-7	1/4 - 20 screw (100 amps max.)	front	back*
-7C	1/4 - 20 screw (100 amps max.)	front	back**
-8	10 - 32 stud (50 amps max.)	back	front (Note D)
-9	1/4 - 20 stud (100 amps max.)	back	front (Note D)
-3M	M5 x 0.8 screw (100 amps max.)	bus connect	back (Note C)*
-4M	M5 x 0.8 screw (50 amps max.)	front	front
-5M	M5 x 0.8 screw (50 amps max.)	front	back*
-6M	M6 x 1.0 screw (100 amps max.)	front	front
-7M	M6 x 1.0 screw (100 amps max.)	front	back*
-8M	M5 x 0.8 stud (50 amps max.)	back	front (Note D)
-9M	M6 x 1.0 stud (100 amps max.)	front	front (Note D)

* Back panel mount style supplied with slotted mounting bracket. Solderless connector will accept #14 through 0 copper or #12 through 0 aluminum wire.
** Back panel mount style supplied with short mounting bracket.

4 Fourth Decision

Hz and Delay

Standard		Option
41	400Hz short delay	**41F**
42	400Hz medium delay	**42F**
43	400Hz long delay	**43F**
50	DC instant trip	
51	DC short delay	**51F**
52	DC medium delay	**52F**
53	DC long delay	**53F**
60	50/60Hz instant trip	
61	50/60Hz short delay	
62	50/60Hz medium delay	
63	50/60Hz long delay	
64	50/60Hz short delay (high pulse)	
65	50/60Hz long delay (high pulse)	
66	50/60Hz motor delay (high pulse)	
SW	Switch only (no delay)	

An "F" after any delay denotes high pulse tolerance construction.

5 Fifth Decision

Voltage and Current

	Maximum Voltage	Maximum Current (Amperes)
-1	65Vdc††	100
-2	125Vdc	100
-3	120/240Vac	100
-4	240Vac	100
-5*	277/480Vac†	100
-6	277Vac	100
-7*	600Vac	77
-8*	480Vac †††	100
-9**	160 Vdc	100

* Multi-pole only
** For 279 ratings only
† 240/415Vac iWyeî only for VDE
†† For 229D ratings only
††† Two poles breaking minimum

V = VDE Approved

The shaded areas denote VDE Approval options. This approval requires the addition of a V at the end of the part number. The V will be added to any part number formed entirely from shaded decisions. If non-shaded areas are selected, the unit will not be VDE Approved, but other approvals still apply.

7 Seventh Decision

Current Ratings

Amps	Amps
.1	**10**
.25	**15**
.5	**20**
1	**25**
2	**30**
2.5	**50***
3	**60**
5	**70**
7.5	**100***

Non-Standard currents are available. (Note E).
*Switch only ratings.

8 Eighth Decision

Optional

A	Metric mounting inserts M3 (Note A)
H	International handle markings

Multi-pole units with mixed construction poles numbered left to right when viewed from terminal end.

249 POWER SELECTOR BREAKER SYSTEM DECISION TABLES

How to Order

To evolve a convenient ordering system for most applications, the following code has been developed. If a system is required which is not covered below, please consult factory or describe in detail. The number shown as an example describes a 120 volt, three section system, such as may be used on a boat with a port and starboard shore power receptacle and an AC generator. The breaker rating for the shore power is 30 amperes and for the generator 20 amperes in this example. 1/4 -20 screw type terminals and a medium time delay are specified.

Example:

249 - 6 -C -20 -30 - 30 - 2 - 62 - 1

1 2 3 3 3 4 5 6

1 First Decision

Total Number of Poles

-2	2
-4	4
-6	6
-8	8
-9	9

2 Second Decision

Total Number of Poles

Code	Number of Selections	Breaker Poles Per Section
-A	2	1
-B	2	2
-C	3	2
-D	4	2
-E	2	3
-F	3	3

3 Third Decision

Current Rating (Each Section)

Indicate the actual rating from the list below for each section (left to right when viewed from front.)
-10, **-15**, **-20**, **-25**, **-30**, **-50**, **-60**, **-70**, **-100**

4 Fourth Decision

Terminals

-1*	Box type solderless wire connect
-2	1/4 - 20 screw
-3	1/4 - 20 stud (for back connection)

* -1 box type connector not supplied on 239 marine applications.

5 Fifth Decision

Trip Time Delay

-51 or 51F	Short DC
-52 or 52F	Medium DC
-53 or 53F	Long DC
-61	Short AC
-62	Medium AC
-63	Long AC
-64	Short AC (high pulse)
-65	Medium AC (high pulse)
-66	Long AC (high pulse)

6 Sixth Decision

Application

-1	Marine (239 Breaker)
-2	Industrial (209 Breaker)