SERPAC 232R (user print)

Electronic Enclosures

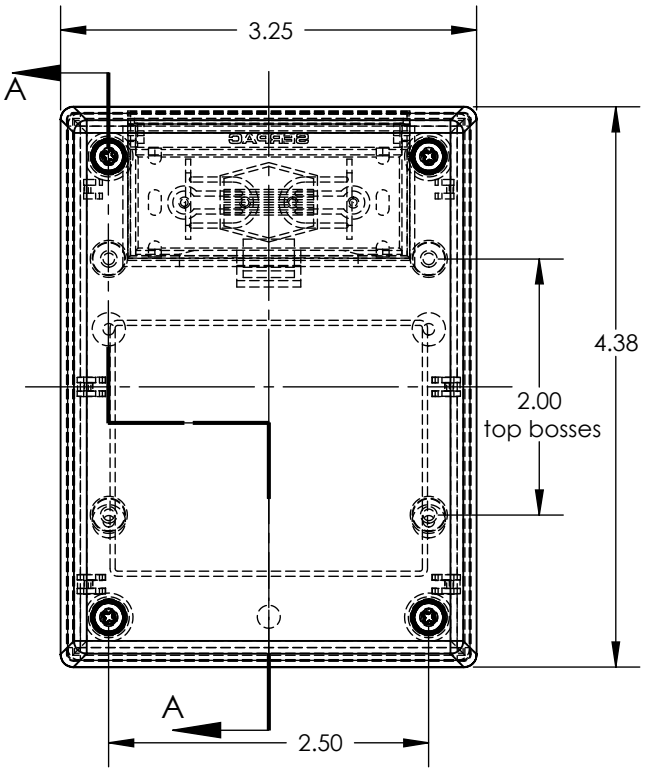

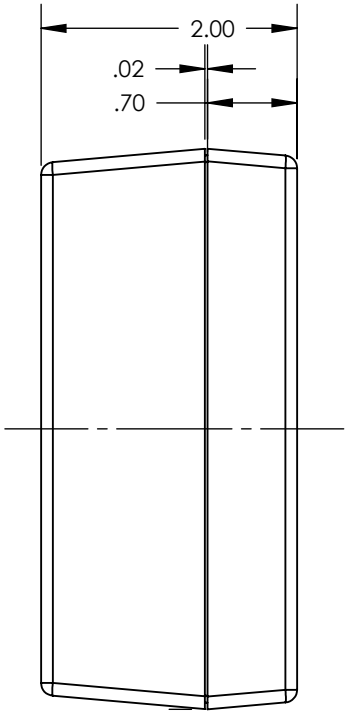

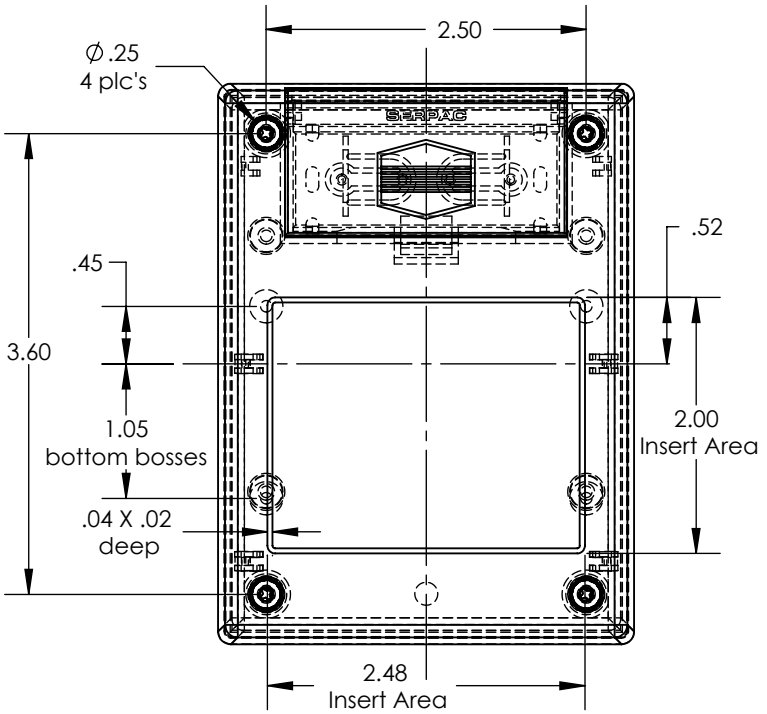

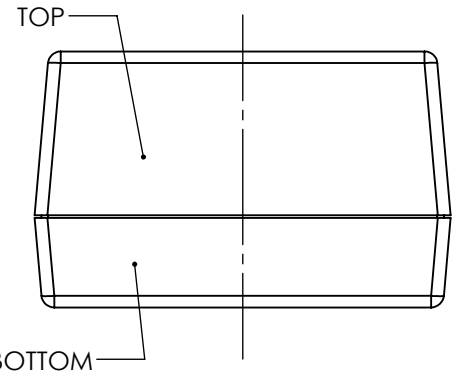

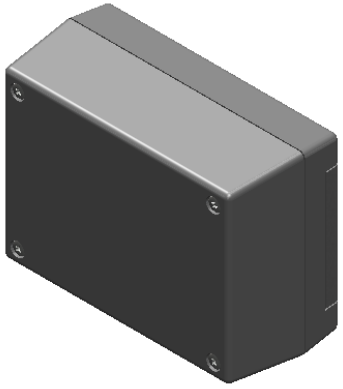

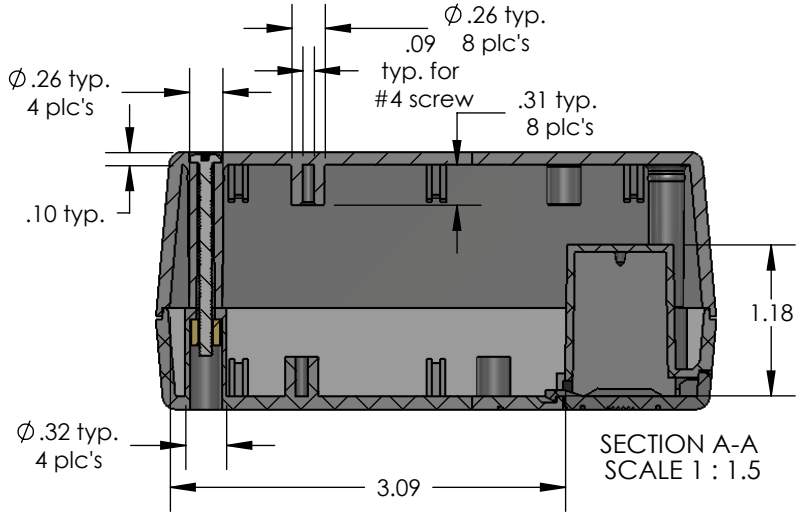

PART NO.	DESCRIPTION (Included)	ACCSESSORIES (Optional)	
3-2R	TOP	PART NO.	DESCRIPTION
23	BOTTOM	50	Non-skid Feet
1025	Battery Cover	339	Prototype grid board (bottom)
6018	4-40 Screws (4)	439	Prototype clad board (bottom)
6102	Threaded Inserts (4)	330/430	Prototype grid / clad board (top)

Notes: Enclosure weight .25 lbs / 114 gm

1) Enclosure meets or exceeds IP40 and NEMA 1
2) Circuit Board drawings can be download at:
   TOP:
http://www.serpac.com/Accessories/CircuitBoard/drawings/330-430-cbg.pdf
   BOTTOM:
http://www.serpac.com/Accessories/CircuitBoard/drawings/339-439-cbg.pdf
3) All components are RoHS Compliant.

ALL DIMENSIONS ARE ± .010" 8/04/10 *(2 of 2)*

2009 Wright Ave. La Verne, CA 91750

Ph. (626) 331-0517 Fx. (626) 331-8584 www.serpac.com