SERPAC 231 (user print)

Electronic Enclosures

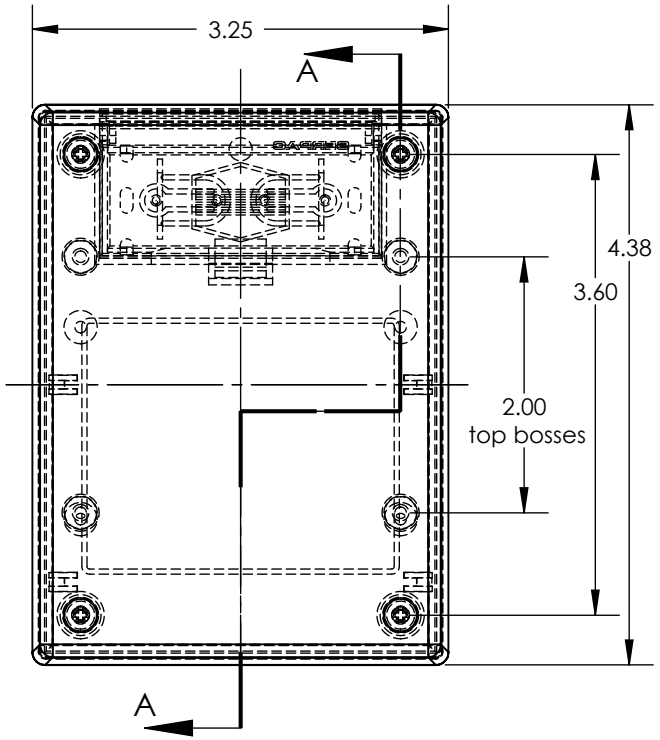

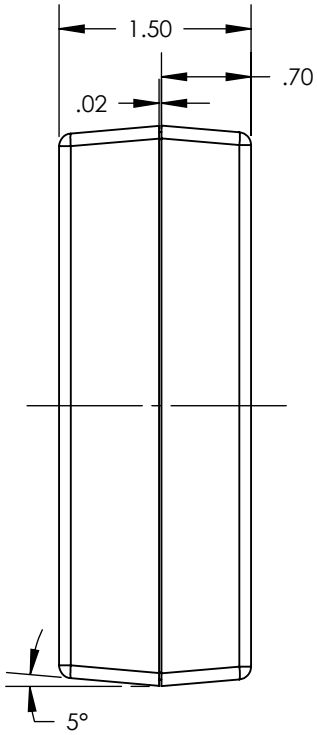

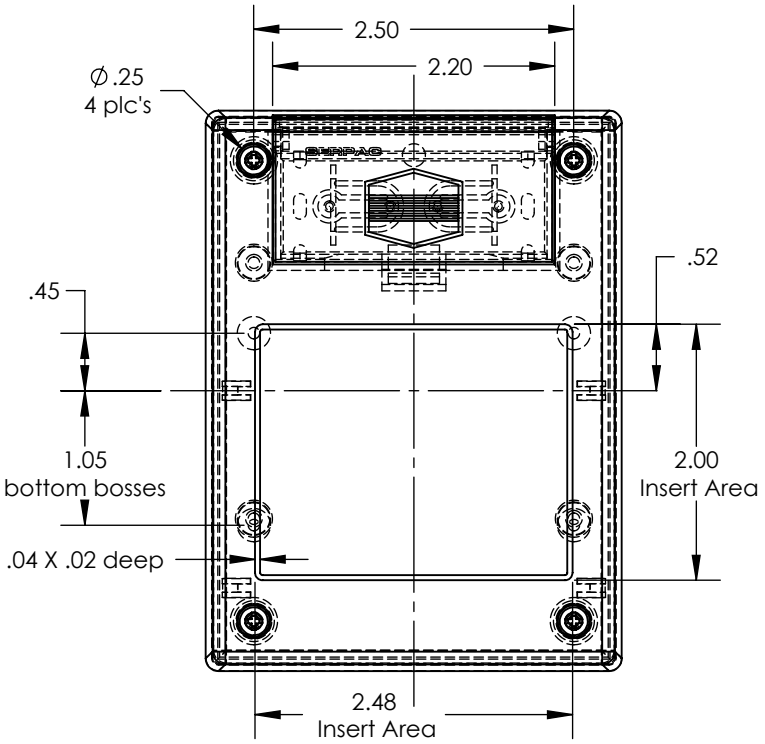

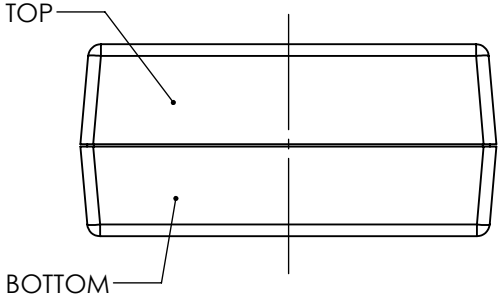

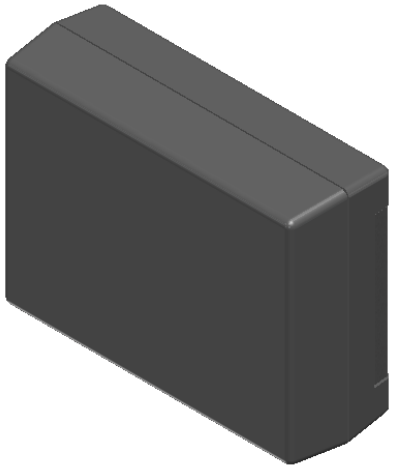

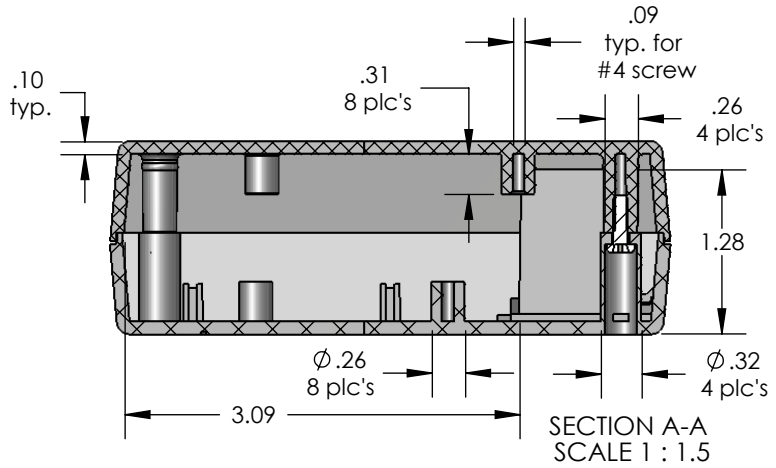

PART NO.	DESCRIPTION (Included)	ACCSESSORIES (Optional)	
3-1	TOP	PART NO.	DESCRIPTION
23	BOTTOM	339	Prototype grid board (bottom)
1025	Battery Cover	439	Prototype clad board (bottom)
6005	#4X3/8" self tapping (4)	330/430	Prototype grid/clad board (top)
		50	Non-skid feet

Notes: (Enclosure weight 0.21 lb / 95 gm)

1) Enclosure meets or exceeds IP40 and NEMA 1
2) Circuit Board drawings can be download at:
http://www.serpac.com/Accessories/CircuitBoard/drawings/339-439-cbg.pdf
3) All components are RoHS Compliant.

ALL DIMENSIONS ARE ± .010" 4/23/12 (2 of 2)

2009 Wright Ave. La Verne, CA 91750
Ph. (626) 331-0517 Fx. (626) 331-8584 www.serpac.com