SERPAC Electronic Enclosures 223Ri (3D exploded)

-Click on image to show toolbar. Use ▶ ❚❚ to Play/Pause Animation.
-Left click and drag on image to move 3D model.

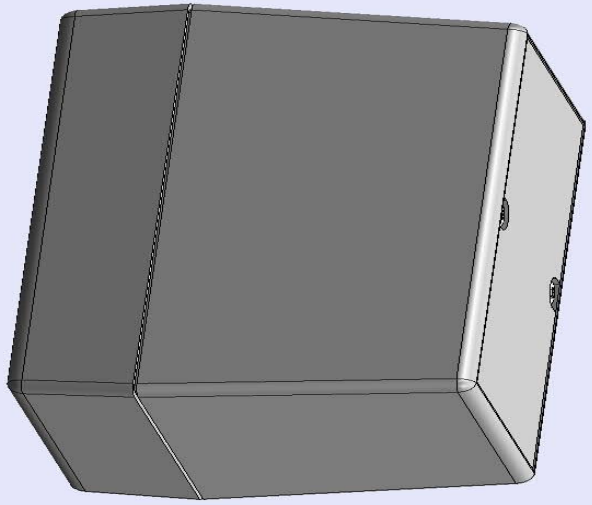

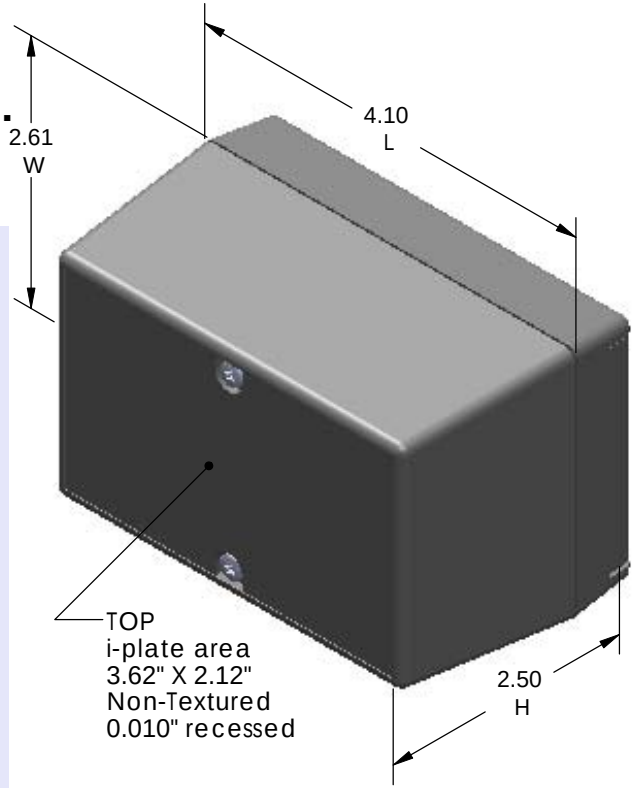

Threaded inserts only have to be assembled the first time.

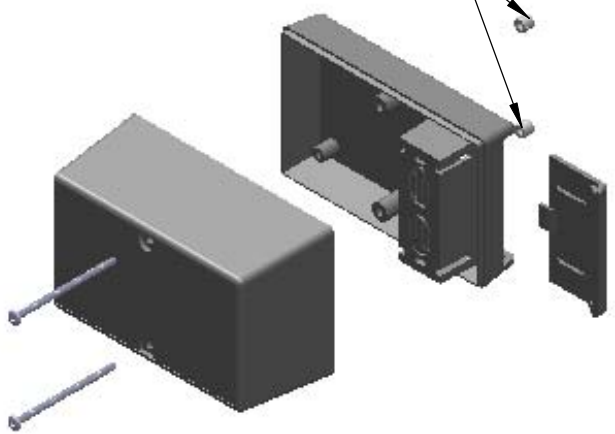

a) Zoom in & out with center wheel.
b) Pause at any moment to view and or print views.
c) Change the views to ortho and section views if needed from the Views pull down menu.
d) Explore options included in the tool bar like: Views, Transparency of model, Lighting type, etc.

PART NO.	DESCRIPTION **(Included)**	ACCSESSORIES **(Optional)**	
2-3Ri	TOP	PART NO.	DESCRIPTION
22	BOTTOM	319	Prototype grid board (bottom)
1025	Battery Cover	419	Prototype clad board (bottom)
6019	4-40 Screws (2)		
6102	Threaded Inserts (2)		

Notes: Enclosure weight .22 lbs / 102 gm
1) Enclosure meets or exceeds IP40 and NEMA 1
2) Circuit Board drawings can be download at:
TOP:
http://www.serpac.com/Accessories/CircuitBoard/drawings/CB_12X.pdf
BOTTOM:
http://www.serpac.com/Accessories/CircuitBoard/drawings/319-419.pdf
3) All components are RoHS Compliant.

2009 Wright Ave. La Verne, CA 91750
Ph. (626) 331-0517 Fx. (626) 331-8584 serpac.com

SERPAC Electronic Enclosures 223Ri (user print)

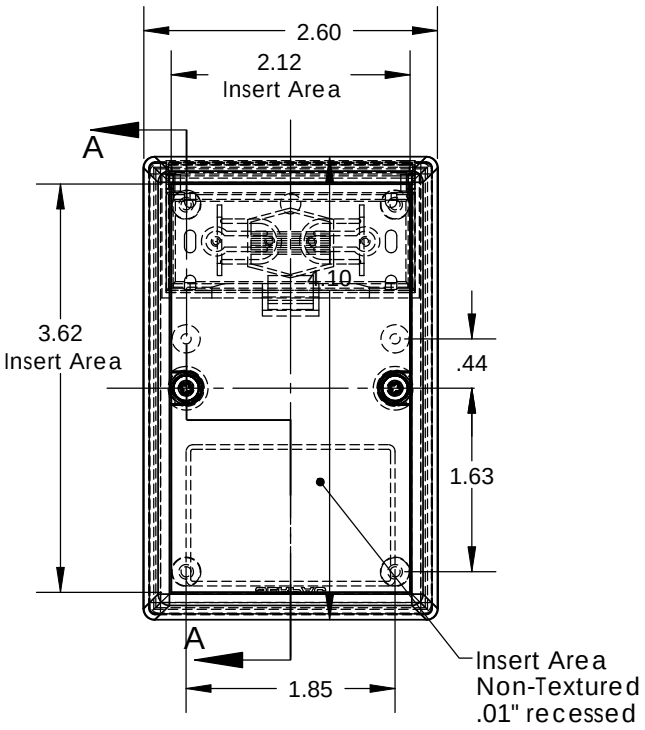

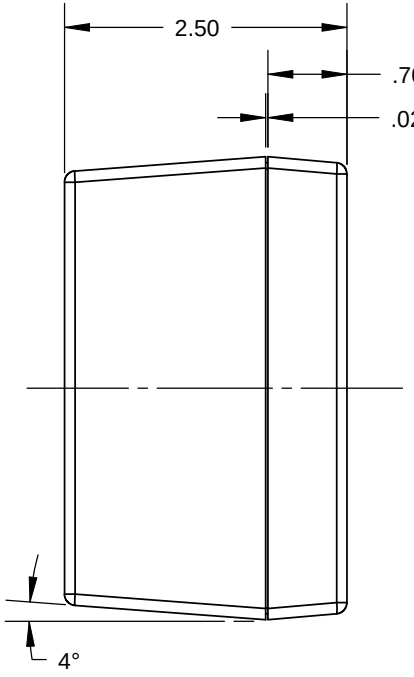

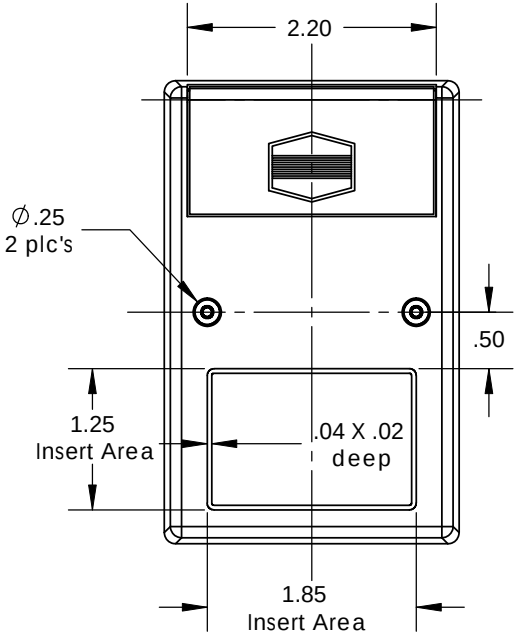

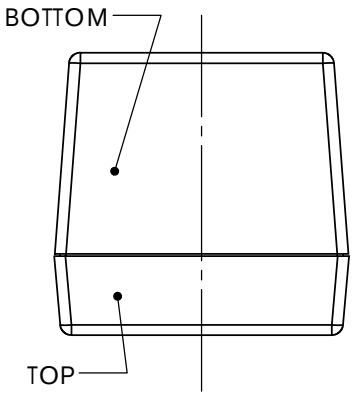



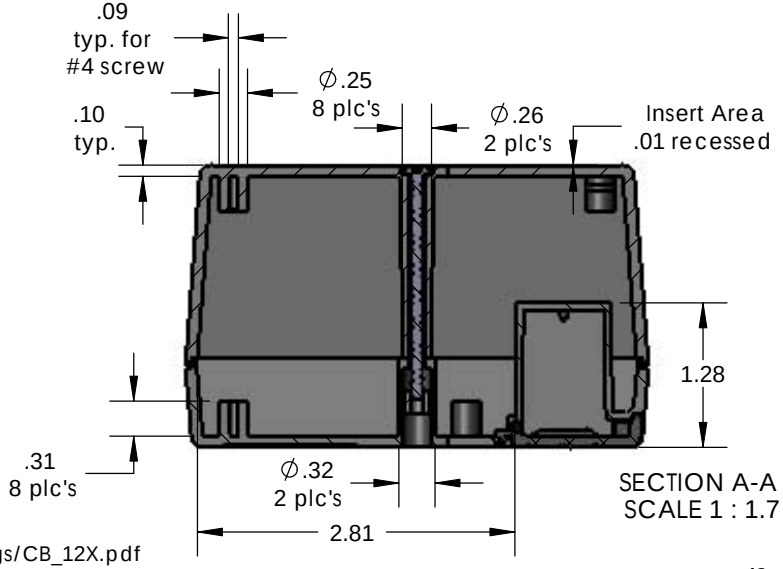

PART NO.	DESCRIPTION (Included)	ACCSESSORIES (Optional)	
2-3Ri	TOP	PART NO.	DESCRIPTION
22	BOTTOM	359	Prototype grid board (bottom)
1025	Battery Cover	459	Prototype clad board (bottom)
6019	4-40 Screws (2)		
6102	Threaded Inserts (2)		

Notes: Enclosure weight .22 lbs / 102 gm
1) Enclosure meets or exceeds IP40 and NEMA 1
2) Circuit Board drawings can be download at:
TOP:
http://www.serpac.com/Accessories/CircuitBoard/drawings/CB_12X.pdf
BOTTOM:
http://www.serpac.com/Accessories/CircuitBoard/drawings/319-419-cbg.pdf
3) All components are RoHS Compliant.

ALL DIMENSIONS ARE ± .010" 8/04/10 (2 of 2)

2009 Wright Ave. La Verne, CA 91750
Ph. (626) 331-0517 Fx. (626) 331-8584 www.serpac.com