THIS DRAWING IS UNPUBLISHED. RELEASED FOR PUBLICATION 20
© COPYRIGHT 20 BY - ALL RIGHTS RESERVED.

REVISIONS

P	LTR	DESCRIPTION	DATE	DWN	APVD
	4	INCREASE MATERIAL THICKNESS	11OCT2016	VL	SS
	A	DRAWING RELEASED	24APR2017	VL	SS
	A1	REVISED PER ECO-17-007644	26MAY2017	VL	SS
	A2	REVISED PER ECO-17-013857	20SEP2017	SS	HL

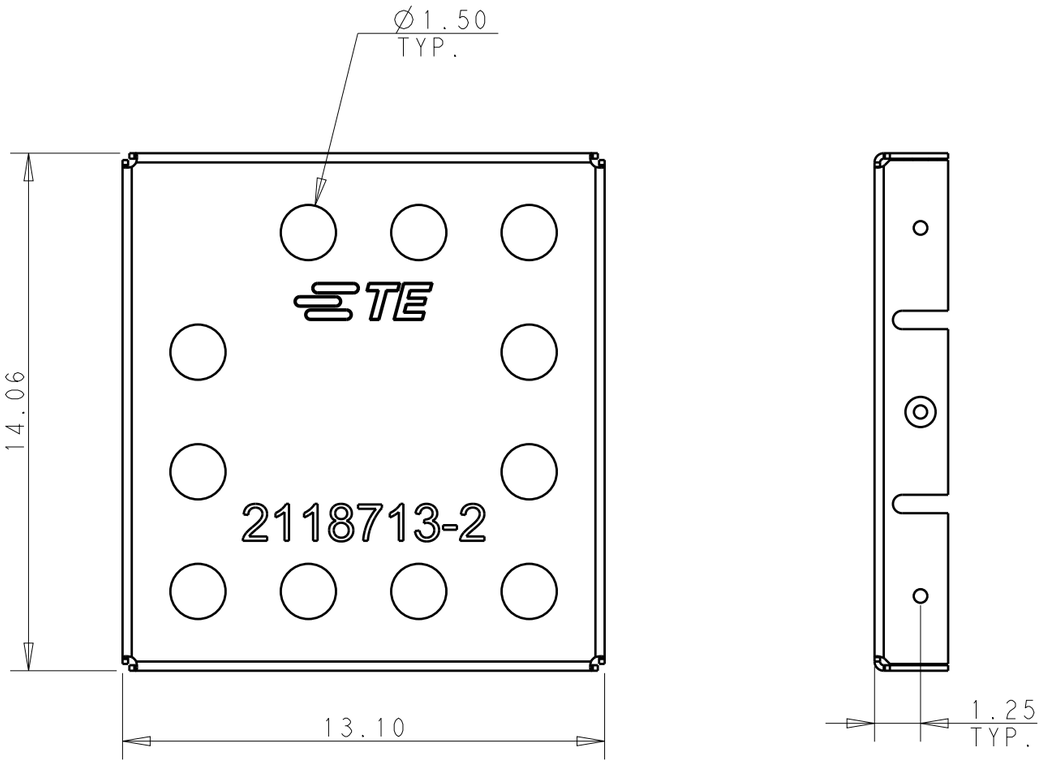

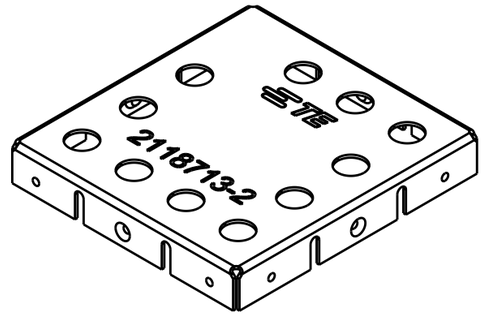

SCALE 4:1

NOTES:

1. MATERIAL: 0.15mm CRS. 1,25 - 3.00µm MATTE TIN FINISH.
2. MATERIAL: 0.15mm AL. 1.20 - 2.00µm MATTE TIN FINISH OVER NICKEL FLASH.
3. STAMPING BURR OUTSIDE OF PART, MAX 0.05mm.
4. PARTS TO BE FREE OF OIL AND CONTAMINENTS.
5. PART IS RoHS COMPLIANT PER TE CONNECTIVITY STANDARD TEC-138-702.
6. REFER TO 3D MODEL FOR UNSPECIFIED DIMENSIONS.
7. PACKAGING: BULK

7	2	2118713-4
7	1	2118713-2
PACKAGING	MATERIAL	PART NUMBER

THIS DRAWING IS A CONTROLLED DOCUMENT.

DIMENSIONS: mm

TOLERANCES UNLESS OTHERWISE SPECIFIED:
0 PLC ±0.20
1 PLC ±0.15
2 PLC ±0.10
3 PLC ±-
4 PLC ±-
ANGLES ±2

MATERIAL: SEE TABLE -

FINISH: SEE TABLE -

DWN V. LAC 06APR2016
CHK S. SU 24APR2017
APVD V. LAC 24APR2017
PRODUCT SPEC 108-19493
APPLICATION SPEC 114-115014
WEIGHT -

TE Connectivity

NAME STANDARD SHIELD COVER

SIZE	CAGE CODE	DRAWING NO	RESTRICTED TO
A3	-	C-2118713	-

CUSTOMER DRAWING | SCALE 6:1 | SHEET 1 OF 1 | REV A2