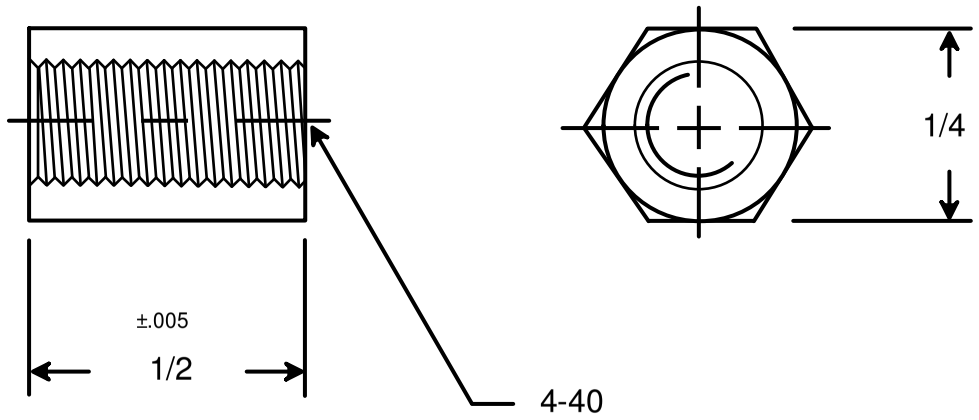

RAF ELECTRONIC HARDWARE
95 SILVERMINE RD. SEYMOUR, CT. 06483
TEL: { 203 } 888-2133
FAX: { 203 } 888-9860
WEB: http://www.rafhdwe.com
a Division of **MW Industries**, Inc.

DRAWING NOT TO SCALE

RoHS COMPLIANT

DRAWN BY : GARY HUPPRICH	DATE 09/23/09
CHECKED BY :	DATE
MATERIAL NYLON	
FINISH	

TOLERANCES
{ EXCEPT AS NOTED }
FRACTION ±.005
DECIMAL ±.005

TITLE
HEX FEMALE STANDOFF

PART NO.
2104-440-N

Mouser Electronics

Authorized Distributor

Click to View Pricing, Inventory, Delivery & Lifecycle Information:

RAF Electronic Hardware:

2104-440-N