

Schroff®

MAIN CATALOG

EQUIPMENT PROTECTION SOLUTIONS | 24TH EDITION | OCTOBER 2012

07 Front panels, plug-in units

Overview 0
Cabinets 1
Wall mounted cases 2
Accessories for cabinets and wall mounted cases 3
Climate control 4
Desk-top cases 5
Subracks/ 19" chassis . . . 6
Front panels, plug-in units . . 7
Systems 8
Power supply units 9
Backplanes . . 10
Connectors, front panel component system 11
Appendix 12

Front panels

- Extensive standard range
- Individual modification to customer requirements: drill holes, cut-outs
- Individual printing
- Front Panel Express



Plug-in units

- Front panels with handles in various designs
  - Extensive standard range
  - Individual modification to customer requirements: drill holes, cut-outs
  - Individual printing
  - Front Panel Express



36106003 (09292001 04612001)

Overview 7.0
Front panels . 7.2
Plug-in units . 7.16
Frame type plug-in units . 7.64
minipac 7.98
PCB accessories .. 7.102
Assembly material 7.107
Modules to mount drive units
see chapter System Accessories . 8.110

Frame-type plug-in units

- To hold and protect PCBs
- High stability
- Outstanding cooling
- With or without EMC shielding

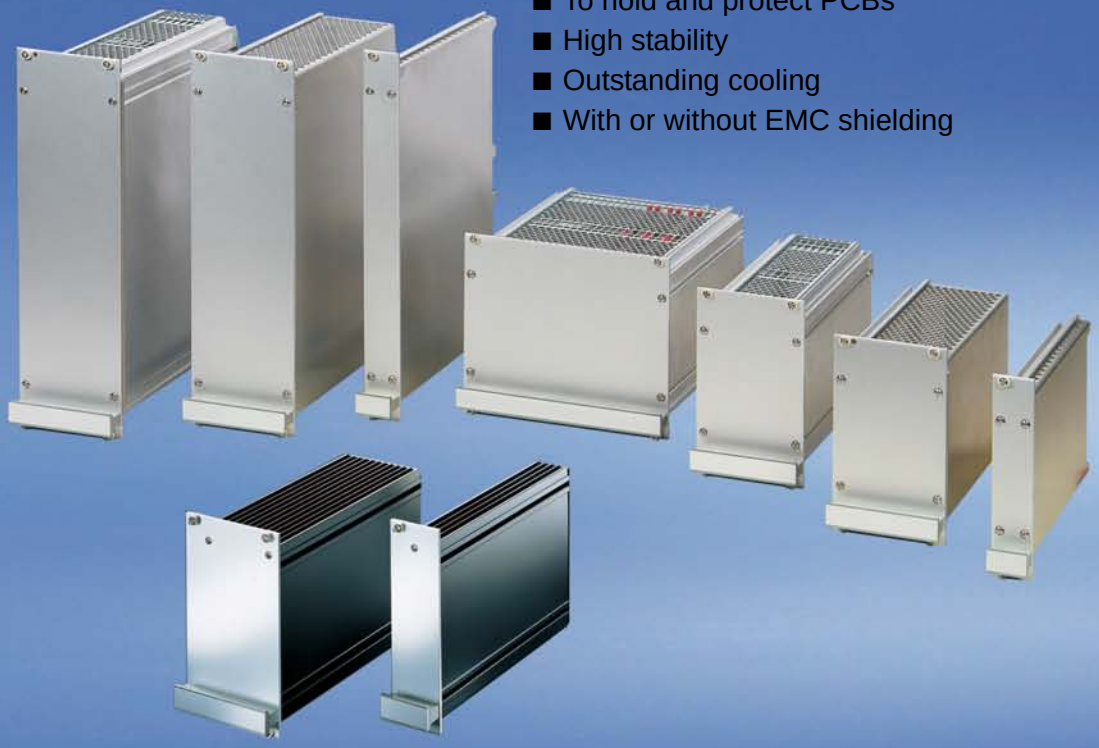

minipac

- Convenient small case - flexible enough for all your requirements
- To accommodate non-standardised or standardised PCBs
- As desktop enclosure, for wall mounting or mounting on a DIN support rail

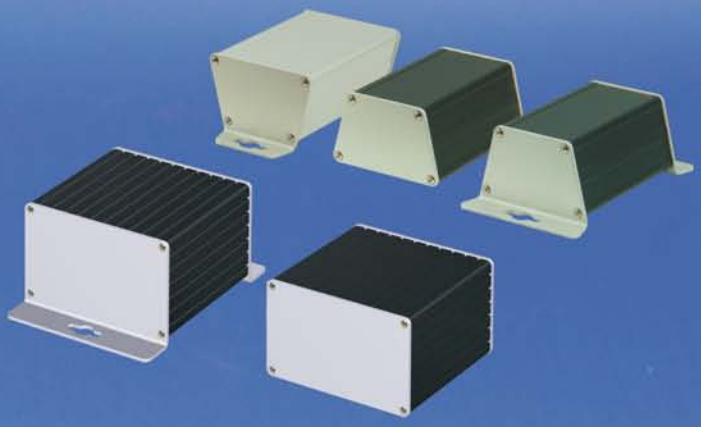

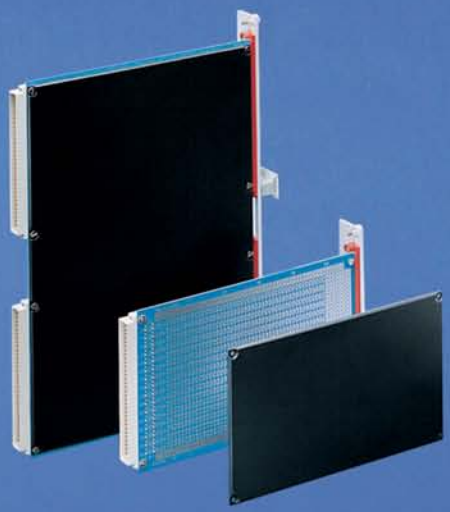

Accessories

- Brackets, handles, covers
- Assembly material
- Tools

36106004 (04802002 04812001 11092008 04995001)

Overview 0
Cabinets 1
Wall mounted cases 2
Accessories for cabinets and wall mounted cases 3
Climate control 4
Desk-top cases 5
Subracks/ 19" chassis . . . 6
Front panels, plug-in units . . 7
Systems 8
Power supply units 9
Backplanes . . 10
Connectors, front panel component system 11
Appendix 12

Front panels

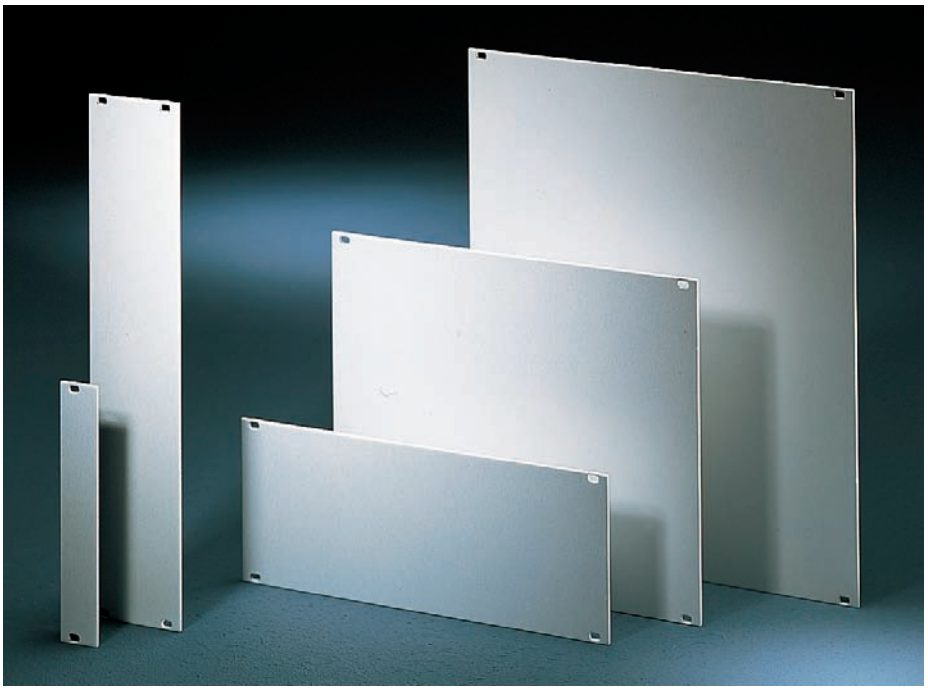

04292001

Standards

- IEC 60297-3-101/IEEE 1101.1/10



30407004

ServicePLUS

e.g. individual colouring
e.g. customised cut-outs
e.g. printing
e.g. mounting service
e.g. special dimensions

www.frontpanelexpress.eu



FRONT PANEL EXPRESS



32304003

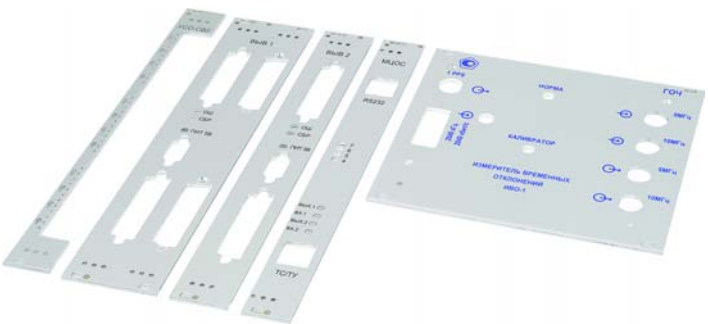

04210001 04603009

Downloads and further important information can be found on the Internet under www.schroff.biz

Front panels

Front panels for fitting in subracks, cases and systems

- **Extensive standard range with various finishes and materials (aluminium or stainless steel)**
- **Front Panel Express: Fast delivery service of customised versions (from 2 days)**
- **EMC shielding retrofittable**



04292001

Front panels, unshielded

- Aluminium, clear anodised
- Aluminium, clear pre-anodised, cut edge untreated
- Aluminium, front anodised, rear iridescent green chromated
- Other finishes on request

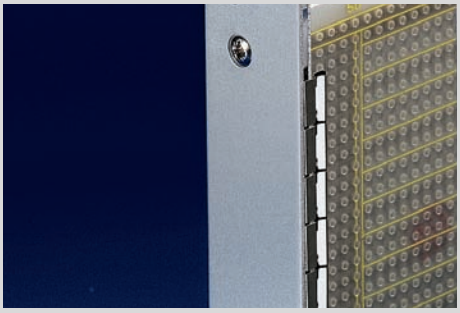

04600006

Front panels shieldable, flat

- With lateral grooves to fit EMC gaskets (stainless steel)
- Compatible with the shielded U profile version



04602004

Front panels, shieldable, U profile

- With lateral groove to fix a textile self-adhesive EMC gasket
- Compatible with the shielded flat version
- High robustness through U profile



04295001 04295002

Further front panels

- Hinged/folding front panels
- Front panels with GND/earthing
- Mezzanine front panels
- AdvancedTCA front panels
- MicroTCA front panels
- AdvancedMC front panels

Front panels

Front panels, unshielded

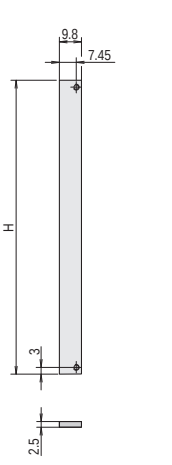

2 HP

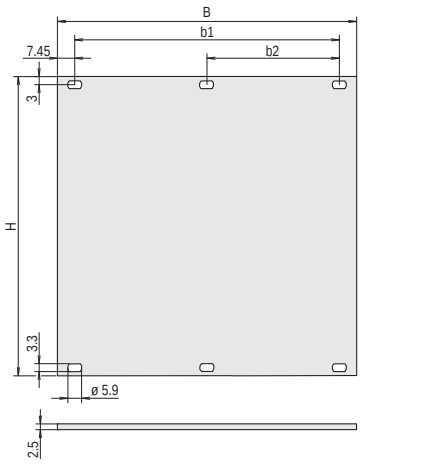

> 2 HP

- Front panel, Al, 2.5 mm
- Versions:
  - Al, anodised
  - Al, anodised, cut edges plain
  - Al, front anodised, rear iridescent green chromated

Note

- Other sizes and finishes available on request
- Please order fixing material separately, see chapter Assemply parts, page 7.107

Order Information

Height	H	Width	B	b1	b2	Qty 1)	Anodised, cut edges plain	Anodised	Front anodised, rear colorless chromated
U	mm	HP	mm	mm	mm		Part no.	Part no.	Part no.
1	39.5	84	426.4	411.5	203.2	1	–	–	20850-426
2	84.0	84	426.4	411.5	203.2	1	30818-271	30807-416	30847-461
3	128.4	2	9.8	–	–	1 (SPQ 5)[1)]	30810-433	30810-432	30847-470
3	128.4	3	14.9	–	–	1 (SPQ 5)[1)]	30818-272	30807-508	30847-471
3	128.4	4	20.0	–	–	1 (SPQ 5)[1)]	30818-273	30807-481	30838-043
3	128.4	5	25.0	–	–	1 (SPQ 5)[1)]	30818-274	30807-510	30838-044
3	128.4	6	30.1	–	–	1 (SPQ 5)[1)]	30818-275	30807-482	30838-045
3	128.4	7	35.2	–	–	1 (SPQ 5)[1)]	30818-276	30807-509	30838-046
3	128.4	8	40.3	25.4 [2)]	–	1 (SPQ 5)[1)]	30818-277	30807-484	30838-047
3	128.4	10	50.5	35.6	–	1 (SPQ 5)[1)]	30818-279	30807-483	30838-049
3	128.4	12	60.6	45.7	–	1 (SPQ 5)[1)]	30818-281	30807-485	30838-051
3	128.4	14	70.8	55.9	–	1 (SPQ 5)[1)]	30818-282	30807-501	30838-053
3	128.4	21	106.3	91.4	–	1 (SPQ 5)[1)]	30818-289	30807-487	30838-060
3	128.4	28	141.9	127.0	–	1 (SPQ 5)[1)]	30818-296	30807-496	30838-067
3	128.4	42	213.0	198.1	101.6 [2)]	1	30818-310	30807-494	30838-081
3	128.4	63	319.7	304.8	157.5	1	30818-331	30808-067	30838-102
3	128.4	84	426.4	411.5	203.2	1	30818-352	30807-506	30838-123
4	172.9	84	426.4	411.5	203.2	1	30818-434	30807-596	30847-465
6	261.8	2	9.8	–	–	1 (SPQ 5)[1)]	30818-747	30818-741	30847-472
6	261.8	4	20.0	–	–	1 (SPQ 5)[1)]	30818-518	30807-778	30838-124
6	261.8	5	25.0	–	–	1 (SPQ 5)[1)]	30818-519	30807-777	30838-125
6	261.8	6	30.1	–	–	1 (SPQ 5)[1)]	30818-520	30807-752	30838-126
6	261.8	7	35.2	–	–	1 (SPQ 5)[1)]	30818-521	–	30838-127
6	261.8	8	40.3	25.4 [2)]	–	1 (SPQ 5)[1)]	30818-522	30807-779	30838-128
6	261.8	10	50.5	35.6	–	1 (SPQ 5)[1)]	30818-524	30807-753	30838-130
6	261.8	12	60.6	45.7	–	1 (SPQ 5)[1)]	30818-526	30807-755	30838-132
6	261.8	14	70.8	55.9	–	1 (SPQ 5)[1)]	30818-528	30807-758	30838-134
6	261.8	16	80.9	66.0	–	1 (SPQ 5)[1)]	30818-530	30807-780	30838-136
6	261.8	21	106.3	91.4	–	1 (SPQ 5)[1)]	30818-535	30807-757	30838-141
6	261.8	28	141.9	127.0	–	1 (SPQ 5)[1)]	30818-542	30807-766	30838-148
6	261.8	42	213.0	198.1	101.6 [2)]	1	30818-556	30807-764	30838-162
6	261.8	63	319.7	304.8	157.5	1	30818-577	30807-771	30838-183
6	261.8	84	426.4	411.5	203.2	1	30818-598	30807-776	30838-204
9	395.1	84	426.4	411.5	203.2	1	–	–	30847-556

1) SPQ (standard pack quantity): Part number includes 1 piece, but delivery is exclusively made in standard pack quantity (SPQ); please order at least the SPQ quantity or a multiple

2) This dimension is only available for "front anodised, rear iridescent green chromated" version

- Please order fixing material (sleeves, collar screws) separately, see page 7.107

Front panels, shieldable

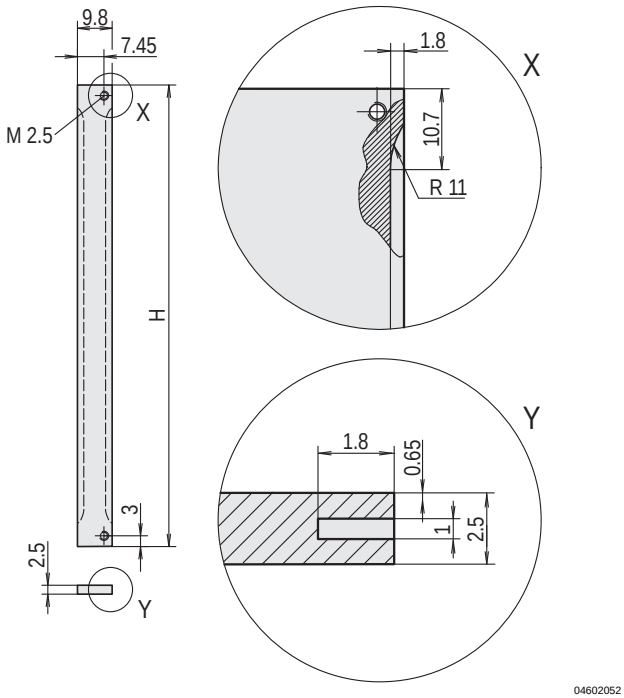

2 HP

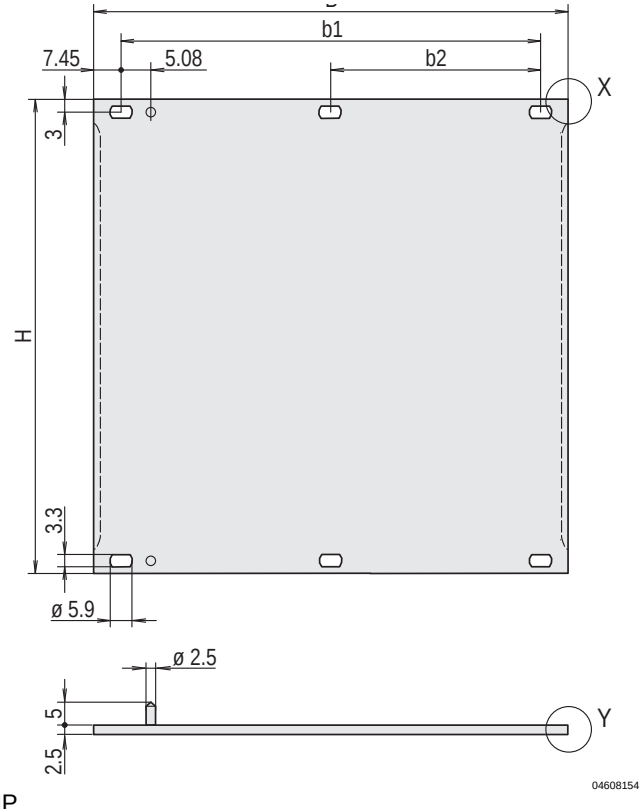

> 2 HP

- Front panel, Al, 2.5 mm, front anodised, rear iridescent green chromated, 2 alignment pins pressed-in, stainless steel
- Shielding with stainless steel EMC gasket

Order Information

Height H U	mm	Width HP	B mm	b1 mm	b2 mm	Align-ment pin	Qty	Part no.
2	84	84	426.4	411.5	203.2	–	1	30846-588
3	128.4	2	9.8	–	–	–	1 (SPQ 5)[1)]	30846-864
3	128.4	3	14.9	–	–	x	1 (SPQ 5)[1)]	20846-425
3	128.4	4	20	–	–	x	1 (SPQ 5)[1)]	20846-426
3	128.4	5	25	–	–	x	1 (SPQ 5)[1)]	20846-427
3	128.4	6	30.1	–	–	x	1 (SPQ 5)[1)]	20846-428
3	128.4	7	35.2	–	–	x	1 (SPQ 5)[1)]	20846-429
3	128.4	8	40.3	25.4	–	x	1 (SPQ 5)[1)]	20846-430
3	128.4	10	50.5	35.6	–	x	1 (SPQ 5)[1)]	20846-431
3	128.4	12	60.6	45.7	–	x	1 (SPQ 5)[1)]	20846-432
3	128.4	14	70.8	55.9	–	x	1 (SPQ 5)[1)]	20846-433
3	128.4	21	106.3	91.4	–	x	1 (SPQ 5)[1)]	20846-434
3	128.4	28	141.9	127	–	x	1 (SPQ 5)[1)]	20846-436
3	128.4	42	213	198.1	101.6	x	1	20846-437
3	128.4	63	319.7	304.8	157.5	x	1	20846-438
3	128.4	84	426.4	411.5	203.2	–	1	30846-676
4	172.9	84	426.4	411.5	203.2	–	1	30846-683
6	261.8	2	9.8	–	–	–	1 (SPQ 5)[1)]	30846-865
6	261.8	4	20	–	–	x	1 (SPQ 5)[1)]	20846-443
6	261.8	5	25	–	–	x	1 (SPQ 5)[1)]	20846-444
6	261.8	6	30.1	–	–	x	1 (SPQ 5)[1)]	20846-445
6	261.8	7	35.2	–	–	x	1 (SPQ 5)[1)]	20846-446
6	261.8	8	40.3	25.4	–	x	1 (SPQ 5)[1)]	20846-447
6	261.8	10	50.5	35.6	–	x	1 (SPQ 5)[1)]	20846-448
6	261.8	12	60.6	45.7	–	x	1 (SPQ 5)[1)]	20846-449
6	261.8	14	70.8	55.9	–	x	1 (SPQ 5)[1)]	20846-450
6	261.8	16	80.9	66	–	x	1 (SPQ 5)[1)]	20846-456
6	261.8	21	106.3	91.4	–	x	1 (SPQ 5)[1)]	20846-451
6	261.8	28	141.9	127	–	x	1 (SPQ 5)[1)]	20846-452
6	261.8	42	213	198.1	101.6	x	1	20846-453
6	261.8	63	319.7	304.8	157.5	x	1	20846-454
6	261.8	84	426.4	411.5	203.2	–	1	30846-771
9	395.1	84	426.4	411.5	203.2	–	1	30846-859

Delivery is exclusively made in Standard Pack Quantity (SPQ):
Please order at least 5 pieces or a multiple.
Pricing is per individual item.

Note

- Please order fixing material (sleeves, collar screws) separately, see page 7.107
- Please order stainless steel EMC gasket separately, see page 7.6

For further information www.schroff.biz/oneclick
oneClick search code = Part no.

Stainless steel EMC gasket

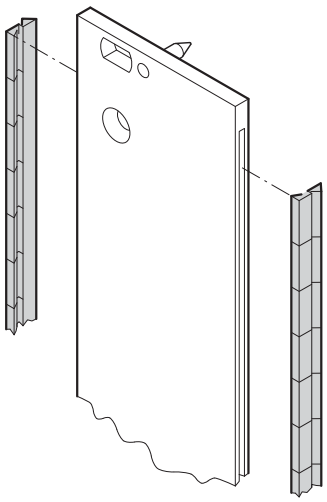

bga45760

Assembly tool

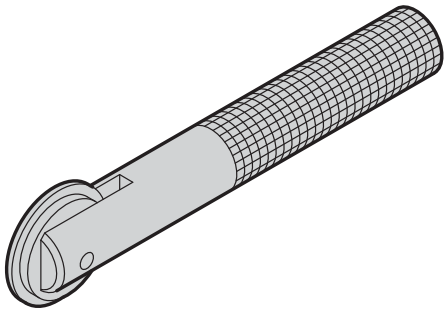

aza45937

- The stainless steel EMC gaskets are inserted into the lateral slots of the shieldable front panels (2 pieces per front panel)

Delivery comprises

Item	Qty	Description
1	10/100	EMC gasket (stainless steel)

Order Information

Height U	Height mm	Qty/PU	Part no.
2	52	10	21101-775
3	97	10	21101-705
3	97	100	21101-706
4	142	10	21101-713
4	142	100	21101-714
5	187	10	21101-777
5	187	100	21101-778
6	232	10	21101-707
6	232	100	21101-708
9	367	10	21101-709
9	367	100	21101-710
Assembly tool for EMC gasket (stainless steel), 1 piece			24560-270

Note

- Please order assembly tool separately

For further information www.schroff.biz/oneclick
oneClick search code = Part no.

Textile EMC gasket

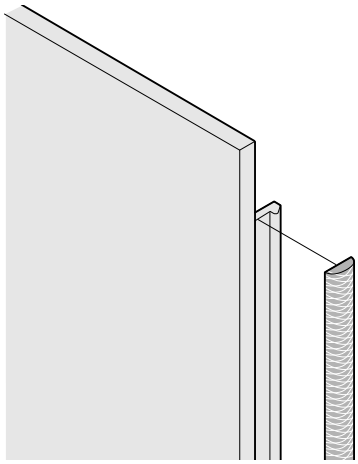

04602054

- The textile EMC gasket is glued laterally on the front panel, in the groove of the right-hand profile
- Temperature range -40 °C ... +70 °C

Delivery comprises ()

Item	Qty	Description
1	10/100	Textile EMC gasket, core: foam, sleeve: textile cladding with CuNi coating

Order Information

Height U	Height mm	Qty/PU	Part no.
2	52	10	21101-857
3	97	10	21101-853
3	97	100	21101-854
4	142	10	21101-858
5	187	10	21101-978
6	232	10	21101-855
6	232	100	21101-856
9	365	10	21101-859
9	365	100	21101-904

For further information www.schroff.biz/oneclick
oneClick search code = Part no.

Front panels, U profile, shieldable

2 HP

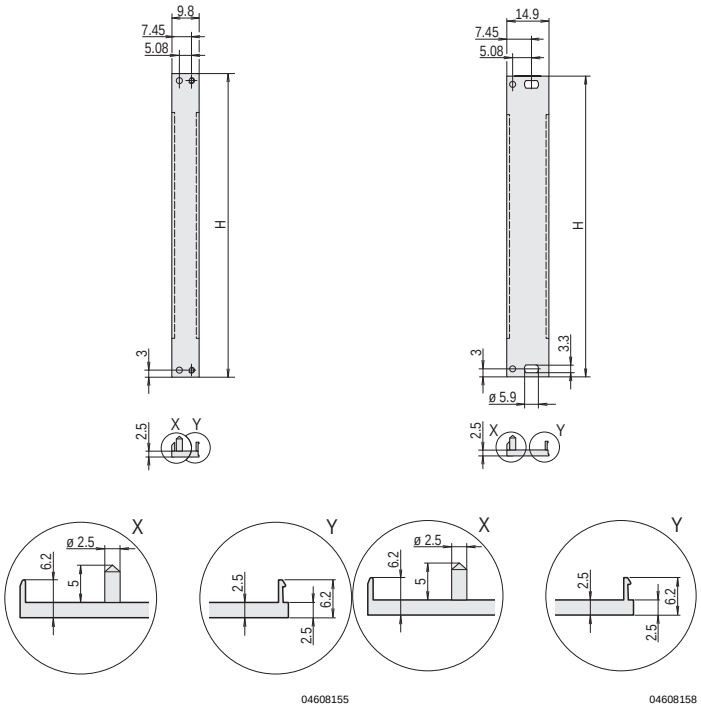

04608155

3 U

04608158

> 3 HP

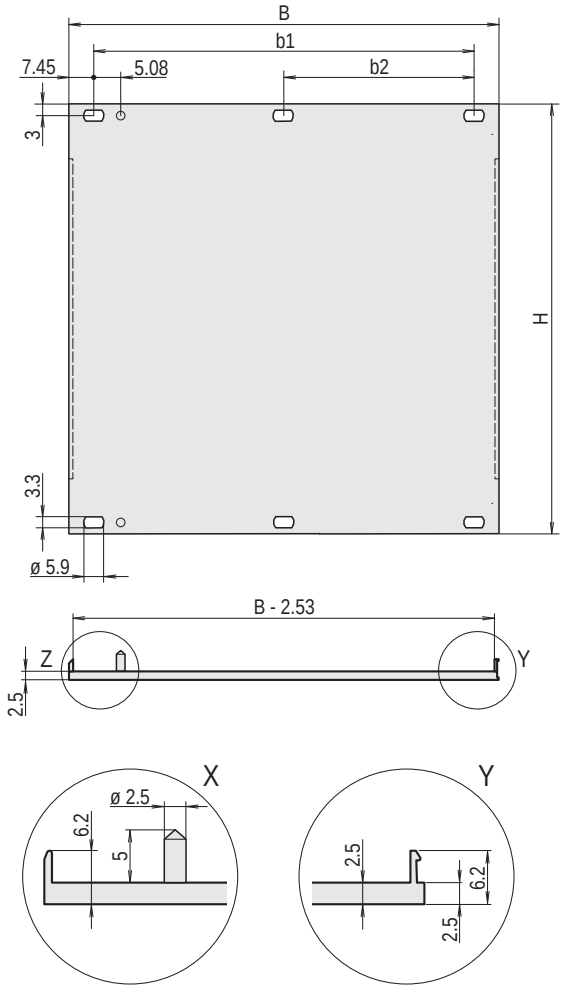

04608156

- High stability through U profile
- Front panel, U profile, Al, front anodised, rear conductive, 2 alignment pins pressed-in, stainless steel
- Differerences in the finish between 2 ... 12 HP and 14 ... 84 HP

Order Information

Height H U	mm	Width HP	B mm	b1 mm	b2 mm	Align-ment pin	Qty	Part no.
2	84	84	426.4	411.5	203.2	–	1 (SPQ 5)[1)]	20848-262
3	128.4	2	9.8	–	–	x	1 (SPQ 5)[1)]	30849-001
3	128.4	3	14.9	–	–	x	1 (SPQ 5)[1)]	30849-004
3	128.4	4	20	–	–	x	1 (SPQ 5)[1)]	30848-354
3	128.4	5	25	–	–	x	1 (SPQ 5)[1)]	30848-378
3	128.4	6	30.1	–	–	x	1 (SPQ 5)[1)]	30848-380
3	128.4	7	35.2	–	–	x	1 (SPQ 5)[1)]	30848-382
3	128.4	8	40.3	25.4	–	x	1 (SPQ 5)[1)]	30848-356
3	128.4	10	50.5	35.6	–	x	1 (SPQ 5)[1)]	30848-386
3	128.4	12	60.6	45.7	–	x	1 (SPQ 5)[1)]	30848-358
3	128.4	14	70.8	55.9	–	x	1 (SPQ 5)[1)]	20848-013
3	128.4	16	80.9	66	–	x	1 (SPQ 5)[1)]	20848-015
3	128.4	21	106.3	91.4	–	x	1 (SPQ 5)[1)]	20848-020
3	128.4	28	141.9	127	–	x	1 (SPQ 5)[1)]	20848-027
3	128.4	42	213	198.1	101.6	x	1	20848-047
3	128.4	63	319.7	304.8	157.5	x	1	20848-068
3	128.4	84	426.4	411.5	203.2	–	1	20848-097
4	172.9	84	426.4	411.5	203.2	–	1	20848-271
6	261.8	2	9.8	–	–	x	1 (SPQ 5)[1)]	30849-002
6	261.8	4	20	–	–	x	1 (SPQ 5)[1)]	30848-355
6	261.8	5	25	–	–	x	1 (SPQ 5)[1)]	30848-379
6	261.8	6	30.1	–	–	x	1 (SPQ 5)[1)]	30848-381
6	261.8	7	35.2	–	–	x	1 (SPQ 5)[1)]	30848-383
6	261.8	8	40.3	25.4	–	x	1 (SPQ 5)[1)]	30848-357
6	261.8	10	50.5	35.6	–	x	1 (SPQ 5)[1)]	30848-387
6	261.8	12	60.6	45.7	–	x	1 (SPQ 5)[1)]	30848-359
6	261.8	14	70.8	55.9	–	x	1 (SPQ 5)[1)]	20848-106
6	261.8	16	80.9	66	–	x	1 (SPQ 5)[1)]	20848-108
6	261.8	21	106.3	91.4	–	x	1 (SPQ 5)[1)]	20848-113
6	261.8	28	141.9	127	–	x	1 (SPQ 5)[1)]	20848-120
6	261.8	42	213	198.1	101.6	x	1	20848-139
6	261.8	63	319.7	304.8	157.5	x	1	20848-160
6	261.8	84	426.4	411.5	208.3	–	1	20848-189
9	395.1	84	426.4	411.5	203.2	–	1	20848-280

1) Delivery is exclusively made in Standard Pack Quantity (SPQ): Please order at least 5 pieces or a multiple.
Pricing is per individual item.

Note

- Differences in finish between 2 ... 12 HP and 14 ... 84 HP
  - 2 ... 12 HP: one-part U-profile
  - 14 ... 84 HP: multi-part U-profile (front panel with crimped profiles)
- Please order fixing material (sleeves, collar screws) separately, see page 7.107
- Please order textile EMC gasket separately, see page 7.6

Front panels, bottom-hinged



04295001

- Suitable for subracks (europacPRO) and cases (ratiopacPRO, propacPRO, compacPRO)
- Front panel can be unhinged at 135° (not ratiopacPRO) opening angle
- The useable width is not restricted
- Mounts on the horizontal rails
- 2 versions:
  – unshielded
  – shielded, U front panel with textile EMC gasket

Delivery comprises (kit)

Item	Qty		Description
	Unshielded	Shielded	
1	1	-	Front panel, hinged, Al, 2.5 mm, anodised, cut edges plain
1a	-	1	Front panel, U profile, hinged, Al, 2.5 mm, front anodised, rear iridescent green chromated
2	2	3	Hinge, Zn die-cast, nickel-plated
3	2	3	Sleeve, PA
4	2	3	Knurled screw M2.5 x 12.3, nickel-plated
5	-	1	EMC textile gasket, core: foam, sleeve: textile cladding with CuNi coating
6	1	1	Assembly kit

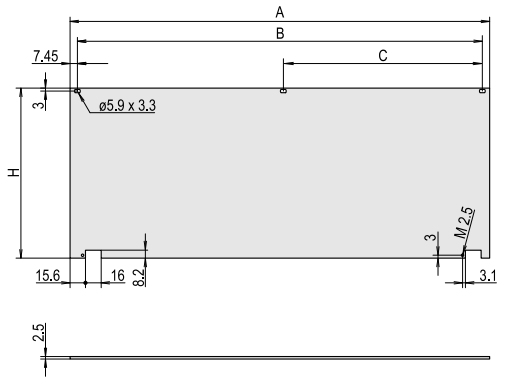

04602080

Unshielded

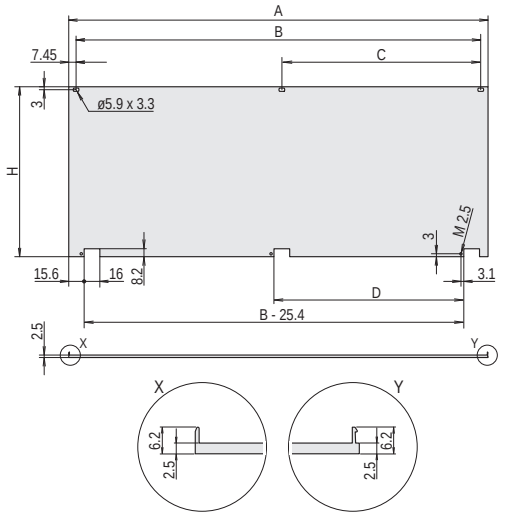

04602079

Shielded

Note

- Unshielded: Dimension C for 84 HP only

Order Information

Dimensions							Shielded	Unshielded
Height	Width	A	B	C	D	H	Part no.	Part no.
U	HP	mm	mm	mm	mm	mm		
3	28	141.9	127.0	–	–	128.4	20848-608	20838-280
3	42	213.0	198.1	101.6	86.4	128.4	20848-599	20838-271
3	63	319.7	304.8	157.5	137.2	128.4	20848-600	20838-272
3	84	426.4	411.5	208.3 [1)]	193.0	128.4	20848-601	20838-273
4	42	213.0	198.1	101.6	86.4	172.9	20848-605	20838-277
4	63	319.7	304.8	157.5	137.2	172.9	20848-606	20838-278
4	84	426.4	411.5	208.3 [1)]	193.0	172.9	20848-607	20838-279
6	28	141.9	127.0	–	–	261.8	20848-696	–
6	42	213.0	198.1	101.6	86.4	261.8	20848-602	20838-274
6	63	319.7	304.8	157.5	137.2	261.8	20848-603	20838-275
6	84	426.4	411.5	208.3 [1)]	193.0	261.8	20848-604	20838-276

1) Dimension with unshielded front panel

Part number in bold face type: ready for despatch within 2 working days
Part number in normal type: ready for despatch within 10 working days

Front panel, hinged, shielded



04295002

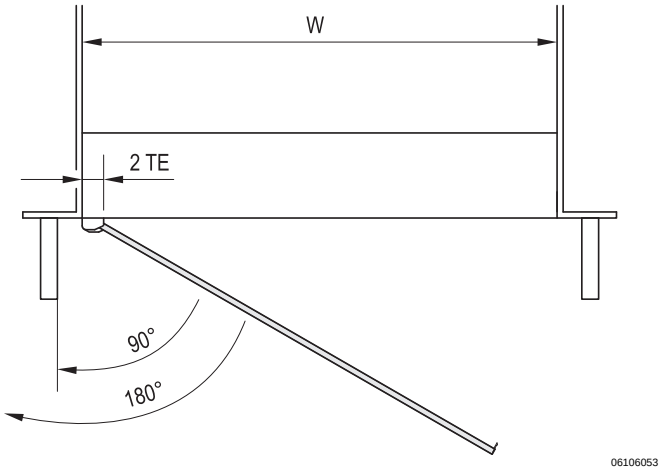

06106053

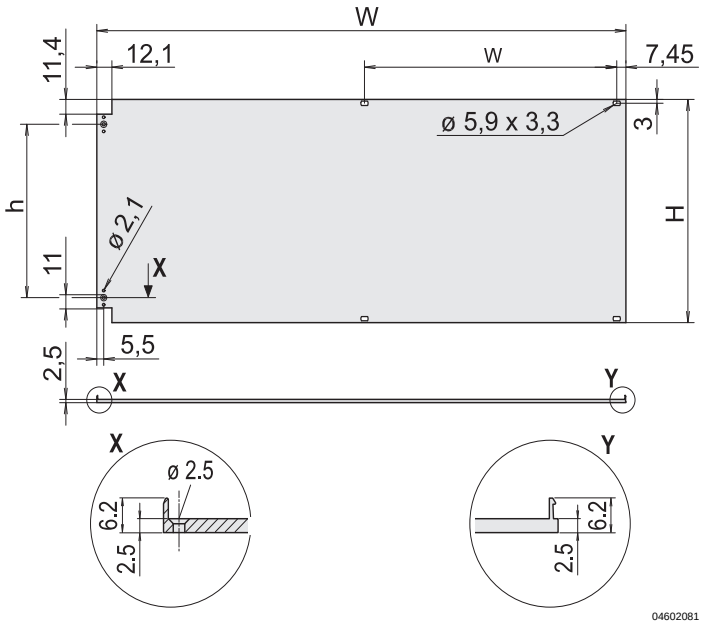

04602081

- Suitable for subracks (europacPRO) and cases (ratiopacPRO, propacPRO, compacPRO)
- Mounts on horizontal rails
- Front panel with textile EMC gasket
- Hinges can be fitted on left or right

Delivery comprises (kit)

Item	Qty	Description
1	1	Front panel, hinged, Al, 2.5 mm, front anodised, rear iridescent green chromated
2	2	Hinge, Zn die-cast, chrome-plated
3	1	Textile EMC gasket, core: foam, sleeve: textile cladding with CuNi coating
4	1	Assembly kit

Order Information

Height	H	h	W	w	Part no.
U	mm	mm	mm	mm	
3	128.4	89.9	426.4	203.2	20848-611
6	261.8	223.2	426.4	203.2	20848-617

For further information www.schroff.biz/oneclick
oneClick search code = Part no.

Front panels for D-Sub connectors

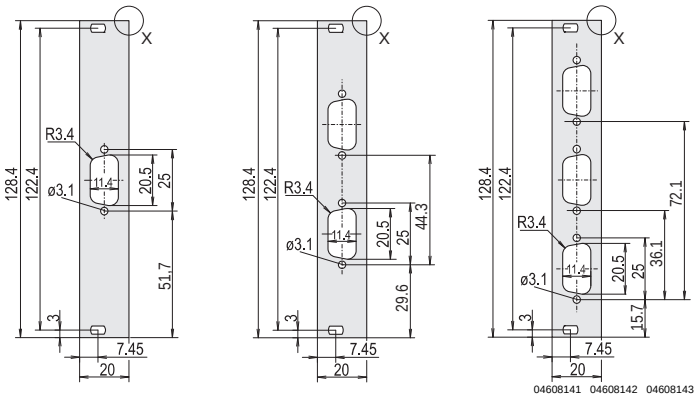

Cut-out 9-pin

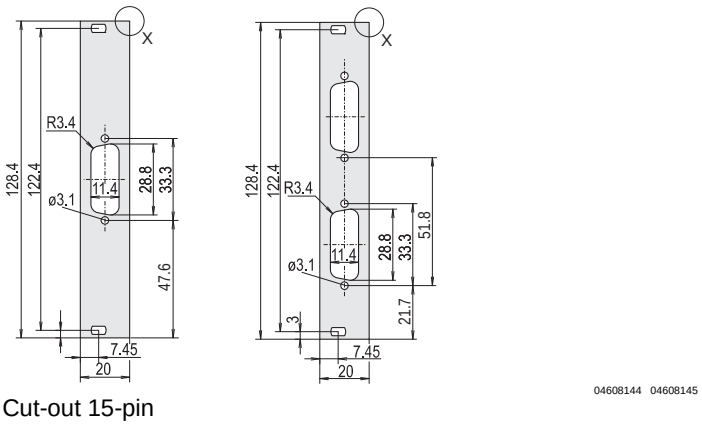

Cut-out 15-pin

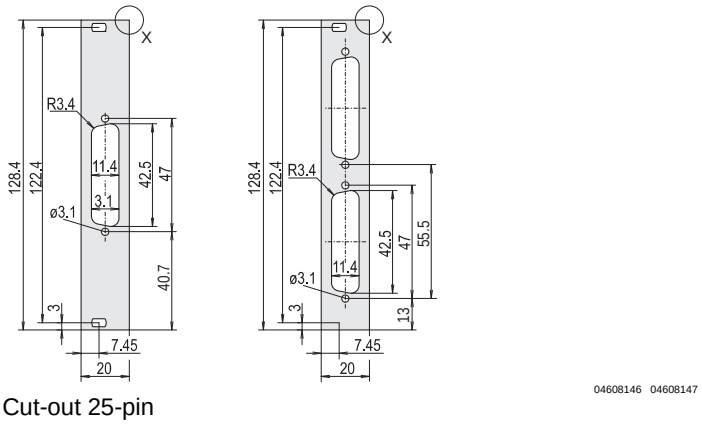

Cut-out 25-pin

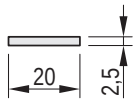

Unshielded

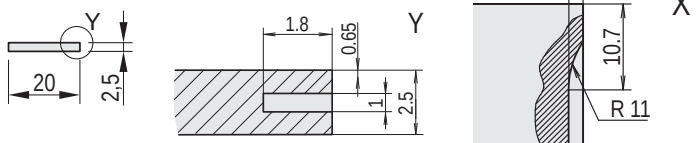

EMC gasket, stainless steel

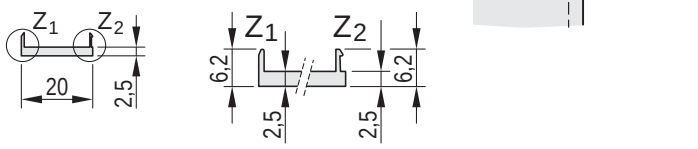

For textile EMC gasket

- 3 U/4 HP
- Aluminium, front anodised, rear irisdescent green chromated
- Shielding through: stainless steel EMC or textile EMC gasket (please order separately)

Delivery comprises

Item	Description
1a	Front panel, Al, 2.5 mm, front anodised, rear irisdescent green chromated
1b	Front panel, Al, 2.5 mm, front anodised, rear iridescent green chromated; for EMC stainless steel gasket
1c	Front panel, U profile, Al, 2.5 mm, front anodised, rear conductive; for EMC gasket (textile)

Order Information

Cut-out	Qty	Unshielded	For EMC gasket	
			Stainless steel	Textile
		Part no. 1a	Part no. 1b	Part no. 1c
1 × 9-polig	1 piece (SPQ 5)	30118-341	30118-348	30849-749
2 × 9-polig	1 piece (SPQ 5)	30118-344	30118-351	30849-750
3 × 9-polig	1 piece (SPQ 5)	30118-347	30118-354	30849-751
1 × 15-polig	1 piece (SPQ 5)	30118-342	30118-349	30849-752
2 × 15-polig	1 piece (SPQ 5)	30118-345	30118-352	30849-753
1 × 25-polig	1 piece (SPQ 5)	30118-343	30118-350	30849-754
2 × 25-polig	1 piece (SPQ 5)	30118-346	30118-353	30849-755

Delivery is exclusively made in Standard Pack Quantity (SPQ):
Please order at least 5 pieces or a multiple.
Pricing is per individual item.

Note

- Please order fixing material (sleeves, collar screws) separately, see page 7.107
- Please order stainless steel EMC gasket separately, see page 7.6
- Please order textile EMC gasket separately, see page 7.6

For further information www.schroff.biz/oneclick
oneClick search code = Part no.

Part number in bold face type: ready for despatch within 2 working days
Part number in normal type: ready for despatch within 10 working days

Front panels

Front panels for Coax connectors

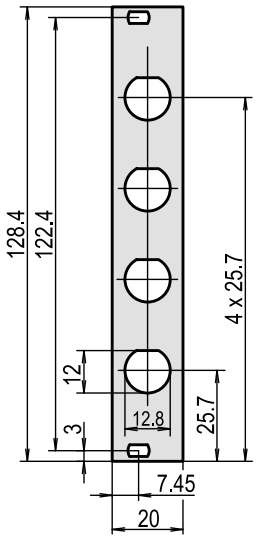

04602057

- 3 U/4 HP
- Aluminium, 2.5 mm, front anodised, rear irisdescent green chromated

Order Information

Description	Qty/PU	Part no.
Cut-out 4 x Coax, unshielded	1	30118-355

Note

- Please order fixing material (sleeves, collar screws) separately, see page 7.107

For further information www.schroff.biz/oneclick
oneClick search code = Part no.

Front panels 3 U with GND/earthing connection



02998001

- Earthed front panel (protection class 1)

Delivery comprises (items 1 – 3 assembled)

Item	Qty	Description
1	1	Front panel 3 U, Al, 2.5 mm, front anodised, rear iridescent green chromated with GND/earthing connection
2	4	Plastic sleeve, PA, grey
3	4	Collar screws, M2.5 x 11 and 12.3 Pozidrive, St, nickel-plated
4	1	GND/earthing kit, length of GND/earthing cable 320 mm

Order Information

Height U	Width HP	Qty	Part no.
3	7	1 piece (SPQ 5)	20119-159
3	14	1 piece (SPQ 5)	20119-160
3	21	1 piece (SPQ 5)	20119-161
3	28	1 piece (SPQ 5)	20119-162
3	42	1	20119-163

Delivery is exclusively made in Standard Pack Quantity (SPQ):
Please order at least 5 pieces or a multiple.
Pricing is per individual item.

Note

- Please order fixing material (sleeves, collar screws) separately, see page 7.107

For further information www.schroff.biz/oneclick
oneClick search code = Part no.

Front panels

Mezzanine front panels

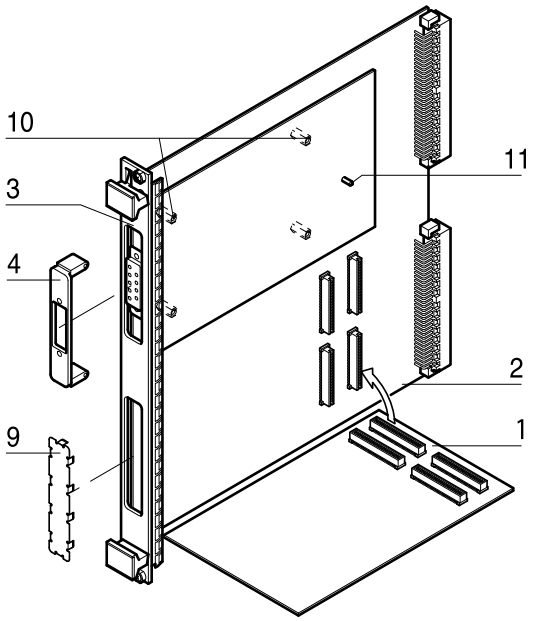

- Based on PCI 2.2 specification
  (PCI = **P**eripheral **C**omponent **I**nterface)
- In accordance with PMC mezzanine specification IEEE P 1386
- In accordance with PC-MIP mezzanine specification VITA-29

PMC mezzanine front panel with handle, shielded

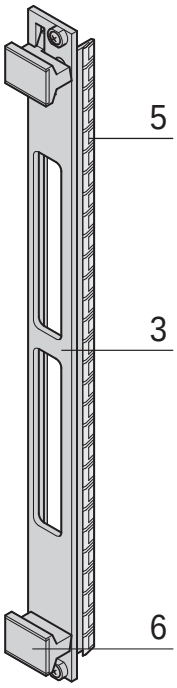

Item 3: front panel, item 5: EMC gasket, item 6: front handle

- PMC= **P**CI **M**ezzanine **C**ard
- For module size 194 x 74 mm2
- In accordance with specification IEEE P1386
  (CMC= **C**ommon **M**ezzanine **C**ard)
- 6 U/4 HP front panel with stainless steel EMC gasket and front handles

Delivery comprises (assembled)

Item	Qty	Description
3	1	PMC front panel, Al extrusion, 6 U, 4 HP, iridescent green chromated
5	1	EMC gasket (St, stainless)
6	2	Front handle

Order Information

Item	Description	Part no.
3+5+6	Front panel with 2 cut-outs	20897-950

For further information www.schroff.biz/oneclick
oneClick search code = Part no.

EMC cover for PMC mezzanine front panel cut-outs



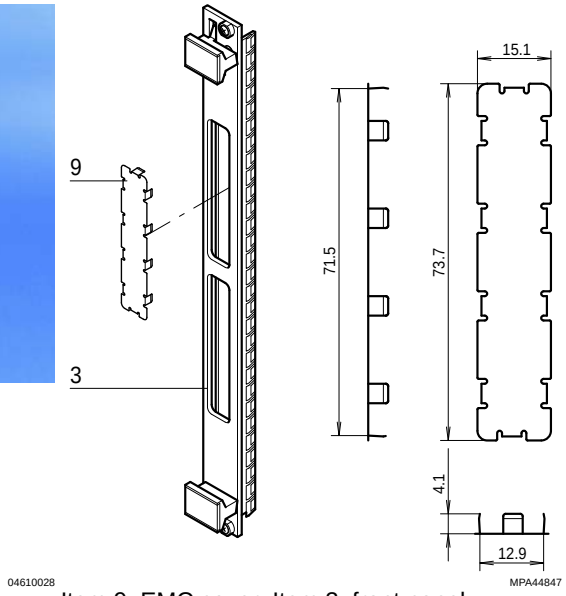

Item 9: EMC cover; Item 3: front panel

- EMC cover to close unused cut-outs in the PMC mezzanine front panels
- Material stainless steel, 0.2 mm
- Colour: black or bright

Order Information

Colour	Qty	Part no.
Black	1 piece (SPQ 10)	60835-024
Bright	1 piece (SPQ 10)	60835-022

Delivery is exclusively made in Standard Pack Quantity (SPQ): Please order at least 10 pieces or a multiple.
Pricing is per individual item.

For further information www.schroff.biz/oneclick
oneClick search code = Part no.

PMC mezzanine front panels

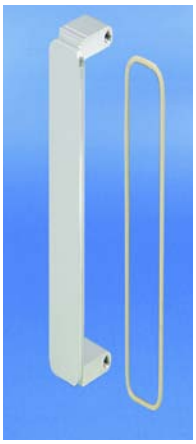

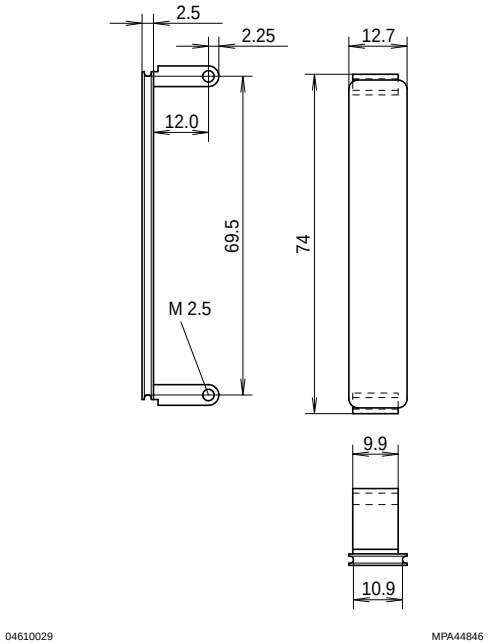

- Mezzanine front panel is fitted into PMC front panel cut-outs; EMC shielding with conductive O-ring
- Material:
  - Aluminium extrusion (anodised, contact surfaces conductive)
  - Zinc die-cast (untreated, black or chrome-plated, matt)

Delivery comprises (kit)

Item	Qty	Description
4	1	PMC mezzanine front panel, Zn die-cast or Al extrusion
7	1	EMC gasket (O-ring), Cho-Seal

Order Information

PMC mezzaninefront panel	Qty/PU	with EMC gasket	without EMC gasket
Material		**Part no.**	**Part no.**
Al extrusion, anodised, contact surfaces conductive	1	20835-598	–
Al extrusion, anodised, contact surfaces conductive	10	20835-889	20835-899
Zn die-cast, untreated	1	20835-890	–
Zn die-cast, untreated	10	20835-893	20835-896
Zinc die-cast, black, chromated	1	20835-922	–
Zinc die-cast, black, chromated	10	20835-924	20835-931
Zinc die-cast, chrome-plated, matt	1	20835-923	–
Zinc die-cast, chrome-plated, matt	10	20835-928	20835-929
Cheesehead screw M2.5 × 5 mm, PU 100 pieces			21100-624
EMC gasket O-ring, 1 piece (Standard Pack Quantity 10 pieces)			60835-021

For further information www.schroff.biz/oneclick
oneClick search code = Part no.

Spacer to mount PMC mezzanine boards

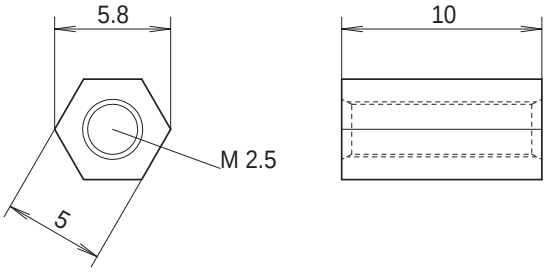

MPA44850

Order Information

Description	Item	Material	Qty	Part no.
Spacer	10	St, zinc-plated	1 piece (SPQ 10)	60897-278

Delivery is exclusively made in Standard Pack Quantity (SPQ):
Please order at least 10 pieces or a multiple.
Pricing is per individual item.

For further information www.schroff.biz/oneclick
oneClick search code = Part no.

Voltage keying/coding pin for PMC mezzanine boards

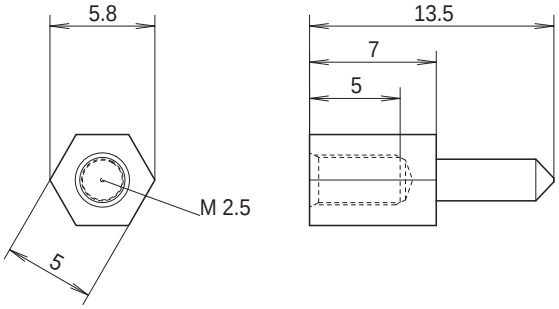

MPZU6325

- To prevent accidental damage when fitting mezzanine boards, keying/coding pins are bolted to the VMEbus boards to distinguish between 3.3 V and 5 V operation. The mezzanine boards have a hole drilled in the appropriate position. The keying/coding pin thus ensures that only mezzanine boards with the same operating voltage can be inserted. For double-height euroboards 2 pieces are required.

Order Information

Description	Item	Material	Qty	Part no.
Keying/ coding pin 5 V/3.3 V	11	St, zinc-plated	1 piece (SPQ 10)	60827-026

Delivery is exclusively made in Standard Pack Quantity (SPQ):
Please order at least 10 pieces or a multiple.
Pricing is per individual item.

For further information www.schroff.biz/oneclick
oneClick search code = Part no.

Front panels

Overview 0
Cabinets 1
Wall mounted cases 2
Accessories for cabinets and wall mounted cases 3
Climate control 4
Desk-top cases 5
Subracks/ 19" chassis . . . 6
Front panels, plug-in units . . 7
Systems 8
Power supply units 9
Backplanes . . 10
Connectors, front panel component system 11
Appendix 12

Plug-in units



04612001

Plug-in units as kits or from individual parts

- **Handles in different designs for various applications**
- **Inserter/extractor handles for forces up to 1500 N**
- **Upgradable EMC shielding**

Standards

- IEC 60297-3-101 / IEEE 1101.1/11
  IEC 60297-3-102 / IEEE 1101.10
  IEC 60297-3-103
  IEC 1296



30407004

ServicePLUS

e.g. individual configuration and assembly

e.g. modifications (special colours or sizes)

e.g. custom solutions with modification to the plug-in units

www.frontpanelexpress.eu

Downloads and further important information can be found on the Internet under www.schroff.biz

Handles for plug-in units

		Kit	Individual components
		Page	Page
 04603002	**For CompactPCI and VME64x applications** Inserter/extractor handle, type IEL/IET, allows keying/coding and insertion/extraction forces up to 700 N per pair	7.18	7.19
 04605005	**For VPX, VXS, CompactPCI and VME64x applications** Inserter/extractor handle, type XL, allows keying/coding and insertion/extraction forces up to 1500 N per pair	–	7.29
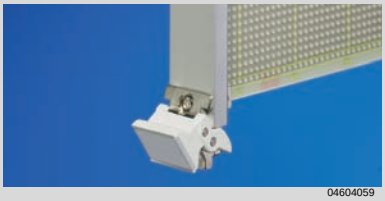 04604059	**For e.g. VMEbus applications** Trapeziform extractor handle, type 2	7.31	7.33
 04692008	**For e.g. VMEbus applications** Trapeziform extractor handle, type 1	7.38	7.40
 04692011	**For Multibus® II applications** Extractor handle, multibus type II, IEC 60297	–	7.44
 04692008	**For plug-in units in accordance with IEC 60297** Extractor handle in key form 1	–	7.46
 04692010	**For plug-in units in accordance with IEC 60297** Extractor handle in key form 2	–	7.49
 04692003	**For plug-in units in accordance with IEC 60297** Static handle	7.52	7.54
 04692004	**Accessories for plug-in units** Mechanical protection for static trapeziform handle and fixing materials kit	7.62	–

Overview 7.17
Plug-in units with injector and extractor handles
For CompactPCI and VME64x applications ... 7.18
For VPX, VXS, CompactPCI and VME64x applications ... 7.29
For e.g. VMEbus applications type 2 ..... 7.31
For e.g. VMEbus applications type 1 ..... 7.38
For Multibus® II applications 7.44
For plug-in units in accordance with IEC 60297 .. 7.46
For plug-in units in accordance with IEC 60297 .. 7.49
For plug-in units in accordance with IEC 60297 .. 7.52
Accessories for plug-in units 7.60
PCB cover 7.62

Kits

Plug-in units with IEL inserter/extractor handle for CompactPCI/VME64x applications

3 U

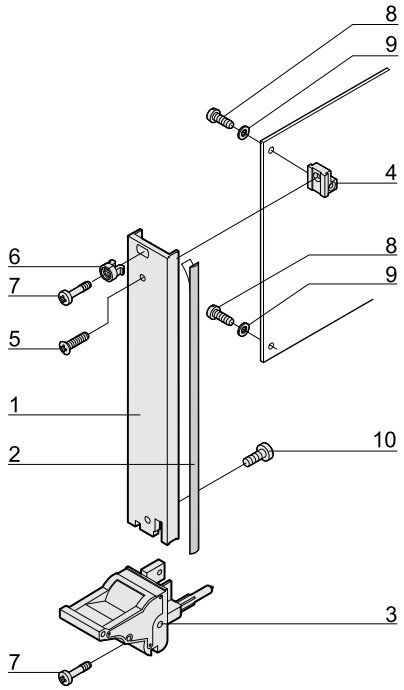

04602073

6 U

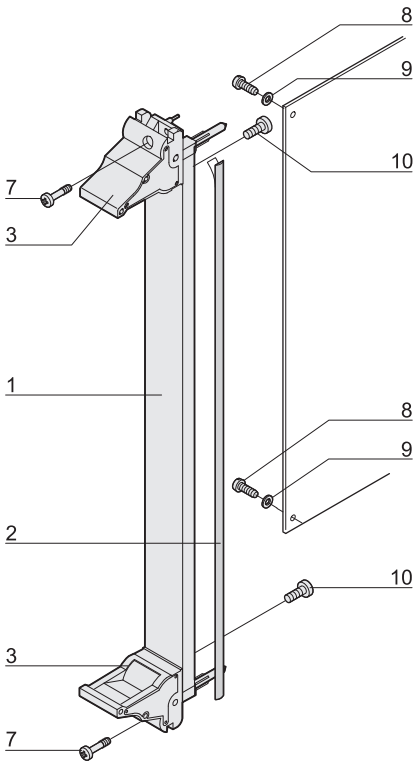

04602074

- In accordance with IEEE 1101.10 and IEC 60297-3-102
- Codable to IEC 60297-3-103/ IEEE 1101.10
- Front panel shielded
- Suitable for insertion and extraction forces up to 700 N (per pair)
- Suitable for fitting microswitches

Delivery comprises (kit)

Item	Qty 3 U <8HP	Qty 3 U ≥8HP	Qty 6 U <8HP	Qty 6 U ≥8HP	Description
1	1	1	1	1	Front panel (U profile), Al, front anodised, rear conductive
2	1	1	1	1	EMC sealing (textile), core: foam, sleeve: textile cladding, CuNi coated
3	1	1	2	2	Handle with integrated alignment pin for perforated strips and guide rails, lever: plastic, PC, black, RAL 9005 key: plastic, PC, light grey, RAL 7035
4	1	1	-	-	Board support, die-cast zinc
5	1	1	-	-	Raised Pozidrive countersunk screw M2.5 × 8, St, nickel-plated
6	1	3	-	2	Sleeve, PA, grey
7	2	4	2	4	Pozidrive collar screw, M2.5 × 12.3, St, nickel-plated
8	2	2	2	2	Panhead screw with Torx/slot, M2.5 × 6, St, zinc-plated, self-locking
9	2	2	2	2	Washer A2.7, DIN 125, St, nickel-plated
10	1	1	2	2	Panhead screw with Torx, M2.5 × 7, St, nickel-plated

Order Information

Width HP	Part no. Rear I/O	Part no. Front assembly
3 U Height		
4	20848-751	20848-585
6	-	20848-587
8	20848-752	20848-589
10	-	20848-590
12	-	20848-591
6 U Height		
4	-	20848-592
6	-	20848-594
8	-	20848-596
10	-	20848-597
12	-	20848-598
Accessories		
Microswitch for handles, CompactPCI/VME64x application PU 10 pieces		20817-606

- Dimension drawing of front profile see page 7.25
- Description of microswitch see page 7.29

Part number in bold face type: ready for despatch within 2 working days
Part number in normal type: ready for despatch within 10 working days

Order Information

		Front panel, U profile, shieldable			Textile EMC gasket		Front panel, flat, unshielded, front mounting
		Front mounting	Front mounting, PCB fixing with 0.1" offset	Rear I/O mounting			
		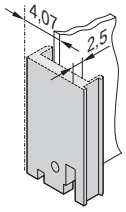 04608060	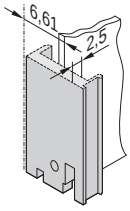 04608062	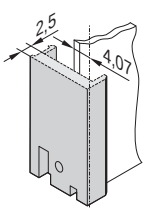 04608061	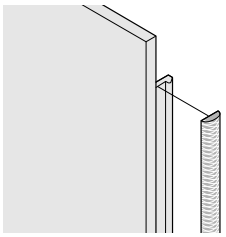 BGA45760		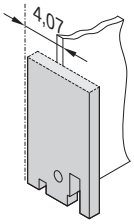 04608063
		Al extrusion, 2.5 mm, front anodised, rear conductive; alignment pin pressed-in (3 U only), stainless steel; manufacturing process causes various surface structures to appear between 4 to 12 HP and 14 to 16 HP			always fixed laterally on the front panel, in the groove of the profile, textile gasket, core: foam, sleeve: textile cladding with CuNi coating, UL 94 V-0, temperature range -40 ... 70 °C		front panel, Al, 2.5 mm, front anodised, rear irisdescent green chromated
	Width HP	1 piece (SPQ 5)[1]	1 piece (SPQ 5)[1]	1 piece (SPQ 5)[1]	PU 10 pieces	PU 100 pieces	1 piece (SPQ 5)[1]
		3 U Height					
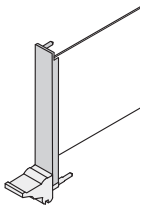 04608067	4	30848-312	30848-426	30848-867	21101-853	21101-854	30848-327
	5	30848-300	30848-427	–			30848-328
	6	30848-313	30848-428	–			30848-329
	7	30848-301	30848-429	–			30848-330
	8	30848-314	30848-430	30848-869			30848-331
	9	20848-227	–	–			–
	10	30848-315	30848-431	–			30848-333
	11	20848-228	–	–			–
	12	30848-316	30848-432	30848-985			30848-335
	14	20848-230	–	–			–
	16	20848-232	–	–			–
		6 U Height					
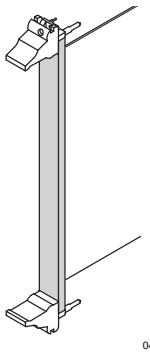 04608066	4	30848-317	30848-317	30848-317	21101-855	21101-856	30848-336
	5	30848-304	30848-304	30848-304			30848-337
	6	30848-318	30848-318	30848-318			30848-338
	7	30848-305	30848-305	30848-305			30848-339
	8	30848-319	30848-319	30848-319			30848-340
	9	20848-243	20848-243	20848-243			–
	10	30848-320	30848-320	30848-320			30848-342
	11	20848-244	20848-244	20848-244			–
	12	30848-321	30848-321	30848-321			30848-344
	14	20848-246	20848-246	20848-246			–
	16	20848-248	20848-248	20848-248			–
Fixing material see page		7.22	7.22	7.22			7.22
Dimensions see page		7.25	7.25	7.24			7.26

1) SPQ (standard pack quantity): Part number includes 1 piece, but delivery is exclusively made in standard pack quantity (SPQ); please order at least the SPQ quantity or a multiple

Part no. includes one packing unit (PU); delivery is exclusively made in PU

Individual components — Inserter/extractor handle, type IEL

Order Information

	Inserter/extractor handle, type IEL, board fixing without offset				Inserter/extractor handle, type IEL, board fixing with 0.1" offset			
	lever: light grey, RAL 7035 key: black, RAL 9005		lever: black, RAL 9005 key: light grey, RAL 7035		lever: light grey, RAL 7035 key: black, RAL 9005		lever: black, RAL 9005 key: light grey, RAL 7035	
	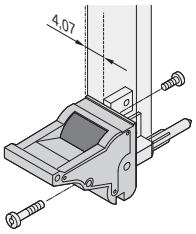 04608050		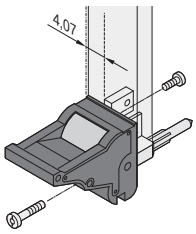 04608052		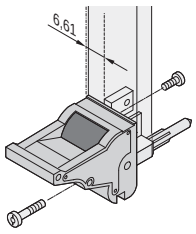 04608051		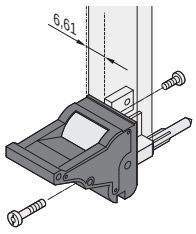 04808074	
	in accordance with IEEE 1101.10 and IEC 60297-3-102, with locking, suitable for insertion and extraction forces up to 700 N (per pair), suitable for fitting of microswitches; block die-cast zinc, nickel-plated, with integrated alignment pin for perforated strip, codable to IEEE 1101.10 and IEC 60297-3-103, lever/key UL 94 V-0, slotted Pozidrive collar screw, M2.5 x 12.3, St, nickel-plated, panhead screw with Torx, M2.5 x 7, St, nickel-plated				in accordance with IEEE 1101.10 and IEC 60297-3-102, with locking, suitable for insertion and extraction forces up to 700 N (per pair), suitable for fitting of microswitches; 0.1" offset is used for PSUs with SMD Plus, block die-cast zinc, nickel plated; with integrated alignment pin for perforated strip, codable to IEEE 1101.10 and IEC 60297-3-103, lever/key UL 94 V-0, slotted Pozidrive collar screw, M2.5 x 12.3, St, nickel-plated, panhead screw with Torx, M2.5 x 7, St, nickel-plated			
Assembly	**PU 10 pieces**	**PU 100 pieces**	**PU 10 pieces**	**PU 100 pieces**	**PU 10 pieces**	**PU 100 pieces**	**PU 10 pieces**	**PU 100 pieces**
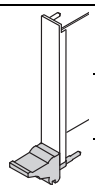 04608071	**3 U Height** bottom							
Front side	20817-620	20817-621	20817-612	20817-613	20817-690	20817-691	20817-682	20817-683
Rear I/O	20817-622	20817-623	20817-614	20817-615	–	–	–	–
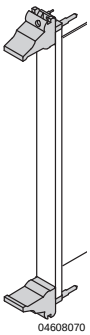 04608070	**6 U Height** top							
Front side	20817-622	20817-623	20817-614	20817-615	20817-692	20817-693	20817-684	20817-685
Rear I/O	20817-620	20817-621	20817-612	20817-613	–	–	–	–
	bottom							
Front side	20817-620	20817-621	20817-612	20817-613	20817-690	20817-691	20817-682	20817-683
Rear I/O	20817-622	20817-623	20817-614	20817-615	–	–	–	–
Dimensions see page	7.27				7.27			

Part number in bold face type: ready for despatch within 2 working days
Part number in normal type: ready for despatch within 10 working days

Order Information

	Inserter/extractor handle, type IET, board fixing without offset				Inserter/extractor handle, type IET, board fixing with 0.1" offset			
	lever: light grey, RAL 7035 key: black, RAL 9005		lever: black, RAL 9005 key: light grey, RAL 7035		lever: light grey, RAL 7035 key: black, RAL 9005		lever: black, RAL 9005 key: light grey, RAL 7035	
	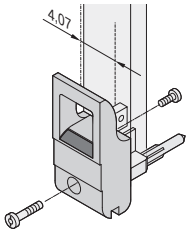 04608054		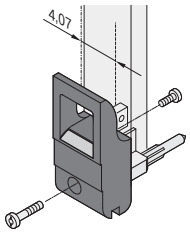 04608056		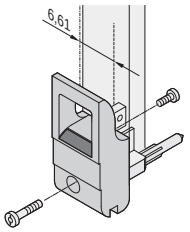 04608055		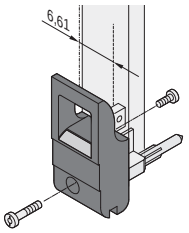 04808074	
	in accordance with IEEE 1101.10 and IEC 60297-3-102, with locking, suitable for insertion and extraction forces up to 700 N (per pair), suitable for fitting of microswitches; block die-cast zinc, nickel-plated, with integrated alignment pin for perforated strip, codable to IEEE 1101.10 and IEC 60297-3-103, lever/key UL 94 V-0, Slotted Pozidrive collar screw, M2.5 x 12.3, St, nickel-plated, panhead screw with Torx, M2.5 x 7, St, nickel-plated				in accordance with IEEE 1101.10 and IEC 60297-3-102, with locking, suitable for insertion and extraction forces up to 700 N (per pair), suitable for fitting of microswitches; 0.1" offset is used for PSUs with SMD Plus: block die-cast zinc, nickel plated; with integrated alignment pin for perforated strip, codable to IEEE 1101.10 and IEC 60297-3-103, lever/key UL 94 V-0, slotted Pozidrive collar screw, M2.5 x 12.3, St, nickel-plated, panhead screw with Torx, M2.5 x 7, St, nickel-plated			
Assembly	**PU 10 pieces**	**PU 100 pieces**	**PU 10 pieces**	**PU 100 pieces**	**PU 10 pieces**	**PU 100 pieces**	**PU 10 pieces**	**PU 100 pieces**
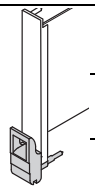 04608073	**3 U Height** bottom							
Front side	20817-660	20817-661	20817-652	20817-653	20817-714	20817-715	20817-706	20817-707
Rear I/O	20817-662	20817-663	20817-654	20817-655	–	–	–	–
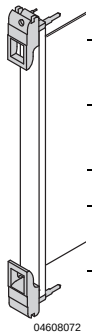 04608072	**6 U Height** top							
Front side	20817-662	20817-663	20817-654	20817-655	20817-716	20817-717	20817-708	20817-709
Rear I/O	20817-660	20817-661	20817-652	20817-653	–	–	–	–
	bottom							
Front side	20817-660	20817-661	20817-652	20817-653	20817-714	20817-715	20817-706	20817-707
Rear I/O	20817-662	20817-663	20817-654	20817-655	–	–	–	–
Fixing material see page	7.22				7.22			
Dimensions see page	7.28				7.28			

Individual components — inserter/extractor handles, type IEL/IET, fixing material

Order Information

3 U

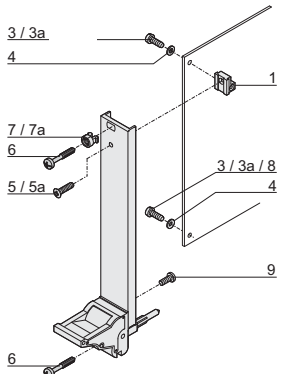

04609050

6 U

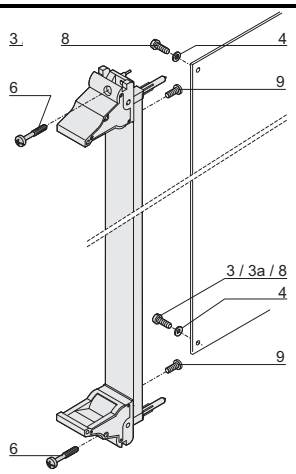

04609051

Fixing material	Item	3 U	Required quantity 3 U < 8 HP	3 U ≥ 8 HP	6 U < 8 HP	6 U ≥ 8 HP	Qty/PU	Part no.
Printed board bracket Zn die-cast	1	06707050	1	1	–	–	1 piece (SPG 10)[1)]	60807-181
Pozidrive panhead screw M2.5 × 6, St, nickel-plated , not for 0.1" offset	3	AZA45177	2	2	2	2	100	21101-219
Slotted panhead screw with Torx 8 M2.5 × 6, St, zinc-plated, self-securing thread not for 0.1" offset	3a	aza45940	2	2	2	2	100	24560-159
Washer 2.7, DIN 125, St, nickel-plated	4	AZA46586	2	2	2	2	100	21100-721
Raised Pozidrive countersunk panhead screw M2.5 × 8, St, nickel-plated	5	06702056	1	1	–	–	100	21100-429
Raised countersunk panhead screw with Torx 8 M2.5 × 8, St, nickel-plated	5a	06708050	1	1	–	–	100	24560-164
Pozidrive/slotted collar screw M2.5 × 12.3, St, nickel-plated AZA46586	6	AZA46586	1	3	–	2	100	21101-101
Plastic sleeve, for form hole 5.9 x 3.3 PA, UL 90 V-2, grey	7	aza45933	1	3	–	2	100	21100-464
Metal sleeve, for form hole 5.9 x 3.3, press-in Stainless steal	7a	aza45934	1	3	–	2	100	21100-662
Pozidrive panhead screw for IEL/IET handle with 0.1" offset M2.5 × 10, nickel-plated steel	8	AZA45177	2	2	2	2	100	21101-220
Torx panhead screw M2.5 × 7, St, nickel-plated, Torx 8,	9	aza45940	1	1	2	2	100	24560-147

1) SPQ (standard pack quantity): Part number includes 1 piece, but delivery is exclusively made in standard pack quantity (SPQ); please order at least the SPQ quantity or a multiple

Order Information

Microswitch	Keying/coding	Label strips	Label strips	
with cable and plug	in accordance with IEC 60297-3-103	19 x 9.5 mm	19 x 9.5 mm	19 x 4.8 mm
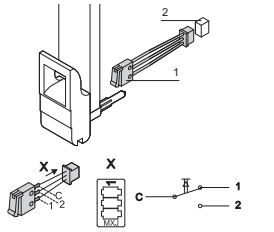 bga46314 bga46315	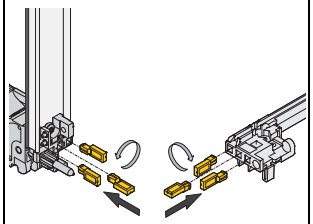 04612052	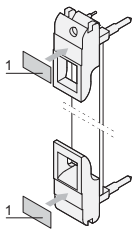 04808074	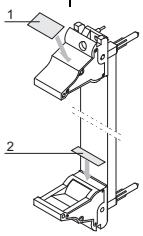 04808074	
Molex connector housing 51021-0300, Molex crimp contact 50058-8000 and fixing clip (item 3), plastic, PC, UL 94 V-0, max. switched current 50 mA, operating range -25 °C to +70 °C, mech. life ≥ 20,000 switching cycles, electr. life ≥ 20,000 switching cycles; suitable mating connectors (item 2) e.g. Molex 53261-0319, 53048-0310, 53047-0310, 53398-0319, 51047-0300 not included in scope of delivery	The keying/coding pegs prevent plug-in units to be mounted in wrong slots. They are inserted in the chambers of the codable card guides as well as in the insertion/ extraction handles IEL or IET (4 possible positions), resulting in 64 codings per card guide; when coding the upper and lower card guide, 4096 codings will result; guide rails for coding see page 6.38	Polyester, self-adhesive,white, 1 sheet 210 pieces (Item 1)	Polyester, self-adhesive, white, 1 sheet 210 pieces (item 1)	Polyester, self-adhesive, white, 1 sheet 320 pieces (item 2)
PU 10 pieces	**PU 100 pieces**	**PU 210 pieces**	**PU 210 pieces**	**PU 320 pieces**
3 U Height bottom				
20817-606	20817-501	60817-340	60817-340	60817-341
6 U Height top				
20817-606	20817-501	60817-340	60817-340	60817-341
bottom				
20817-606	20817-501	60817-340	60817-340	60817-341

Dimensions — Front panels, U-profiles, inserter/extractor handles, type IEL/IET, rear I/O, shieldable

PCB fixing without offset

3 U

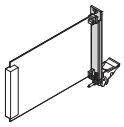

04608068

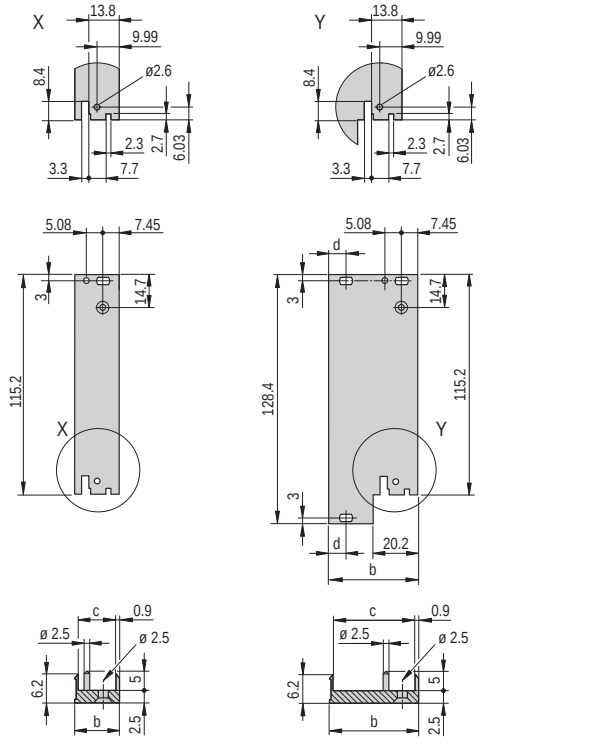

04608069

4 HP ≥5 HP

6 U

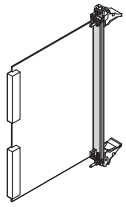

04608076

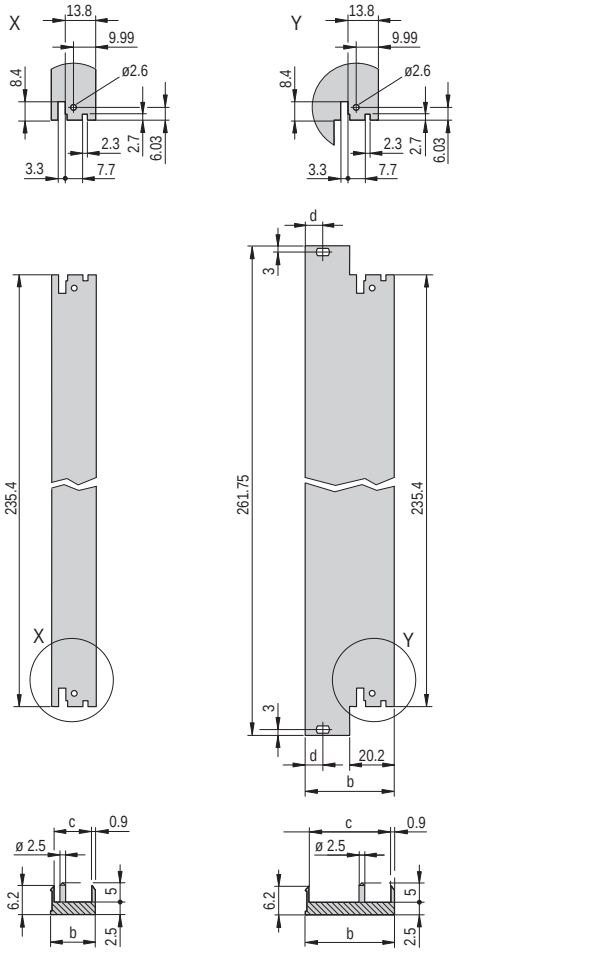

04608075

4 HP ≥5 HP

Dimensions table

Width	b	c	d
HP	mm	mm	mm
4	19.98	17.45	–
5	25.06	22.53	–
6	30.14	27.61	–
7	35.22	32.69	–
8	40.30	37.77	7.45
9	45.38	42.85	7.45
10	50.46	47.93	7.45
11	55.54	53.01	7.45
12	60.62	58.09	7.45
14	70.78	68.25	7.45
16	80.94	78.41	7.45

Part number in bold face type: ready for despatch within 2 working days
Part number in normal type: ready for despatch within 10 working days

Dimensions — Front panels, U-profiles, inserter/extractor handles, type IEL, IET, shieldable

PCB fixing without offset / with 0.1" offset

3 U

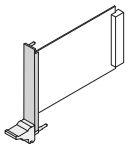

04608067

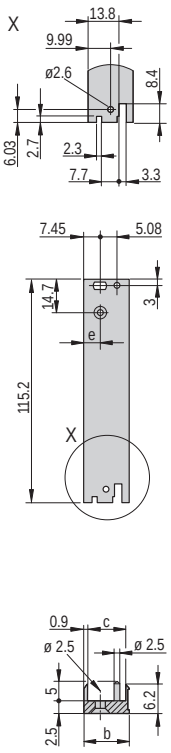

4 HP ≥5 HP

04608064

6 U

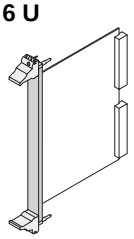

04608066

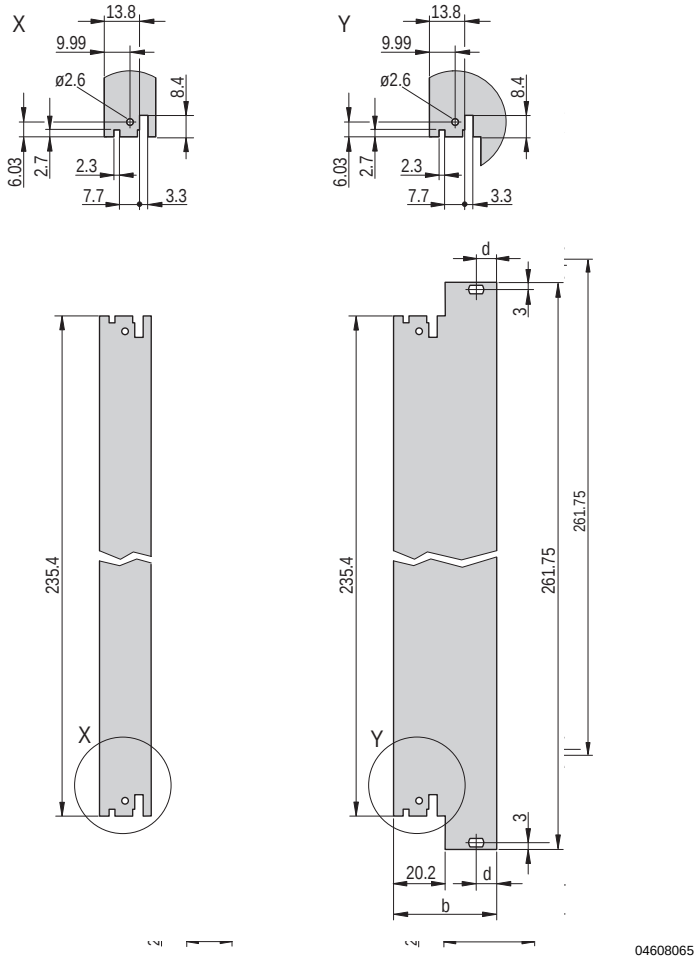

4 HP ≥5 HP

04608065

Dimensions table

Width HP	b mm	c mm	d mm	without offset e mm	with 0.1" offset e mm
4	19.98	17.45	–	7.45	9.99
5	25.06	22.53	–	7.45	9.99
6	30.14	27.61	–	7.45	9.99
7	35.22	32.69	–	7.45	9.99
8	40.30	37.77	7.45	7.45	9.99
9	45.38	42.85	7.45	7.45	9.99
10	50.46	47.93	7.45	7.45	9.99
11	55.54	53.01	7.45	7.45	9.99
12	60.62	58.09	7.45	7.45	9.99
14	70.78	68.25	7.45	7.45	9.99
16	80.94	78.41	7.45	7.45	9.99

Dimensions Front panels, inserter/extractor handles, type IEL/IET, unshielded

PCB fixing without offset

3 U

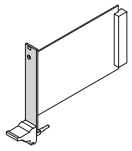

04608080

6 U

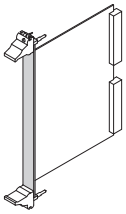

04608079

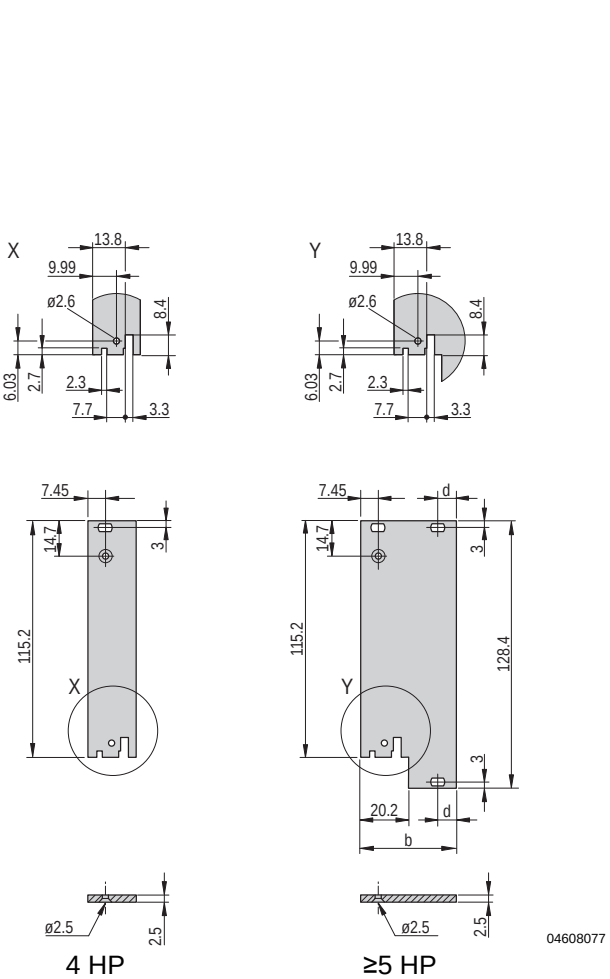

04608077

4 HP

≥5 HP

04608078

4 HP

≥5 HP

Dimensions table

Width HP	b mm	d mm
4	19.98	–
5	25.06	–
6	30.14	–
7	35.22	–
8	40.30	7.45
9	45.38	7.45
10	50.46	7.45
11	55.54	7.45
12	60.62	7.45
14	70.78	7.45
16	80.94	7.45

Part number in bold face type: ready for despatch within 2 working days
Part number in normal type: ready for despatch within 10 working days

Dimensions Inserter/extractor handle, type IEL

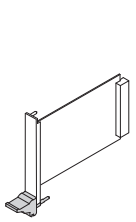

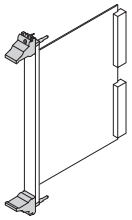

04608071 04608070

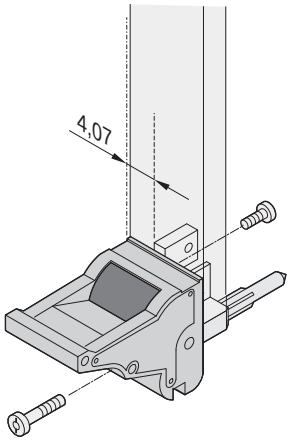

04608050

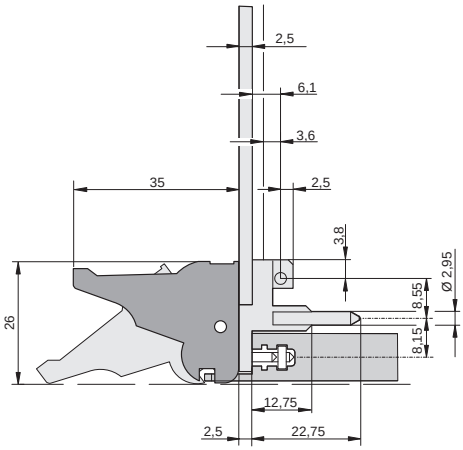

04603059

bottom

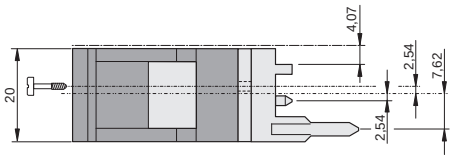

04607053

top

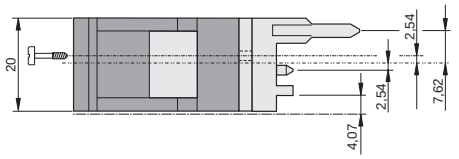

04607054

Dimensions Inserter/extractor handle, type IEL, 0.1" offset

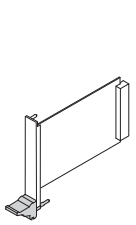

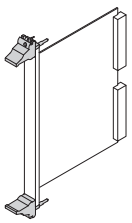

04608071 04608070

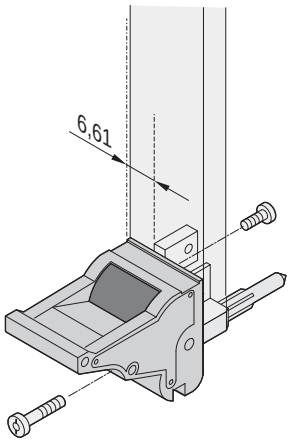

04608051

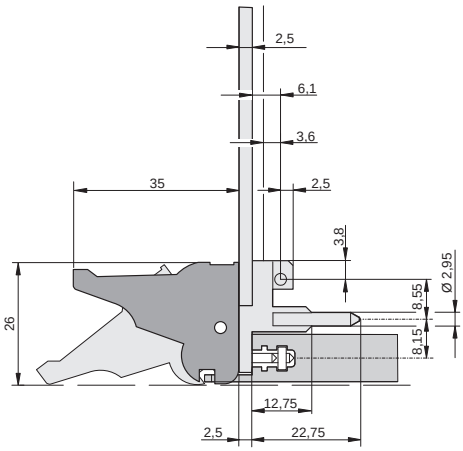

04603059

bottom

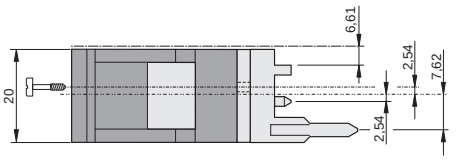

04603061

top

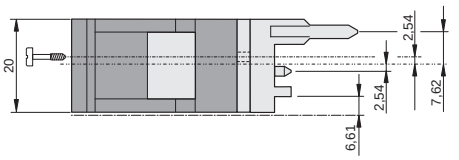

04607055

Dimensions Inserter/extractor handle, type IET

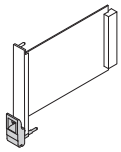

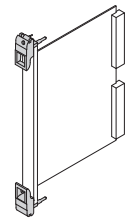

04608073 04608072

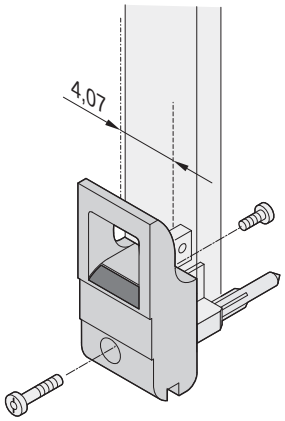

04608054

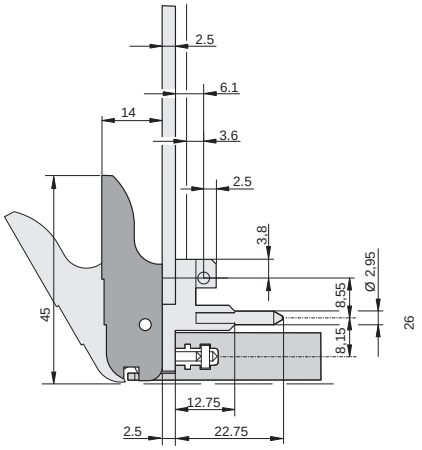

04603060

bottom

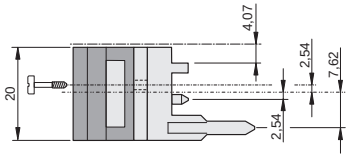

04607056

top

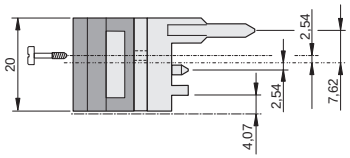

04607057

Dimensions Inserter/extractor handle, type IET, 0.1" offset

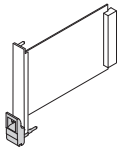

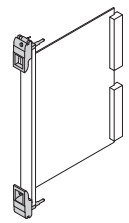

04608073 04608072

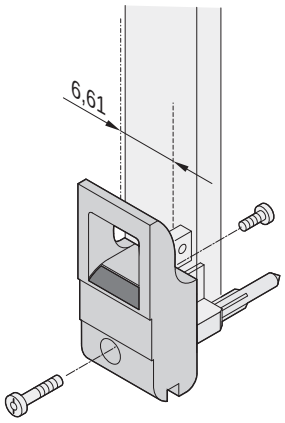

04608055

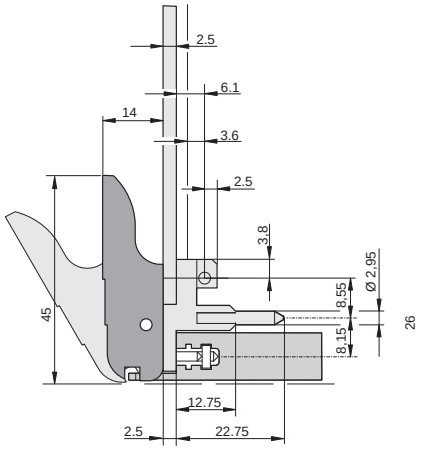

04603060

bottom

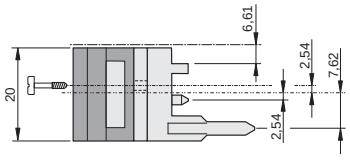

04603062

top

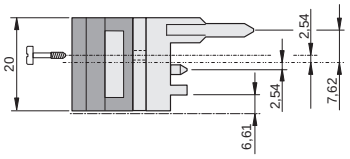

04607058

Part number in bold face type: ready for despatch within 2 working days
Part number in normal type: ready for despatch within 10 working days

Individual components — Inserter/extractor handle, type XL, front panels, microswitch

	Inserter/extractor handle, type XL	U front profile, shieldable, for inserter/extractor handle, type XL		EMC gasket (textile)		Microswitch item 1
		without cut-out for microswitch	with cut-out for microswitch			with cable and plug
	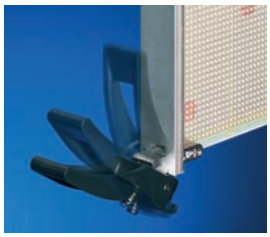 04805008	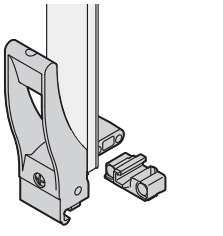 04608081	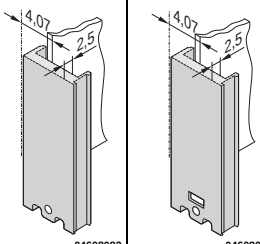 04608082	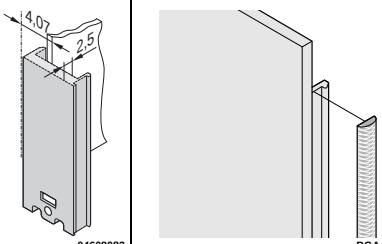 04608083	BGA45760	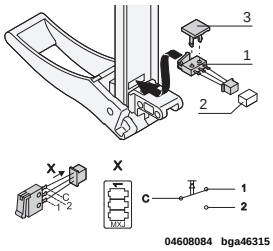 04608084 bga46315
	kit, incl. die-cast bearing and assembly kit; insertion and extraction force up to 1500 Nm per pair; handle in PA, fibreglass reinforced, UL 94V 0; robust board fixing with double bolt fixing, microswitches can be fitted	Al, front anodised, sides and rear conductive, for sleeve and collar screw see page 7.35	Al, front anodised, sides and rear conductive for sleeve and collar screw see page 7.35	always fixed laterally on the front panel, in the groove of the profile, textile gasket, core: foam, sleeve: textile cladding with CuNi coating, UL 94 V-0		Molex connector housing 51021-0300, Molex crimp contact 50058-8000 and fixing clip (item 3), plastic, PC, UL 94 V-0, max. switched current 50 mA, operating range -25 °C to +70 °C, mech. life ≥ 20,000 switching cycles, electr. life ≥ 20,000 switching cycles; suitable mating connector (item 2) e.g. Molex 53261-0319, 53048-0310, 53047-0310, 53398-0319, 51047-0300, not included in scope of delivery
Width HP	PU 10 pieces	1 piece (SPQ 5)[1]	1 piece (SPQ 5)[1]	PU 10 pieces	PU 100 pieces	PU 10 pieces
	6 U Height					
4	20817-874	30849-153	30849-154	21101-855	21101-856	20817-877
8		30849-155	30849-156			
12		30849-157	30849-158			
Dimensions see page	7.30	7.30	7.30			

1) SPQ (standard pack quantity): Part number includes 1 piece, but delivery is exclusively made in standard pack quantity (SPQ); please order at least the SPQ quantity or a multiple

Part no. includes one packing unit (PU); delivery is exclusively made in PU

Note

- Please order front panels separately

Dimensions U front profile for extractor handle type XL, shieldable

6 U/4 HP

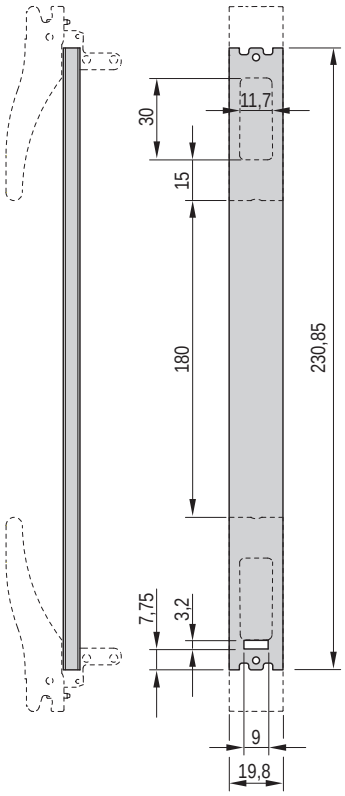

04605053

6 U/8 HP

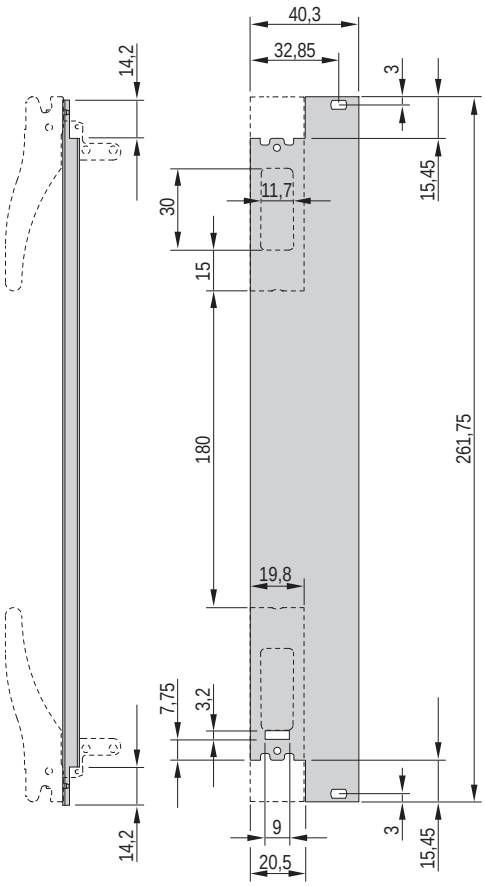

04605054

6 U/12 HP

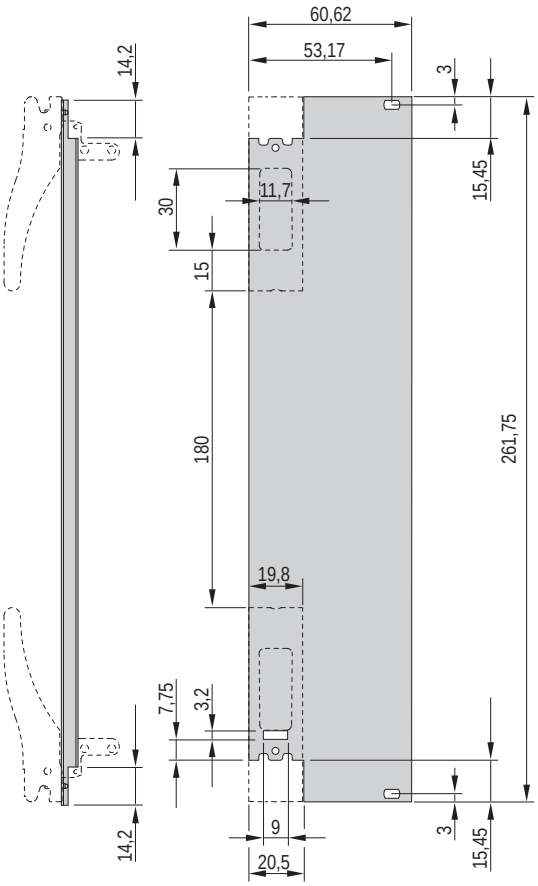

04605055

Dimensions Inserter/extractor handle, type XL

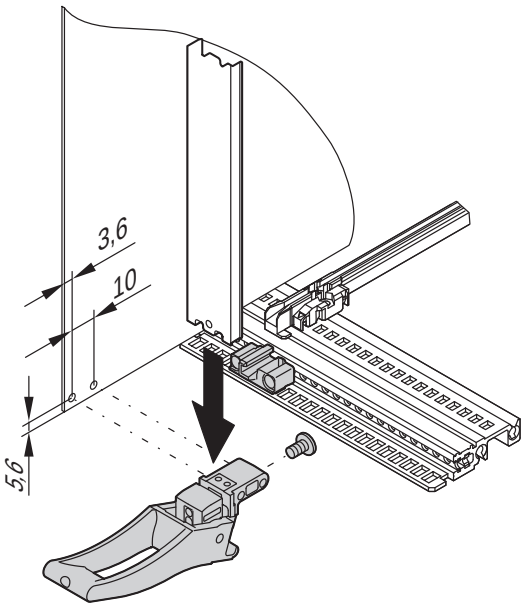

04608113

Part number in bold face type: ready for despatch within 2 working days
Part number in normal type: ready for despatch within 10 working days

Kits

Plug-in units with trapeziform extractor handle, type 2

3 U

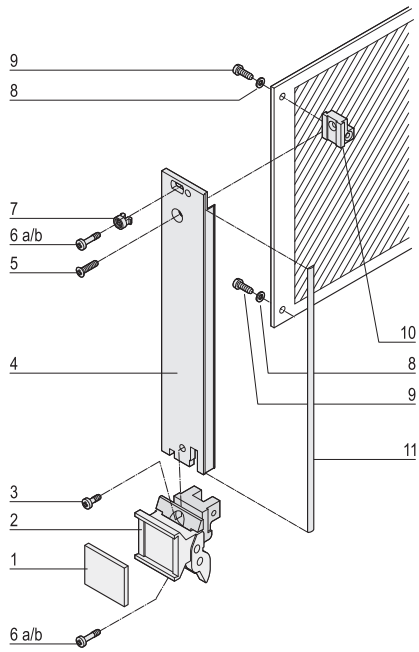

04604050

6 U

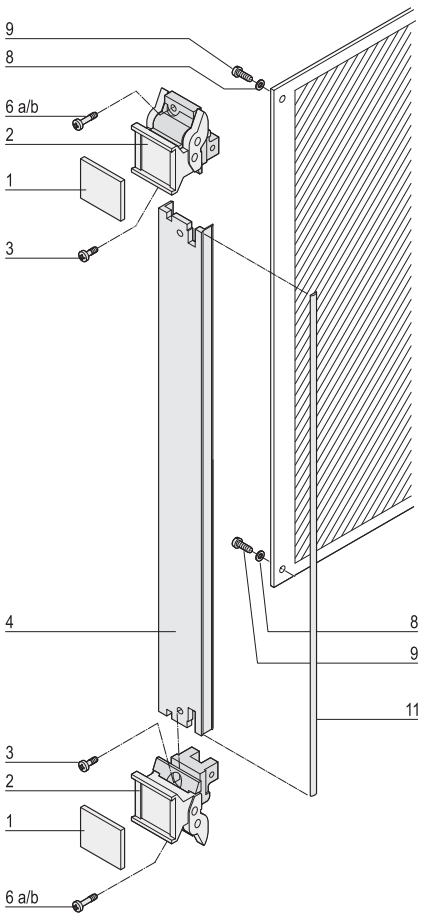

04604051

■ Shielded

Delivery comprises (kit)

Item	Qty 3 U <8HP	Qty 3 U ≥8HP	Qty 6 U <8HP	Qty 6 U ≥8HP	Description
1	1	1	2	2	Identification plate, Al, 1.5 mm, anodised, cut edges untreated
2	1	1	2	2	Extractor handle, trapeziform, type 2, lever: PPE, light grey, RAL 7035, block die-cast zinc, nickel-plated, with integrated alignment pin for perforated strip
3	1	1	2	2	Pozidrive flathead screw, St, M2.5 x 6, nickel-plated
4	1	1	1	1	Front panel, U profile, Al, front anodised, rear conductive
5	1	1	–	–	Raised Pozidrive countersunk screw M2.5 × 8, St, nickel-plated
6a	2	4	2	4	Pozidrive collar screw, M2.5 × 12.3, St, nickel-plated,
6b	2	4	2	4	collar screw, Pozidrive/slot, M2.5 × 11, St, nickel-plated,
7	1	3	–	2	Sleeve, PA, grey
8	2	2	2	2	Washer A 2.7, DIN 125
9	2	2	2	2	Panhead screw with Torx/slot, M2.5 x 6, St, zinc-plated, self-locking
10	1	1	–	–	Board support, die-cast zinc
11	1	1	1	1	EMC sealing (textile), core: foam, sleeve: textile cladding, Cu-Ni coated

Order Information

Height U	Width HP	Part no.
3	4	20848-686
3	6	20848-687
3	8	20848-688
3	10	20848-689
3	12	20848-690
6	4	20848-691
6	6	20848-692
6	8	20848-693
6	10	20848-694
6	12	20848-695

■ Dimension drawings of front profile see page 7.36
■ Description of microswitch see page 7.29

For further information www.schroff.biz/oneclick
oneClick search code = Part no.

Kits

Plug-in units with trapeziform extractor handle, type 2

3 U

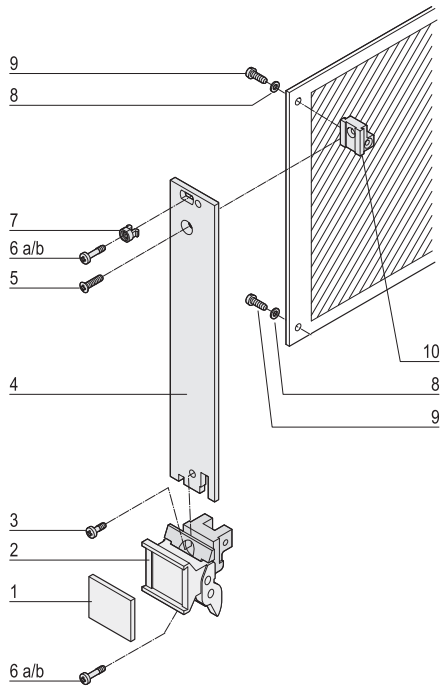

04604052

6 U

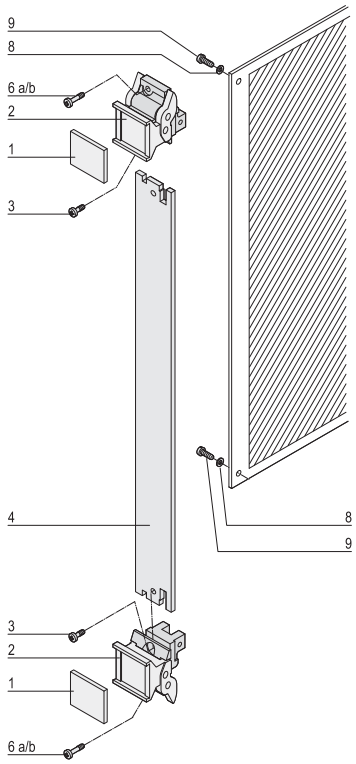

04604053

■ Unshielded

Delivery comprises (kit)

Item	Qty 3 U <8HP	Qty 3 U ≥8HP	Qty 6 U <8HP	Qty 6 U 8 HP	Description
1	1	1	2	2	Identification plate, Al, 1.5 mm, anodised, cut edges plain
2	1	1	2	2	Extractor handle, trapeziform, type 2, lever: PPE, light grey, RAL 7035, block: die-cast zinc, nickel-plated
3	1	1	2	2	Flathead screw M2.5 x 6, nickel-plated
4	1	1	1	1	Front panel, Al, 2.5 mm, front: anodised, rear: irisdescent green chromated
5	1	1	–	–	Raised Pozidrive countersunk screw, M2.5 × 8, St, nickel-plated
6a	2	4	2	4	Slotted Pozidrive collar screw, M2.5 x 12.3, St, nickel-plated,
6b	2	4	2	4	slotted Pozidrive collar screw, M2.5 x 11, St, nickel-plated
7	1	3	–	2	Sleeve, PA, grey
8	2	2	2	2	Washer A 2.7, DIN 125
9	2	2	2	2	Slotted Torx panhead screw, M2.5 x 6, St, zinc-plated, self-locking
10	1	1	–	–	Board support, die-cast zinc

Order Information

Height U	Width HP	Part no.
3	4	20817-860
3	5	20817-861
3	6	20817-862
3	7	20817-863
3	8	20817-864
3	10	20817-865
3	12	20817-866
6	4	20817-867
6	5	20817-868
6	6	20817-869
6	7	20817-870
6	8	20817-871
6	10	20817-872
6	12	20817-873

■ Dimension drawing of front profile see page 7.36
■ Description of microswitch see page 7.29

For further information www.schroff.biz/oneclick
oneClick search code = Part no.

Part number in bold face type: ready for despatch within 2 working days
Part number in normal type: ready for despatch within 10 working days

Individual components — U front profiles/front panels for trapeziform extractor handle, type 2

Order Information

		Front panel, U profile, shieldable	Textile EMC gasket		Front panel, flat, unshielded
		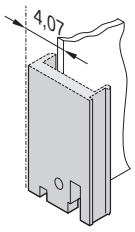 04608060	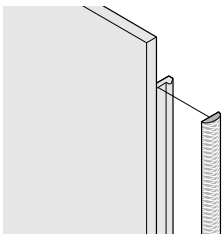 BGA45760		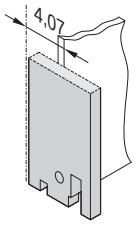 04608063
		Al extrusion, 2.5 mm, front anodised, rear conductive; alignment pin pressed-in (3 U only), stainless steel; manufacturing process causes various surface structures to appear between 4 to 12 HP and 14 to 16 HP	always fixed laterally on the front panel, in the groove of the profile, textile gasket, core: foam, sleeve: textile cladding with CuNi coating, UL 94 V-0, temperature range -40 ... 70 °C		Front panel, Al, 2.5 mm, front anodised, rear irisdescent green chromated
	Width HP	**1 piece (SPQ 5)[1)]**	**PU 10 pieces**	**PU 100 pieces**	**1 piece (SPQ 5)[1)]**
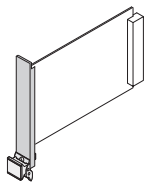 04608109		**3 U Height**			
	4	30848-312	21101-853	21101-854	30848-327
	5	30848-300			30848-328
	6	30848-313			30848-329
	7	30848-301			30848-330
	8	30848-314			30848-331
	10	30848-315			30848-333
	12	30848-316			30848-335
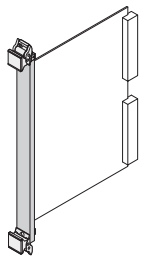 04608107		**6 U Height**			
	4	30848-317	21101-855	21101-856	30848-336
	5	30848-304			30848-337
	6	30848-318			30848-338
	7	30848-305			30848-339
	8	30848-319			30848-340
	10	30848-320			30848-342
	12	30848-321			30848-344
Dimensions see page		7.36			7.36

1) SPQ (standard pack quantity): Part number includes 1 piece, but delivery is exclusively made in standard pack quantity (SPQ); please order at least the SPQ quantity or a multiple

Part no. includes one packing unit (PU); delivery is exclusively made in PU

Individual components — Extractor handle, trapeziform, type 2

Order Information

	Trapeziform extractor handle, type 2 without alignment pin			Trapeziform extractor handle, type 2 with alignment pin		
	lever, light grey, RAL 7035	**lever, dark grey, RAL 7032**	**lever, black, RAL 9005**	**lever, light grey, RAL 7035**	**lever, dark grey, RAL 7032**	**lever, black, RAL 9005**
	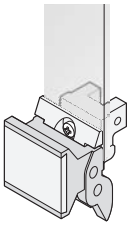 04608085	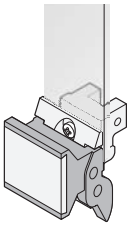 BGA45760	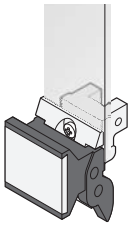 04608087	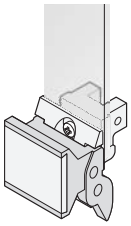 BGA45760	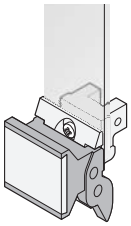 04608086	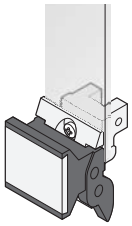 04608087
	Extractor handle, PPE; block, die-cast zinc, zinc-plated; identification plate, Al, 1.5 mm, anodised, cut edges plain; Pozidrive flat-head screw, M2.5 x 6, nickel-plated; slotted Pozidrive collar screw, M2.5 x 12.3, St, nickel-plated; slotted Pozidrive collar screw, M2.5 × 11, St, nickel-plated,			Extractor handle, PPE; block, die-cast zinc, zinc-plated; Identification plate, Al, 1.5 mm, anodised, cut edges plain; Pozidrive flat-head screw, M2.5 x 6, nickel-plated; slotted Pozidrive collar screw, M2.5 x 12.3, St, nickel-plated; slotted Pozidrive collar screw, M2.5 × 11, St, nickel-plated,		
Width HP	**1 piece (SPQ 10)[1)]**	**1 piece (SPQ 10)[1)]**	**1 piece (SPQ 10)[1)]**	**1 piece (SPQ 10)[1)]**	**1 piece (SPQ 10)[1)]**	**1 piece (SPQ 10)[1)]**
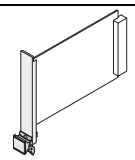 04608114	**3 U Height** bottom					
	20817-858	20817-854	20817-856	20817-833	20817-829	20817-831
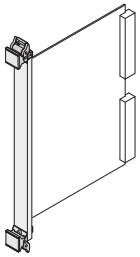 04608115	**6 U Height** top					
	20817-858	20817-854	20817-856	20817-833	20817-829	20817-831
	bottom					
	20817-858	20817-854	20817-856	20817-833	20817-829	20817-831
Dimensions see page	7.37			7.37		

1) SPQ (standard pack quantity): Part number includes 1 piece, but delivery is exclusively made in standard pack quantity (SPQ); please order at least the SPQ quantity or a multiple

Part no. includes one packing unit (PU); delivery is exclusively made in PU

Individual components

Fixing material for trapeziform extractor handle, type 2

Order Information

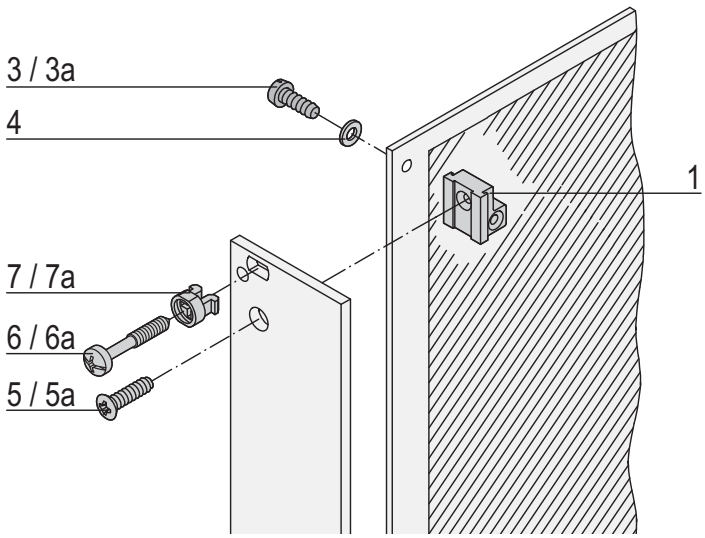

Fixing material	Item		Required quantity 3 U < 8 HP	Required quantity 3 U ≥ 8 HP	Required quantity 6 U < 8 HP	Required quantity 6 U ≥ 8 HP	Qty/PU	Part no.
Printed board bracket Zn die-cast	1	06707050	1	1	–	–	1 Stück (LLG 10)[1)]	60807-181
Pozidrive panhead screw M2.5 × 6, St, nickel-plated	3	AZA45177	2	2	2	2	100	21101-219
Slotted panhead screw with Torx 8 M2.5 × 6, St, zinc-plated Self-securing thread	3a	aza45940	2	2	2	2	100	24560-159
Washer 2.7, St, nickel-plated	4	AZA46586	2	2	2	2	100	21100-721
Raised Pozidrive countersunk panhead screw M2.5 × 8, St, nickel-plated	5	06702056	1	1	–	–	100	21100-429
Raised countersunk panhead screw with Torx 8 M2.5 × 8, St, nickel-plated	5a	06708050	1	1	–	–	100	24560-164
Slotted Pozidrive collar screw M2.5 × 11, St, nickel-plated AZA46586	6	AZA46586	1	3	–	2	100	21100-748
Slotted Pozidrive collar screw M2.5 × 12.3, St, nickel-plated AZA46586	6a	AZA46586	1	3	–	2	100	21101-101
Plastic sleeve, for form hole 5.9 x 3.3 PA, UL 90 V-2, grey	7	aza45933	1	3	–	2	100	21100-464
Metal sleeve, for form hole 5.9 x 3.3, press-in Stainless steal	7a	aza45934	1	3	–	2	100	21100-662

1) SPQ (standard pack quantity): Part number includes 1 piece, but delivery is exclusively made in standard pack quantity (SPQ); please order at least the SPQ quantity or a multiple

Dimensions Front panels, U profiles, for trapeziform extractor handles, type 2

3 U

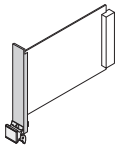

04608109

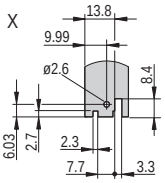

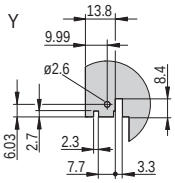

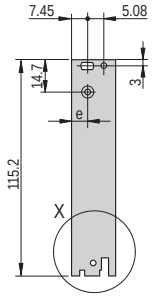

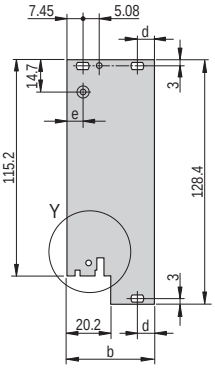

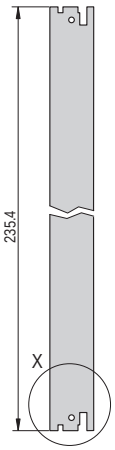

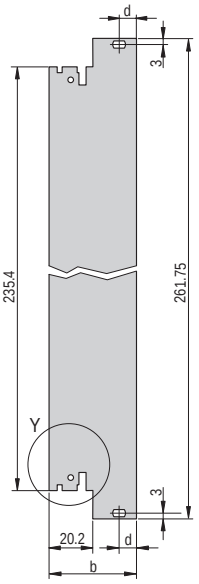

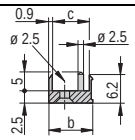

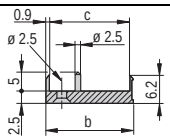

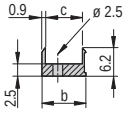

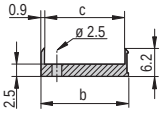

shieldable

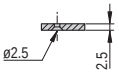

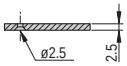



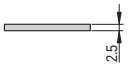

unshielded

04608064 04608077

04608065 04608078

4 HP ≥5 HP 4 HP ≥5 HP

6 U

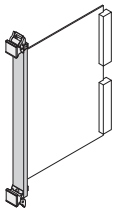

04608107

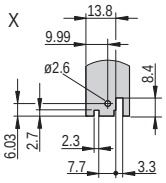

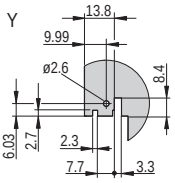

Dimensions table

Width HP	b mm	c mm	d mm
4	19.98	17.45	–
5	25.06	22.53	–
6	30.14	27.61	–
7	35.22	32.69	–
8	40.30	37.77	7.45
9	45.38	42.85	7.45
10	50.46	47.93	7.45
11	55.54	53.01	7.45
12	60.62	58.09	7.45
14	70.78	68.25	7.45
16	80.94	78.41	7.45

Part number in bold face type: ready for despatch within 2 working days
Part number in normal type: ready for despatch within 10 working days

Dimension drawings — Extractor handle, trapeziform, type 2

with alignment pin

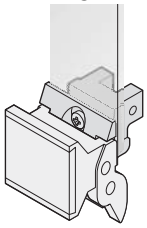

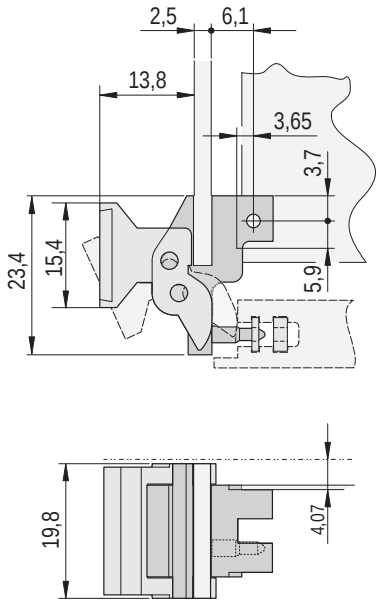

without alignment pin

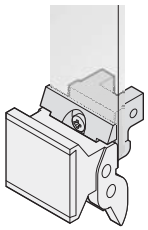

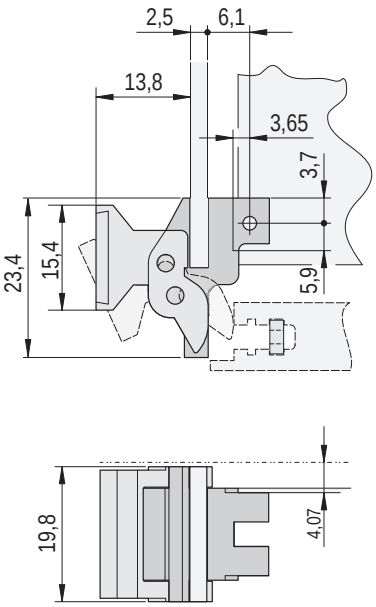

Kits

Plug-in units with trapeziform extractor handle, type 1 – front panel, U-profile, shielded

3 U

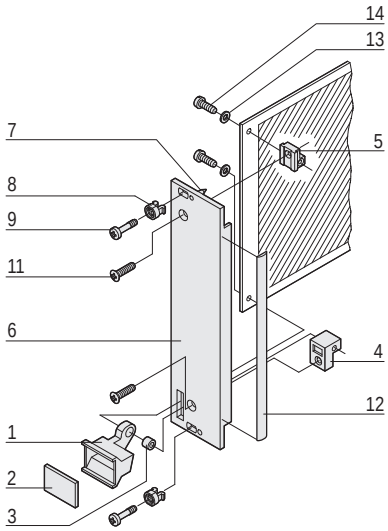

04602058

6 U

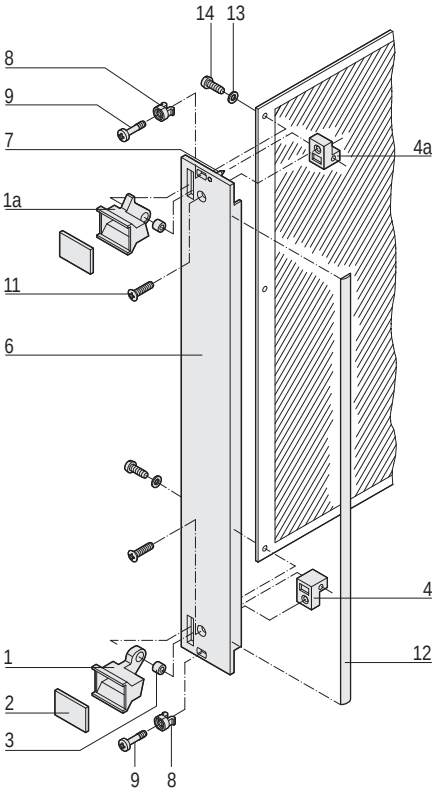

04602059

- At 6 U the board position can be offset by 1 HP to the right by swapping the top and bottom board supports; thus space is created for SMD components on the left (solder) side; for board thickness 1.6 mm only

Delivery comprises (kit)

Item	Qty 3 U	Qty 6 U	Description
1	1	1	Extractor handle, trapeziform type, PPE, grey, bottom
1a	-	1	Extractor handle, trapeziform type, PPE, grey, top
2	1	2	Identification plate, Al, 1.5 mm, anodised, cut edges plain
3	1	2	Pivot bush, Ms
4	1	1	Board support, die-cast zinc, bottom
4a	-	1	Board support, die-cast zinc, top
5	1	-	Board support, die-cast zinc
6	1	1	Front panel, U profile, for trapeziform extractor handle, front anodised, rear conductive
7	2	2	Alignment pin, pressed-in, stainless steel
8	2	2	Sleeve, PA, grey, up to 7 HP front panel width
8	4	4	Sleeve, PA, grey, from 8 HP front panel width
9	2	2	Collar screw, Pozidrive/slot, St, nickel-plated, M2.5 × 12.3, front panel width up to 7 HP
9	4	4	Collar screw, Pozidrive/slot, St, nickel-plated, M2.5 × 12.3, front panel width from 8 HP
11	1	2	Raised countersunk panhead screw, M2.5 × 8
12	1	1	EMC gasket (textile)
13	2	2	Washer, A2.7, DIN 125
14	2	2	Pozidrive flathead screw, St, nickel-plated, M2.5 × 10

Order Information

Width HP	3 U Part no.	6 U Part no.
4	20848-485	20848-492
6	20848-487	20848-494
8	20848-489	20848-496
10	20848-490	20848-497
12	20848-491	20848-498

For further information www.schroff.biz/oneclick
oneClick search code = Part no.

Part number in bold face type: ready for despatch within 2 working days
Part number in normal type: ready for despatch within 10 working days

Kits

Plug-in units with trapeziform extractor handle, type 1 – front panel unshielded

3 U

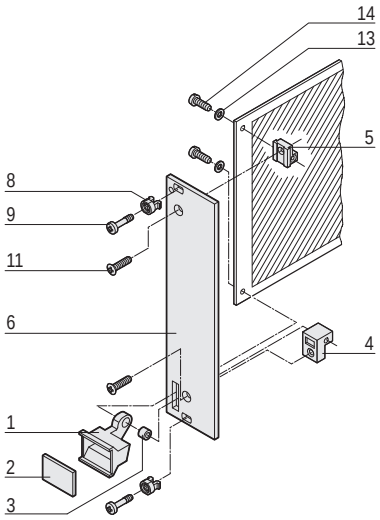

04602060

6 U

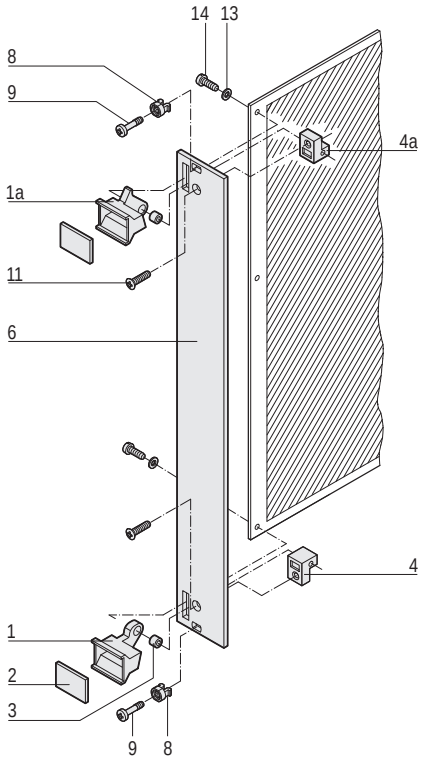

04602061

- At 6 U the board position can be offset by 1 HP to the right by swapping the top and bottom board supports; thus space is created for SMD components on the left (solder) side; for board thickness 1.6 mm only

Delivery comprises (kit)

Item	Qty 3 U	Qty 6 U	Description
1	1	1	Extractor handle, trapezium shape, PPE, grey, bottom
1a	–	1	Extractor handle, trapezium shape, PPE, grey, top
2	1	2	Identification plate, Al, 1.5 mm, anodised, cut edges plain
3	1	2	Pivot bush, Ms
4	1	1	Board support, die-cast zinc, bottom
4a	–	1	Board support, die-cast zinc, top
5	1	–	Board support, die-cast zinc
6	1	1	Front panel for trapeziform extractor handle, front anodised, rear irisdescent green chromated
8	2	2	Sleeve, PA, grey, up to 7 HP front panel width
8	4	4	Sleeve, PA, grey, from 8 HP front panel width
9	2	2	Collar screw, Pozidrive/slot, St, nickel-plated, M2.5 × 11 and 12.3, front panel width up to 7 HP
9	4	4	Collar screw, Pozidrive/slot, St, nickel-plated, M2.5 × 11 and 12.3, front panel width from 8 HP
11	1	2	Raised countersunk panhead screw, M2.5 × 8
13	2	2	Washer, A2.7, DIN 125
14	2	2	Pozidrive flathead screw, St, nickel-plated, M2.5 × 10

Order Information

Width HP	3 U Part no.	6 U Part no.
4	20817-443	20817-448
5	20817-444	20817-449
6	20817-445	20817-450
7	20817-446	20817-451
8	20817-447	20817-452
10	20817-456	20817-458
12	20817-457	20817-459

For further information www.schroff.biz/oneclick
oneClick search code = Part no.

Individual components — Front panels and EMC gaskets, for trapezoidal extractor handle, type 1

Order Information

	Width HP	Front panel, U profile, shieldable	Textile EMC gasket		Front panel, unshielded
		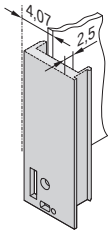 04608091	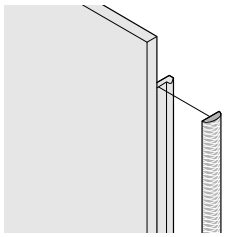 BGA45760		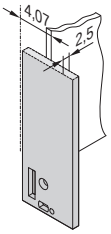 04608092
		Al profile, front anodised, rear conductive, alignment pin pressed-in, stainless steel	always fixed laterally on the front panel, in the groove of the profile, textile gasket, core: foam, sleeve: textile cladding with CuNi coating, UL 94 V-0, temperature range -40 ... 70 °C		front panel, Al, 2.5 mm, front anodised, rear irisdescent green chromated
		1 piece (SPQ 5)[1)]	**PU 10 pieces**	**PU 100 pieces**	**1 piece (SPQ 5)[1)]**
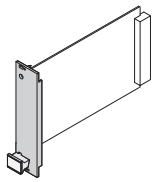 04608117		**3 U Height**			
	4	30848-461	21101-853	21101-854	30847-659
	5	–			30847-660
	6	30848-463			30847-661
	7	–			30847-662
	8	30848-465			30847-663
	10	30848-466			30847-664
	12	30848-467			30847-665
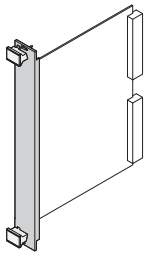 04608116		**6 U Height**			
	4	30848-468	21101-855	21101-856	30847-666
	5	–			30847-667
	6	30848-470			30847-668
	7	–			30847-669
	8	30848-472			30847-670
	10	30848-473			30847-671
	12	30848-474			30847-672
Dimensions see page		7.43			7.43

1) SPQ (standard pack quantity): Part number includes 1 piece, but delivery is exclusively made in standard pack quantity (SPQ); please order at least the SPQ quantity or a multiple

Part no. includes one packing unit (PU); delivery is exclusively made in PU

Individual components

Trapeziform extractor handles, type 1

Order Information

Width HP	Trapeziform extractor handle black 1 piece (SPQ 10)[1)]	Trapeziform extractor handle grey 1 piece (SPQ 10)[1)]
	 04608093	 04608094
	handle closed laterally, PPE, UL 94 V-1, black; pivot bush; identification plate, Al, 1.5 mm, anodised, cut edges plain; board support die-cast zinc; in the 6 U version, space can be created for SMD components on the left side by swapping the top and bottom handles and thus moving the PCB position 1 HP to the right	
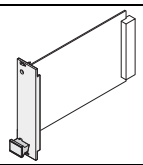 04608119	**3 U Height** top	
	20817-329	20817-327
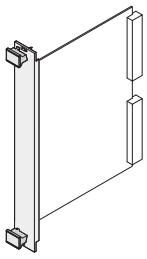 04608118	**6 U Height** top	
	20817-330	20817-328
	bottom	
	20817-329	20817-327

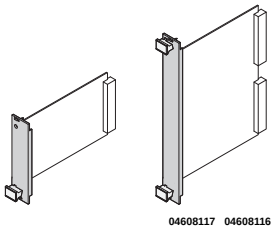

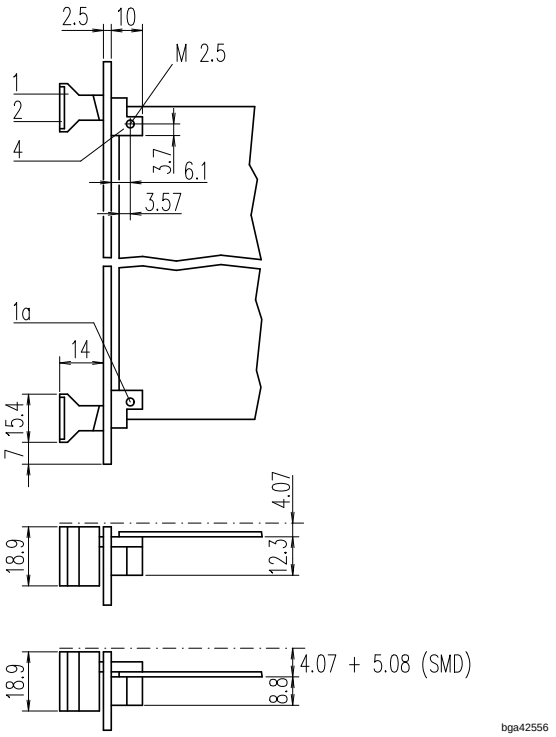

1) SPQ (standard pack quantity): Part number includes 1 piece, but delivery is exclusively made in standard pack quantity (SPQ); please order at least the SPQ quantity or a multiple

Individual components — Fixing material for trapeziform extractor handle, type 1

Order Information

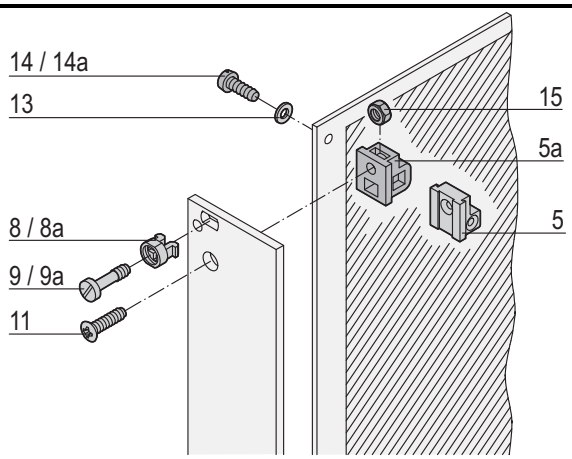

bga42545

Fixing material	Item		Required Qty 3 U < 8 HP	Required Qty 3 U ≥ 8 HP	Required Qty 6 U < 8 HP	Required Qty 6 U ≥ 8 HP	Qty/PU	Part no.
Board support, die-cast zinc, with thread M2.5, for front panel and PCB fixing	5	06707050	1	2	2	4	1 piece (SPQ 10)[1]	60807-181
Board support, plastic, PBT, UL 94 V-0, grey, with recess for hexagon nut M2.5, for fixing front panel	5a	AZA45177	1	2	2	4	1 piece (SPQ 10)[1]	60807-183
Plastic sleeve, for form hole 5.9 x 3.3 PA, UL 90 V-2, grey	8	aza45933	2	4	2	4	100	21100-464
Metal sleeve, for form hole 5.9 x 3.3, press-in Stainless steal	8a	aza45934	2	4	–	–	100	21100-662
Pozidrive/slotted collar screw M2.5 × 11, St, nickel-plated AZA46586	9	AZA46586	2	4	2	4	100	21100-748
Pozidrive/slotted collar screw M2.5 × 12.3, St, nickel-plated AZA46586	9a	AZA46586	2	4	2	4	100	21101-101
Raised Pozidrive countersunk screw M2.5 × 8, St, nickel-plated	11	06702056	2	2	2	2	100	21100-429
Washer 2.7 DIN 125, St, nickel-plated, 100 pieces	13	AZA46586	2	2	2	2	100	21100-721
Pozidrive panhead screw M2.5 × 10, St, nickel-plated for item 5	14	AZA45177	2	2	2	2	100	21101-220
Panhead screw, self-tapping 2.5 x 8, St, zinc-plated for item 5b	14a	06702057	1	1	–	–	100	21100-710
Hexagon nut M2.5, nickel-plated steel for item 5b	15	aza43239	1	1	–	–	100	21100-144

1) SPQ (standard pack quantity): Part number includes 1 piece, but delivery is exclusively made in standard pack quantity (SPQ); please order at least the SPQ quantity or a multiple

Dimensions — Front panels for trapezoidal extractor handles, type 1, shielded/unshielded

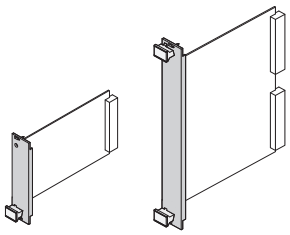

04608117 04608116

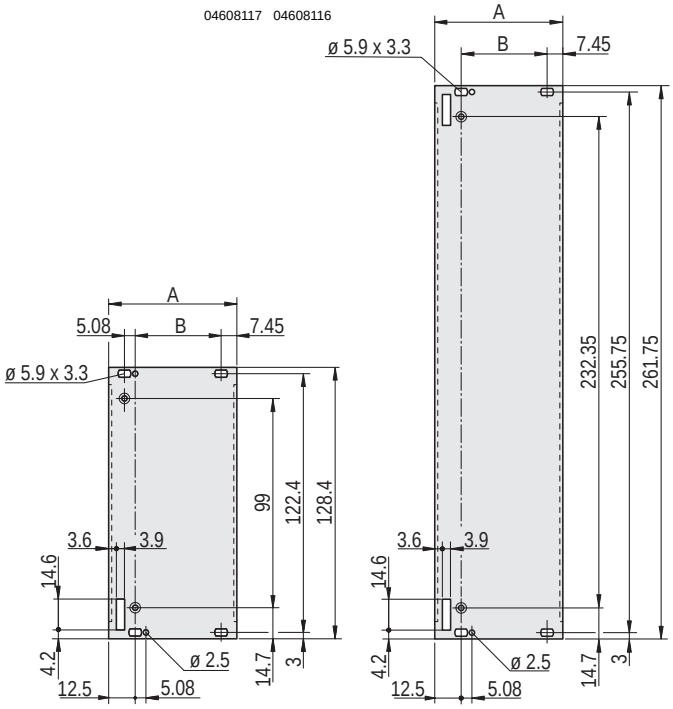

04603064

3 U 6 U

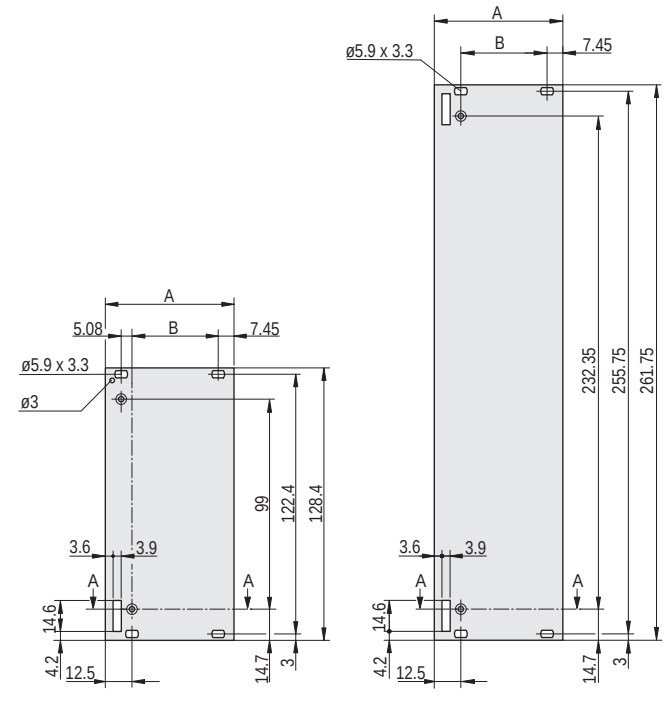

04603063

3 U 6 U

Dimensions table

Width HP	A mm	B mm
4	19.98	–
5	25.06	–
6	30.14	–
7	35.22	–
8	40.30	20.32
10	50.46	30.48
12	60.62	40.64

Individual components — Front panels/extractor handles for Multibus® II, symmetrical/SMDversion

Order Information

		U front profile	Mounting block for D-Sub connector (50 pin)	Extractor handle for Multibus® II symmetrical handle grey, RAL 7032	Extractor handle for Multibus® II SMD handle grey, RAL 7032
		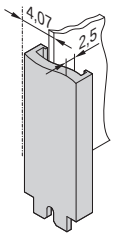 04608095	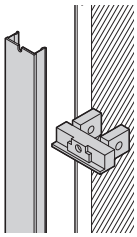 04608098	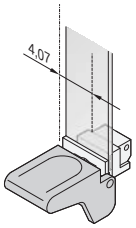 04608099	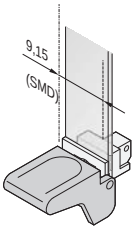 04608108
		Al extrusion, 1 mm	for fixing D-Sub connectors 50-pin, thread on front UNC4/40; required quantity: for 6 U 1x, for 9 U 2x	extractor handle for Multibus® II, PC, UL 94 V-0; bearing, Zn die-cast, nickel-plated; slotted cheesehead screw, M2.5 x 6, Pozidrive/slotted collar screw, M2.5 × 12.3, St, nickel-plated in the 6 U version, space can be created for SMD components on the left side by swapping the top and bottom handles and thus moving the PCB position 1 HP to the right	
	Width HP	**1 piece (SPQ 5)[1)]**	**1 piece (SPQ 10)[1)]**	**1 piece (SPQ 10)[1)]**	**1 piece (SPQ 10)[1)]**
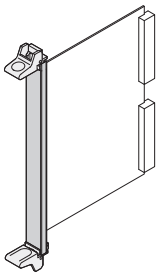 04608120		**6 U Height**		**6 U Height** top	
	4	30829-001	60829-008	20829-011	20829-004
				bottom	
				20829-011	20829-003
		9 U Height		**9 U Height** top	
	4	30829-007	60829-008	20829-011	20829-004
				bottom	
				20829-011	20829-003
Dimensions see page		7.45	7.45	7.45	7.45

1) SPQ (standard pack quantity): Part number includes 1 piece, but delivery is exclusively made in standard pack quantity (SPQ); please order at least the SPQ quantity or a multiple

Part no. includes one packing unit (PU); delivery is exclusively made in PU

Dimension drawings — Front panels, U profile / front panel for Multibus® II

6/9 U

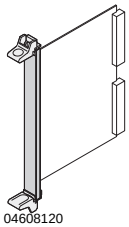

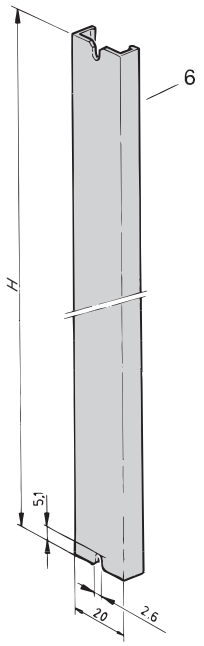

Dimensions table

Height U	Height mm
6	230.4
9	363.7

A4-2580

6 U

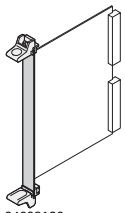

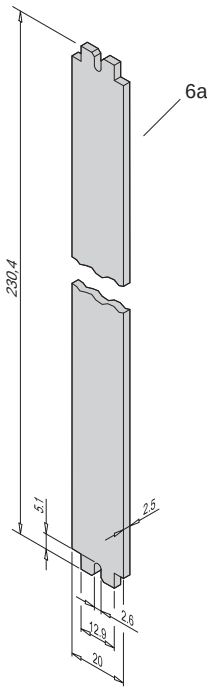

BGA46120

Dimensions — Extractor handles, mounting block for Multibus® II

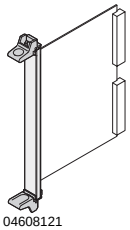

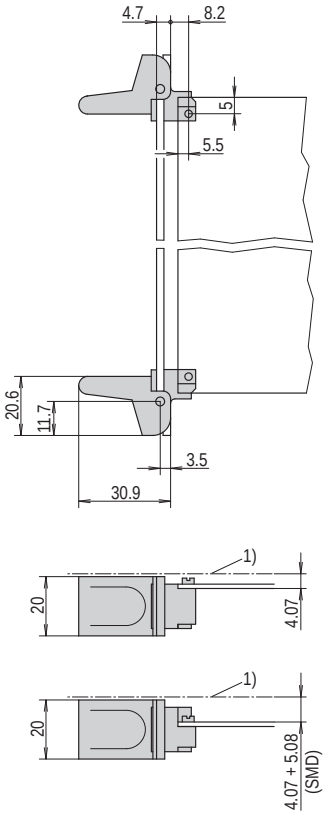

gba42579

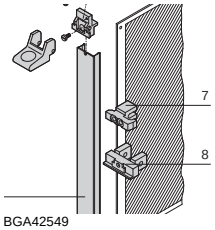

for D-Sub connector (50 pin)

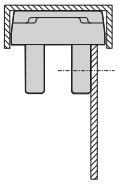

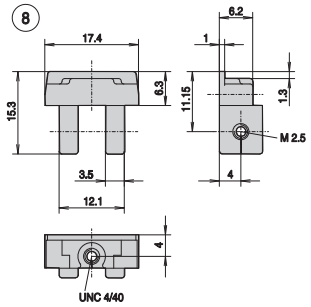

BGA42585

Individual components

Extractor handles in key form 1

Order Information

	Extractor handle		Front panel	Fixing clip
	black	**grey**		
	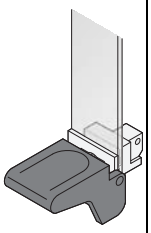 04608101	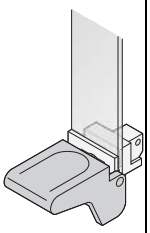 04608102	 04608103	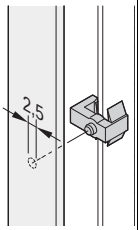 bga42544
	extractor handle in key form 1, PC, UL 94 V-0; bearing Zn die-cast, nickel-plated; slotted cheesehead screw, M2.5 x 6 (fitted); in the 6 U version, space can be created for SMD components on the left side by swapping the top and bottom handles and thus moving the PCB position 1 HP to the right		Al, 2.5 mm; available on request	for fixing PCB to the front panel (blind hole X2.6, depth 1.3 mm); also for SMD applications; clip, PPE, UL 94 V-0, red
Width HP	**1 piece (SPQ 10)[1)]**	**1 piece (SPQ 10)[1)]**		**PU 100 pieces**
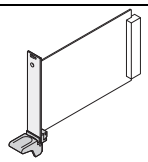 04608123	**3 U Height** bottom			
	20817-345	20817-325	–	–
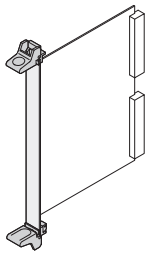 04608122	**6 U Height** top			
	20817-346	20817-326	–	21100-719
	bottom			
	20817-345	20817-325	–	
Dimensions see page	7.48	7.48	7.48	

1) SPQ (standard pack quantity): Part number includes 1 piece, but delivery is exclusively made in standard pack quantity (SPQ); please order at least the SPQ quantity or a multiple

Part no. includes one packing unit (PU); delivery is exclusively made in PU

Individual components

Fixing material for extractor handle in key form 1

Order Information

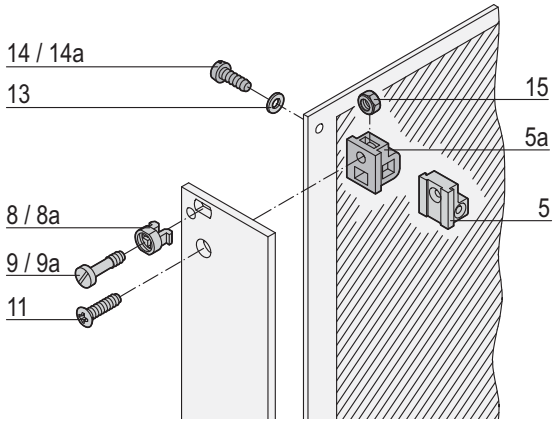

bga42545

Fixing material	Item		Required Qty 3 U	Required Qty 6 U	Qty/PU	Part no.
Board support, die-cast zinc, with thread M2.5, for front panel and PCB fixing	5	06707050	1	–	1 piece (SPQ 10)[1)]	60807-181
Board support, plastic, PBT, UL 94 V-0, grey, with recess for hexagon nut M2.5, for fixing front panel	5a	AZA45177	1	–	1 piece (SPQ 10)[1)]	60807-183
Plastic sleeve, for form hole 5.9 x 3.3 PA, UL 90 V-2, grey	8	aza45933	1	–	100	21100-464
Metal sleeve, for form hole 5.9 x 3.3, press-in Stainless steal	8a	aza45934	1	–	100	21100-662
Pozidrive/slotted collar screw M2.5 × 11, St, nickel-plated	9	AZA46586	2	2	100	21100-748
Pozidrive/slotted collar screw M2.5 × 12.3, St, nickel-plated	9a	AZA46586	2	2	100	21101-101
Raised Pozidrive countersunk screw M2.5 × 8, St, nickel-plated	11	06702056	1	–	100	21100-429
Washer 2.7 DIN 125, St, nickel-plated, 100 pieces	13	AZA46586	2	2	100	21100-721
Pozidrive panhead screw M2.5 × 10, St, nickel-plated for item 5	14	AZA45177	2	2	100	21101-220
Pan head screw, self-tapping 2.5 x 8, St, zinc-plated for item 5b	14a	06702057	1	–	100	21100-710
Hexagon nut M2.5, nickel-plated steel for item 5b	15	aza43239	3	6	100	21100-144

1) SPQ (standard pack quantity): Part number includes 1 piece, but delivery is exclusively made in standard pack quantity (SPQ); please order at least the SPQ quantity or a multiple

Dimensions Extractor handles/front panels key form 1

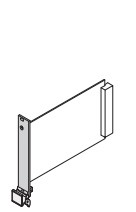

04608089 04603055

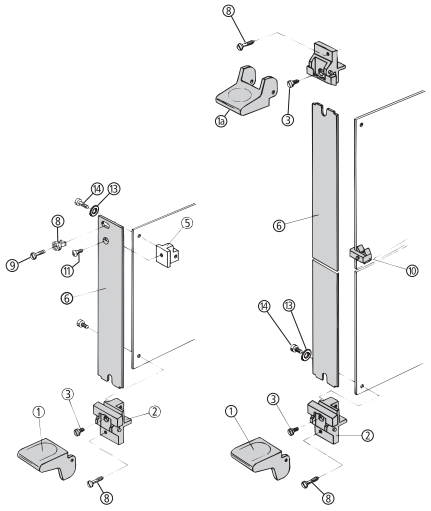

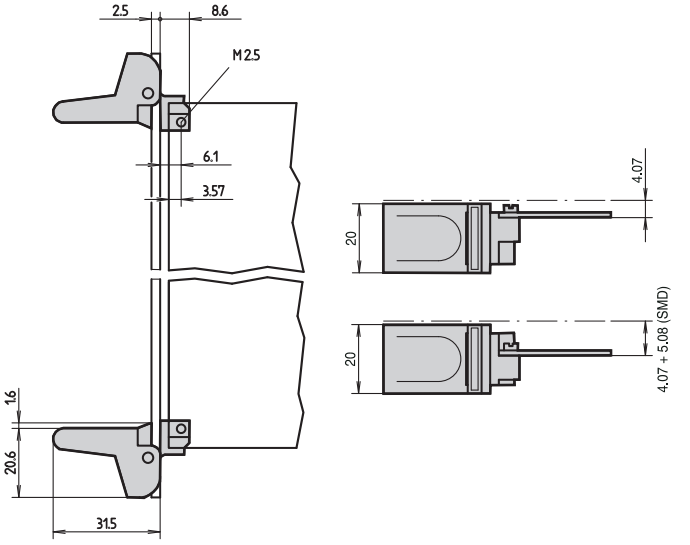

04603056

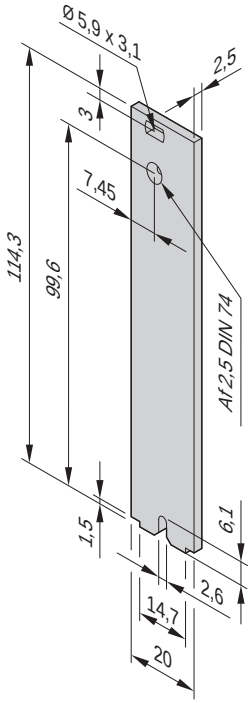

3 U

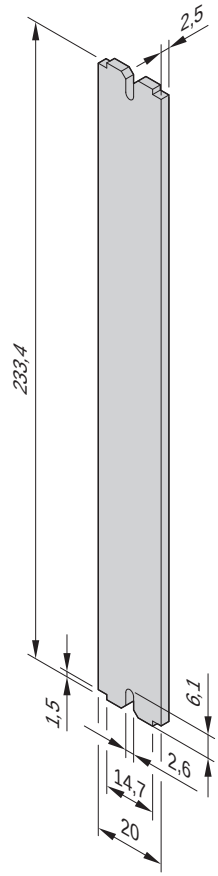

6 U

04603057

Part number in bold face type: ready for despatch within 2 working days
Part number in normal type: ready for despatch within 10 working days

Individual components Extractor handles in key form 2

Order Information

	Extractor handle black	Front panel
	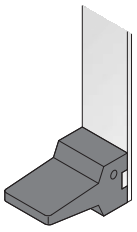 04608104	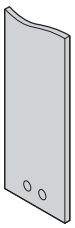 04608106
	extractor handle, PBT, UL 90 V-0; bearing Zn die-cast, nickel-plated; incl. assembly kit for handle mounting	Al, 2.5 mm; available on request
Width HP	1 piece (SPQ 10)[1]	
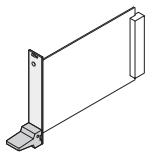 04608124	**3 U Height** top	
	20808-137	–
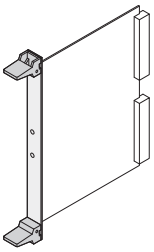 04608125	**6 U Height** top	
	20808-137	–
	bottom	
	20808-137	–
Dimensions see page	7.51	7.51

1) SPQ (standard pack quantity): Part number includes 1 piece, but delivery is exclusively made in standard pack quantity (SPQ);
please order at least the SPQ quantity or a multiple
Part no. includes one packing unit (PU); delivery is exclusively made in PU

Fixing material for extractor handles, key form 2

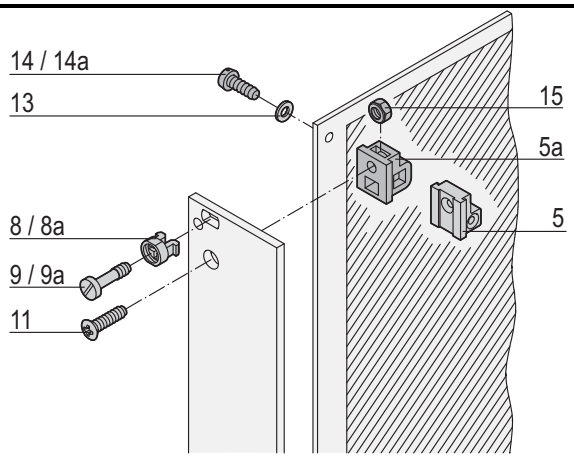

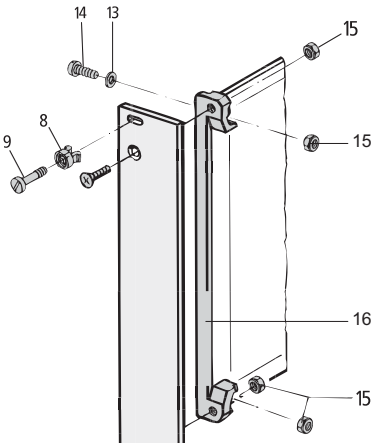

Fixing material	Item		Required Qty		Qty/PU	Part no.
			3 U	6 U		
Board support, die-cast zinc, with thread M2.5, for front panel and PCB fixing	5	 06707050	1	2	1 piece (SPQ 10)[1)]	60807-181
Board support, plastic, PBT, UL 94 V-0, grey, with recess for hexagon nut M2.5, for fixing front panel	5a	 AZA45177	1	2	1 piece (SPQ 10)[1)]	60807-183
Plastic sleeve, for form hole 5.9 x 3.3 PA, UL 90 V-2, grey	8	 aza45933	1	–	100	21100-464
Metal sleeve, for form hole 5.9 x 3.3, press-in Stainless steal	8a	 aza45934	1	–	100	21100-662
Pozidrive/slotted collar screw M2.5 × 11, St, nickel-plated	9	 AZA46586	2	2	100	21100-748
Pozidrive/slotted collar screw M2.5 × 12.3, St, nickel-plated	9a	 AZA46586	2	2	100	21101-101
Raised Pozidrive countersunk screw M2.5 × 8, St, nickel-plated	11	 06702056	1	–	100	21100-429
Washer 2.7 DIN 125, St, nickel-plated, 100 pieces	13	 AZA46586	2	2	100	21100-721
Pozidrive panhead screw M2.5 × 10, St, nickel-plated for item 5	14	 AZA45177	2	2	100	21101-220
Panhead screw, self-tapping 2.5 x 8, St, zinc-plated for item 5b	14a	 06702057	1	–	100	21100-710
Hexagon nut M2.5, nickel-plated steel for item 5b	15	 aza43239	3	–	100	21100-144
PCB bracket 4 clearance holes for front panel/PCB fixing, 4 recesses for hexagon nuts; PBT, UL 94 V?0, red	16	 04608138	1	2	1 piece (SPQ 10)	60807-011

1) SPQ (standard pack quantity): Part number includes 1 piece, but delivery is exclusively made in standard pack quantity (SPQ); please order at least the SPQ quantity or a multiple

Plug-in units – for IEC 60297, key form 2

Dimensions Handles/front panels key form 2

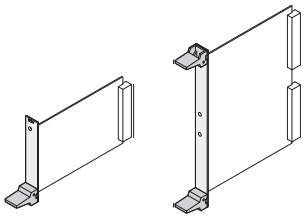

04608124 04608125

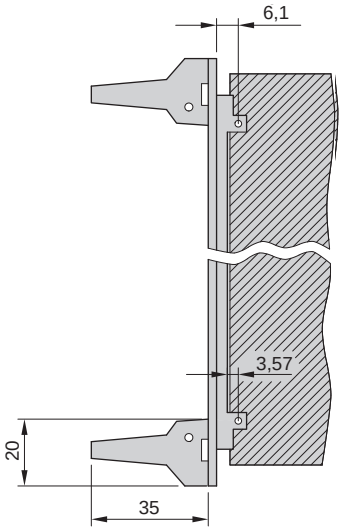

BGA42573

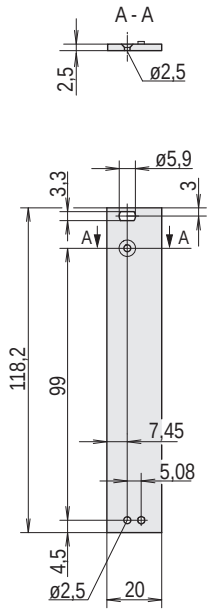

3 U

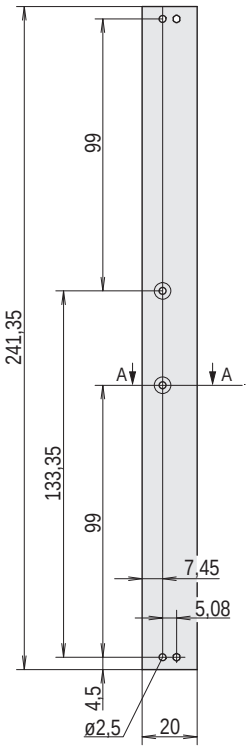

6 U

BGA42578

Dimensions Drill hole dimensions on the PCB key form 2

3 U

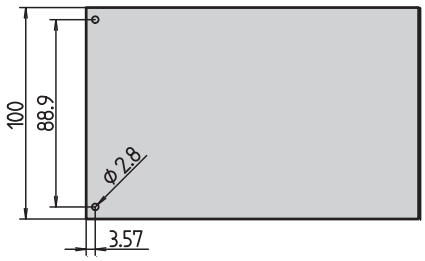

BGA43076

6 U

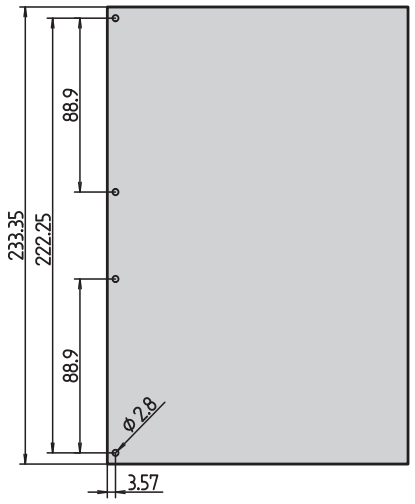

BGA43077

Kits

Plug-in unit with static trapeziform handle

3 U

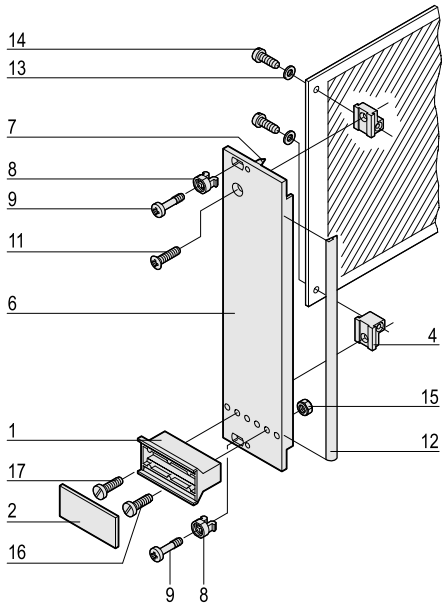

04602062

6 U

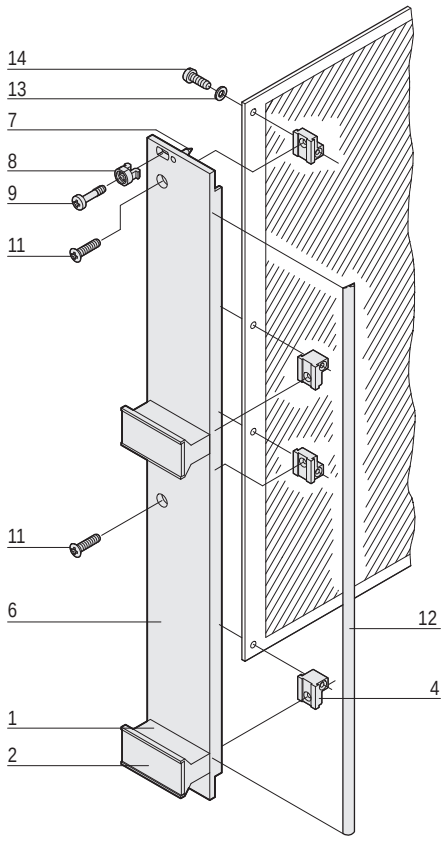

04602063

- Front panel, U-profile, shielded
- Handle without extraction function

Delivery comprises

Item	Qty		Description
	3 U	6 U	
1	1	2	Plastic handle, trapeziform, PPE, grey
2	1	2	Identification plate, Al, 1.5 mm, anodised, cut edges plain
4	2	4	Board support, die-cast zinc
6	1	1	Front panel, U profile, for trapeziform handle, front anodised, rear conductive
7	2	2	Alignment pin, pressed-in, stainless steel
8	2	2	Sleeve, PA, grey, up to 7 HP front panel width
8	4	4	Sleeve, PA, grey, from 8 HP front panel width
9	2	2	Pozidrive/slotted collar screw, St, nickel-plated, M2.5 × 11 and 12.3, front panel width up to 7 HP
9	4	4	Pozidrive/slotted collar screw, St, nickel-plated, M2.5 × 11 and 12.3, front panel width from 8 HP
11	1	2	Raised countersunk screw, St, nickel-plated, M2.5 × 8
12	1	1	EMC sealing (textile)
13	2	4	Washer, A2.7, DIN 125
14	2	4	Pozidrive flathead screw, St, nickel-plated, M2.5 × 10
15	1	2	Hexagon nut, St, nickel-plated, M2.5
16	1	2	Pozidrive flathead screw, St, nickel-plated, M2.5 × 12
17	1	2	Pozidrive flathead screw, St, nickel-plated, M2.5 × 16

Order Information

Width HP	3 U Part no.	6 U Part no.
3	20848-663	20848-671
4	20848-664	20848-672
5	20848-665	20848-673
6	20848-666	20848-674
7	20848-667	20848-675
8	20848-668	20848-676
10	20848-669	20848-677
12	20848-670	20848-678

For further information www.schroff.biz/oneclick
oneClick search code = Part no.

Part number in bold face type: ready for despatch within 2 working days
Part number in normal type: ready for despatch within 10 working days

Kits

Plug-in unit with static trapeziform handle

3 U

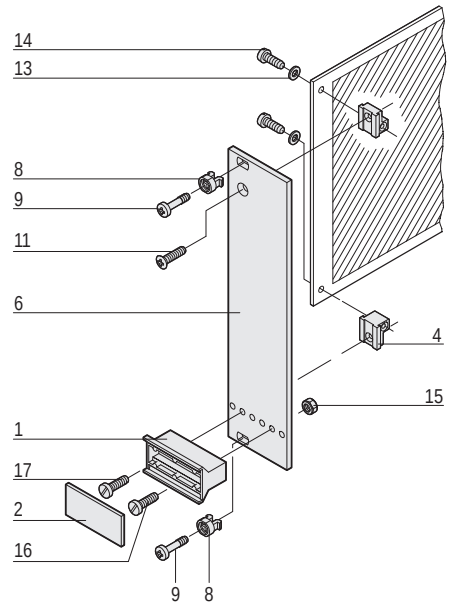

04602064

6 U

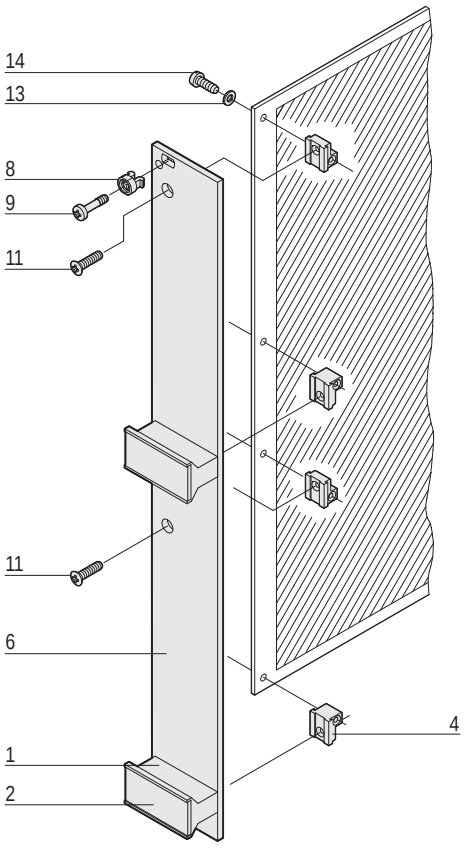

04602065

- Front panel unshielded
- Handle without extraction function

Delivery comprises

Item	Qty		Description
	3 U	6 U	
1	1	2	Plastic handle, trapeziform, PPE, grey
2	1	2	Identification plate, Al, 1.5 mm, anodised, cut edges untreated
4	2	4	Board support, die-cast zinc
6	1	1	Front panel for trapeziform handle, front anodised, rear irisdescent green chromated
8	2	2	Sleeve, PA, grey, up to 7 HP front panel width
8	4	4	Sleeve, PA, grey, from 8 HP front panel width
9	2	2	Pozidrive/slotted collar screw, St, nickel-plated, M2.5 × 11 and 12.3, front panel width up to 7 HP
9	4	4	Pozidrive/slotted collar screw, St, nickel-plated, M2.5 × 11 and 12.3, front panel width from 8 HP
11	1	2	Raised countersunk screw, St, nickel-plated, M2.5 × 8
13	2	4	Washer, A2.7
14	2	4	Pozidrive flathead screw, St, nickel-plated, M2.5 × 8
15	1	2	Hexagon nut, St, nickel-plated, M2.5
16	1	2	Pozidrive flathead screw, St, nickel-plated, M2.5 × 12
17	1	2	Pozidrive flathead screw, St, nickel-plated, M2.5 × 16

Order Information

Width	3 U	6 U
HP	Part no.	Part no.
3	20818-017	20809-507
4	20818-018	20818-025
5	20818-019	20818-026
6	20818-020	20818-027
7	20818-021	20818-162
8	20818-022	20818-028
10	20818-023	20818-029
12	20818-024	20818-120

For further information www.schroff.biz/oneclick
oneClick search code = Part no.

Order Information

	Width HP	Front panel, U-profile, shieldable: Front panel, U-profile	Front panel, U-profile, shieldable: Textile EMC gasket, PU 10 pieces	Front panel, U-profile, shieldable: Textile EMC gasket, PU 100 pieces	Front panel unshielded
		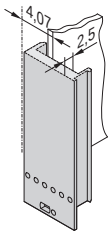 04608130	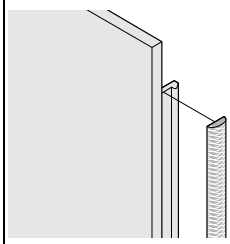 bga45760		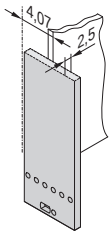 04608131
		Al extrusion, front anodised, rear conductive, alignment pin pressed-in, stainless steel	always fixed laterally on the front panel, in the groove of the profile, textile gasket, core: foam, sleeve: textile cladding with CuNi coating, UL 94 V-0, temperature range -40 ... 70 °C		front panel, Al 2.5 mm; front anodised; rear iridescent green chromated
		1 piece (SPQ 5)[1)]	**PU 10 pieces**	**PU 100 pieces**	**1 piece (SPQ 5)[1)]**
		3 U Height			
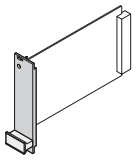 04608126	3	30849-086	21101-853	21101-854	30847-602
	4	30849-087			30847-603
	5	30849-088			30847-604
	6	30849-089			30847-605
	7	30849-090			30847-606
	8	30849-091			30847-607
	10	30849-092			30847-608
	12	30849-093			30847-609
		6 U Height			
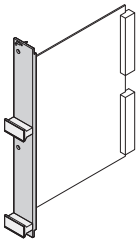 04608127	3	30849-097	21101-855	21101-856	30847-625
	4	30849-098			30847-626
	5	30849-099			30847-627
	6	30849-100			30847-628
	7	30849-101			–
	8	30849-102			30847-630
	10	30849-103			30847-631
	12	30849-104			–
Dimensions see page		7.58			7.58

1) SPQ (standard pack quantity): Part number includes 1 piece, but delivery is exclusively made in standard pack quantity (SPQ); please order at least the SPQ quantity or a multiple

Part no. includes one packing unit (PU); delivery is exclusively made in PU

Order Information

		Plastic handle in trapeziform			Al profile handle		
		Trapeziform handle black	Trapeziform handle grey	Fixing clip	Handle	Fixing part for Al profile handle	Square nut
					item 20	item 21	item 22
		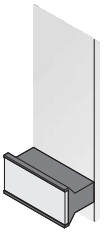 04608132	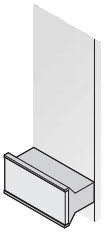 04608133	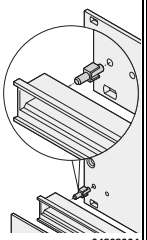 04808064	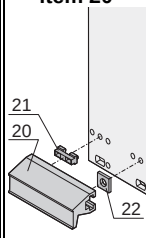 04608134	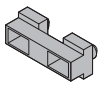 04608135	 06707050
		handle: PPE, UL 94 V-1; identification plate: Al, 1.5 mm, anodised, cut edges plain; please order clip separately; required quantity: 1 handle for 3 U, 2 handles for 6 U		clip, PPE, UL 94 V-0, black, mounting aid from 5 HP to 42 HP	Al extrusion, anodised; fixing part, POM, black; square nut, St, nickel-plated; at length of 1000 mm only Al extrusion	fixing part, POM, black	DIN 562, M2.5, St, nickel-plated
	Width HP	1 piece (SPQ 5)[1]	1 piece (SPQ 5)[1]	PU 100 pieces	1 piece (SPQ 10)[1]	PU 100 pieces	PU 100 pieces
		3 / 6 U Height					
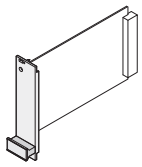 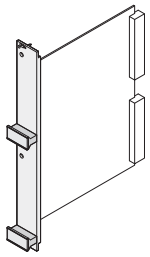 04608128 04608129	3	20809-396	20809-294		20809-281		
	4	20809-397	20809-295		20809-282		
	5	20808-080	20808-003		20809-283		
	6	20808-081	20808-060		20809-284		
	7	20808-082	20808-061		20809-285		
	8	20808-083	20808-062		20809-286		
	9	20808-084	20808-063		20809-287		
	10	20808-085	20808-004	21101-239	20809-288	–	–
	12	20808-086	20808-064		20809-289		
	14	20808-087	20808-065		20809-290		
	21	20808-088	20808-066		20809-291		
	28	20808-089	20808-067		20809-292		
	40	20808-090	20808-009		–		
	42	20808-091	20808-068		20809-293		
	61	20808-092	20808-012		–		
	1000 mm	–	–	–	30809-428	21100-476	21100-359
Fixing material see page		7.57 Item 15, 16, 17					
Dimensions see page		7.57	7.57		7.59	7.59	7.59

1) SPQ (standard pack quantity): Part number includes 1 piece, but delivery is exclusively made in standard pack quantity (SPQ); lease order at least the SPQ quantity or a multiple

Part no. includes one packing unit (PU); delivery is exclusively made in PU

Individual components — PCB bracket for static trapeziform handle

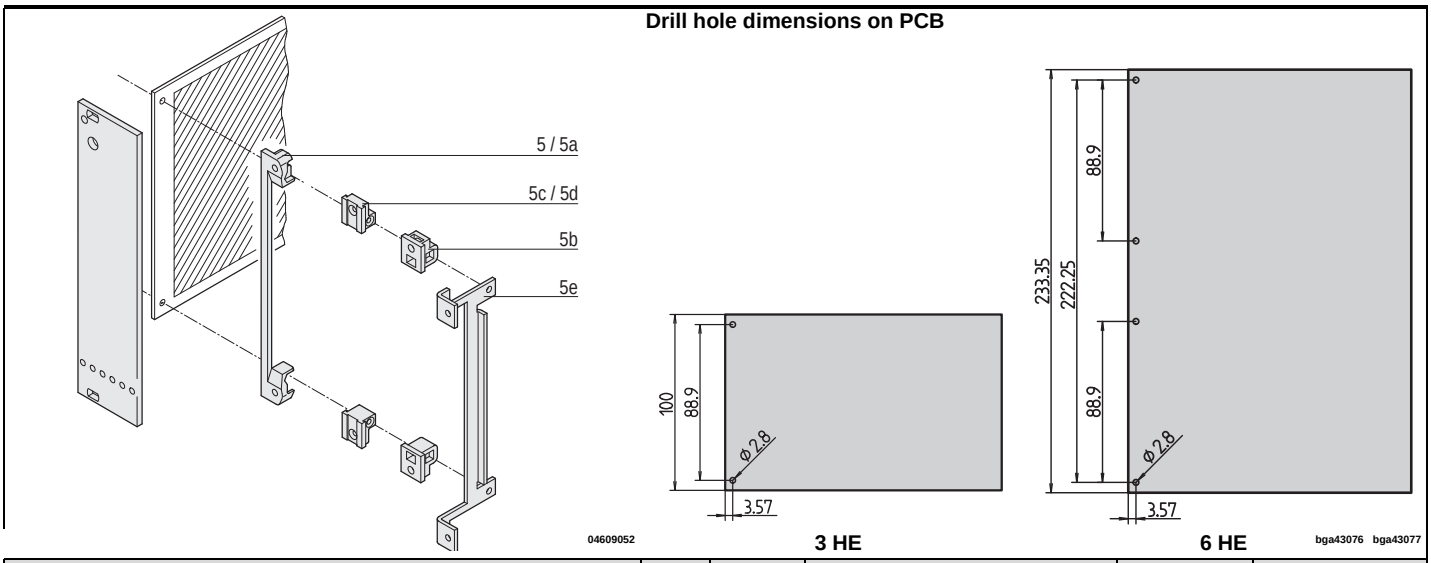

	Item		Required Qty 3 U	Required Qty 6 U	Qty/PU	Part no.
PCB bracket 4 clearance holes for front panel/PCB fixing, 4 recesses for hexagon nuts; PBT, UL 94 V-0, red	5	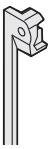	1	2	1 piece (SPQ 10)[1)]	60807-011
PCB bracket 4 threads M2.5 for front panel/PCB fixing, PBT, UL 94 V-0, grey, 1 piece	5a	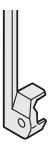	1	2	1 piece (SPQ 10)[1)]	60807-211
PCB bracket Clearance hole for front panel fixing, with recess for hexagon nut, drill hole for self-tapping screw for PCB fixing, PBT, UL 94 V-0, grey, 1 piece	5b		2	4	1 piece (SPQ 10)[1)]	60807-183
PCB bracket 2 threads M2.5 for front panel/PCB fixing, die-cast zinc, 1 piece	5c		2	4	1 piece (SPQ 10)[1)]	60807-181
PCB bracket Thread M2.5 for front panel fixing, clearance hole for PCB fixing, die-cast zinc, 1 piece	5d		2	4	1 piece (SPQ 10)[1)]	60807-203
PCB bracket 4 M2.5 threads for fixing front panel/PCB for recessed PCB mounting (20 mm), mounting depth 192.24 mm, St, zinc-plated; not for europacPRO, multipacPRO, ratiopacPRO, propacPRO or compacPRO, 1 piece	5e	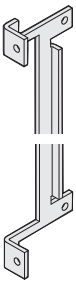	1	2	1 piece (SPQ 10)[1)]	30808-871

1) SPQ (standard pack quantity): Part number includes 1 piece, but delivery is exclusively made in standard pack quantity (SPQ); please order at least the SPQ quantity or a multiple

Individual components — Fixing material for static trapeziform handle

3 U

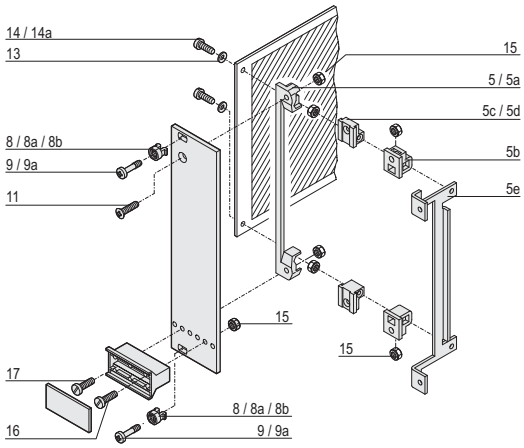

6 U

top

bottom

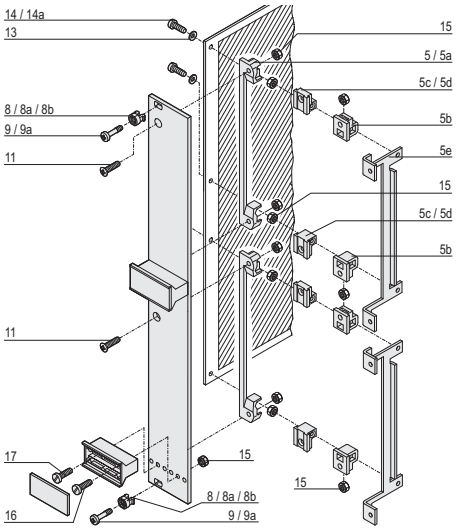

	Item		Required Qty 3 U < 8 HP	3 U ≥ 8 HP	6 U < 8 HP	6 U ≥ 8 HP	Qty/PU	Part no.
Plastic sleeve, for form hole 5.9 x 3.3 PA, UL 90 V-2, grey	8	aza45933	2	4	2	4	100	21100-464
Metal sleeve, for form hole 5.9 x 3.3, press-in Stainless steal	8	aza45934	2	4	2	4	100	21100-662
Metal sleeve, for form hole 5.9 x 3.3, to press-in Nickel-plated brass	8a	aza45934	2	4	2	4	100	21100-660
Pozidrive/slotted collar screw M2.5 × 11, St, nickel-plated not for europacPRO and cases AZA4658	9	AZA46586	2	4	2	4	100	21100-748
Pozidrive/slotted collar screw M2.5 × 12.3, St, nickel-plated AZA4658	9a	AZA46586	2	4	2	4	100	21101-101
Raised Pozidrive countersunk screw M2.5 × 8, St, nickel-plated	11	06702056	1	1	2	2	100	21100-429
Washer 2.7 DIN 125, St, nickel-plated, 100 pieces	13	AZA46586	2	2	4	4	100	21100-721
Pozidrive panhead screw M2.5 × 8, nickel-plated steel if using item 13	14	06702057	2	2	4	4	100	21101-069
Panhead screw, self-tapping 2.5 x 8, St, zinc-plated for items 5 and 5b	14a	06702057	1	1	–	–	100	21100-710
Hexagon nut M2.5, nickel-plated steel for items 5 and 5b — 5 / 5b	15	aza43239	4 / 2	4 / 2	8 / 4	8 / 4	100	21100-144
Pozidrive panhead screw M2.5 × 12, nickel-plated steel	16	06702057	1	1	2	2	100	21101-221
Pozidrive panhead screw M2.5 × 16, nickel-plated steel	17	06702057	1	1	2	2	100	21101-222

1) SPQ (standard pack quantity): Part number includes 1 piece, but delivery is exclusively made in standard pack quantity (SPQ); please order at least the SPQ quantity or a multiple

Plug-in units – for IEC 60297, trapeziform

Dimensions Front panels, U profile, shieldable for static trapeziform handle

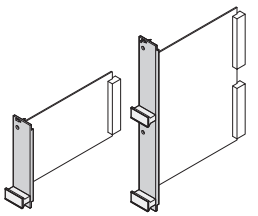

04608126 04608127

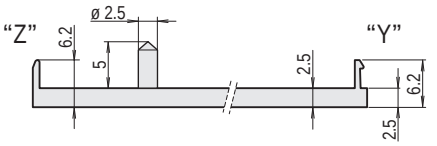

04608111

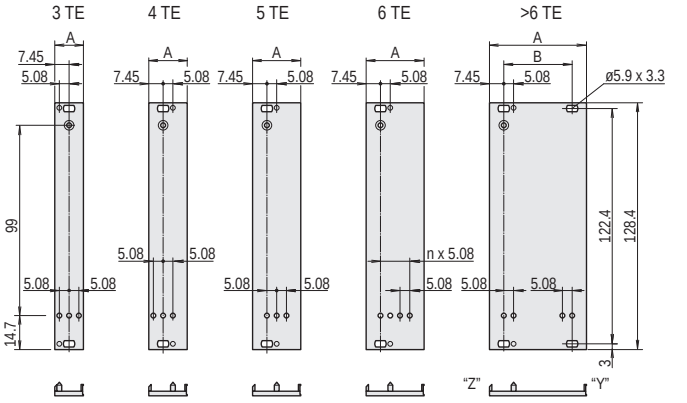

04603064

3 U

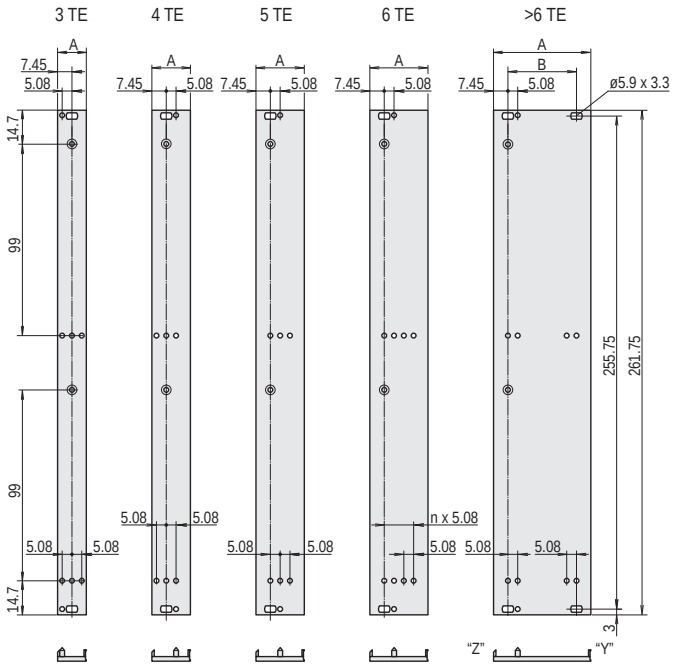

04608110

6 U

Dimensions table

Width HP	A mm	B mm
3	14.90	-
4	19.98	-
5	25.06	-
6	30.14	-
7	35.22	-
8	40.30	25.40
10	50.46	35.56
12	60.62	45.72

Dimensions Front panels for static trapeziform handle

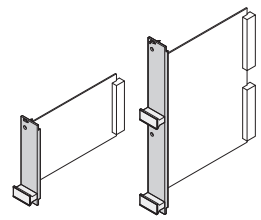

04608126 04608127

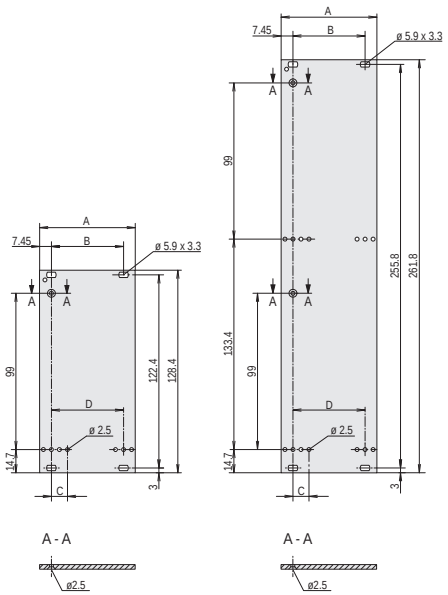

04603053

3 U 6 U

Dimensions table

Width HP	A mm	B mm	C mm	D mm
3	14.90	-	-	-
4	19.98	-	-	-
5	25.06	-	10.16	-
6	30.14	-	-	15.24
7	35.22	-	-	20.32
8	40.30	25.40	-	25.40
10	50.46	35.56	-	35.56
12	60.62	45.72	-	45.72

Part number in bold face type: ready for despatch within 2 working days
Part number in normal type: ready for despatch within 10 working days

Plug-in units – for IEC 60297, trapeziform

Dimensions Static plastic handles, trapeziform

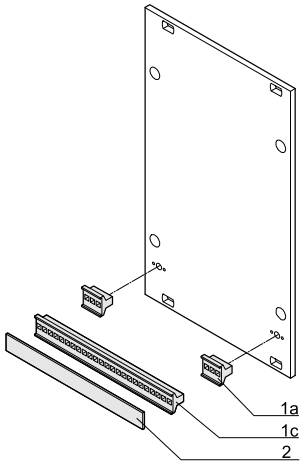

BGA46447

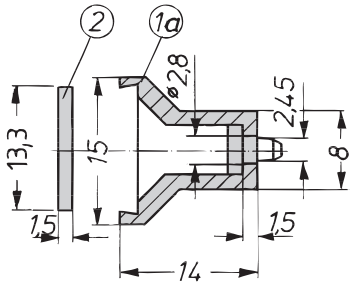

A4--328a

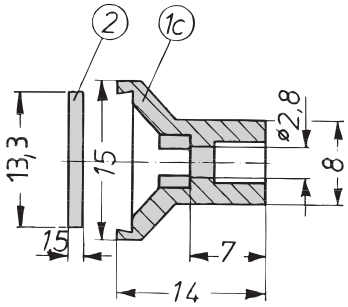

A4--328c

Dimensions table

Item	Width	Width
	HP	mm
1a	3	13.8
1a	4	18.9
1c	5	24.0
1c	6	29.0
1c	7	34.1
1c	8	39.2
1c	9	44.3
1c	10	49.4
1c	12	59.6
1c	14	69.7
1c	21	105.2
1c	28	140.8
1c	40	201.8
1c	42	212.0
1c	61	308.5

Dimensions Aluminium extrusion handles

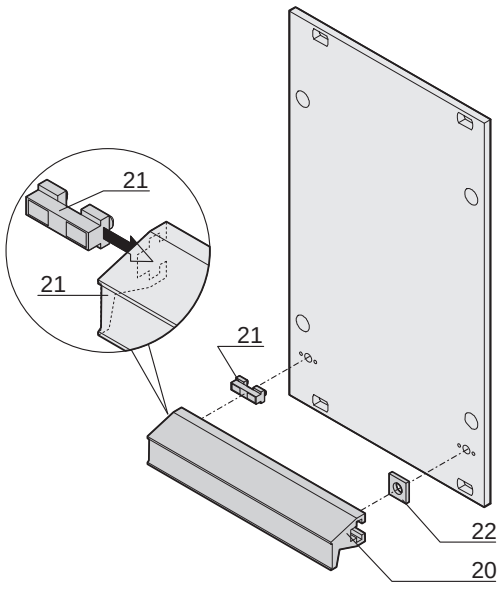

04602069

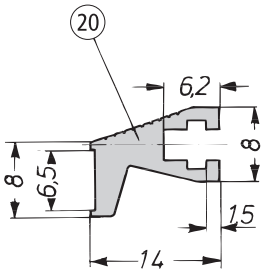

A4-328d

Dimensions table

Item	Width	Width
20	HP	mm
20	3	13.8
20	4	18.9
20	5	24.0
20	6	29.0
20	7	34.1
20	8	39.2
20	9	44.3
20	10	49.4
20	12	59.6
20	14	69.7
20	21	105.2
20	28	140.8
20	40	201.8
20	42	212.0
20	-	1000

Plug-in units – with mechanical shielding

Plug-in unit with mechanical shielding, 3 U kits



04694001

- Mechanical protection of sub-assembly
- Earthing of shielding panels possible by Faston connectors 6.3 × 0.6 mm
- For euroboards 100 × 160 mm

Handles without extraction function



04692003

Handles with extraction function



04692005

3 U kit, shielding component side, handles with/without extraction function

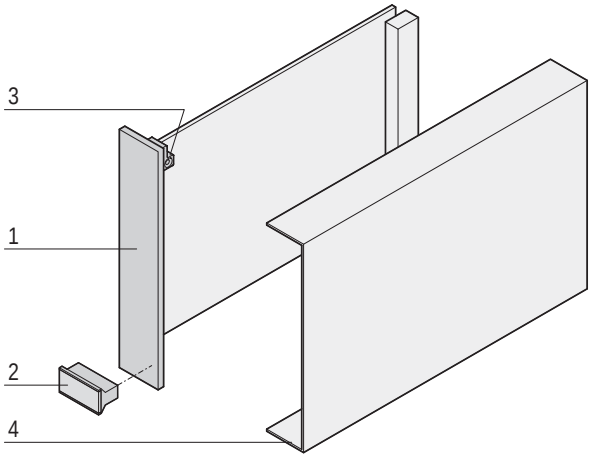

04602077

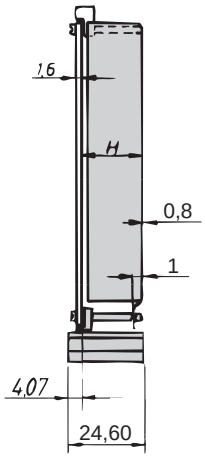

a4-237

- Usable connectors in accordance with EN 60603 (DIN 41612): Construction type B, C, D, F, H, R;

Delivery comprises (kit)

Item	Qty	Description
1	1	Front panel, Al, 2.5 mm, front: anodised, rear: irisdescent green chromated
2	1	Trapeziform handle, PPE, UL 94 V-1, grey
3	1	Board support, PBT, UL 94 V-0, red
5	1	Assembly kit (also for shielding panels)

Order Information

Width	H	Plug-in unit without extractionfunction	Plug-in unit with extractionfunction
HP	mm	Part no.	Part no.
6	24.60	20809-502	20809-516
Item 4 Shielding panel component side for 7 HP front panel width, stainless steel, 0.8 mm, 1 piece		20809-371	20809-371

Note

- Keying/coding with separate keying/coding strip is not possible
- Please order shielding plates separately

For further information www.schroff.biz/oneclick
oneClick search code = Part no.

3 U kits, both sides shielded (solder/component side), handles with/without extraction function

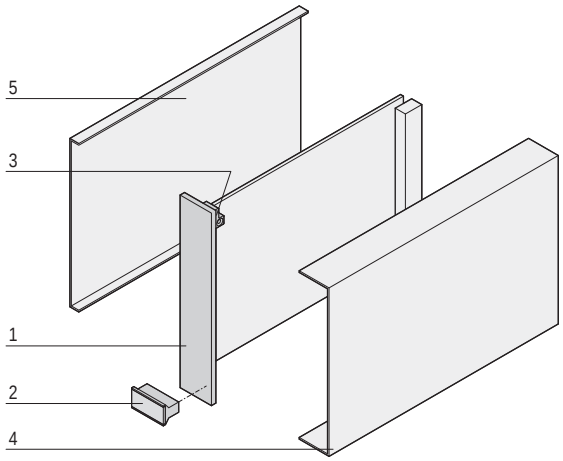

04602078

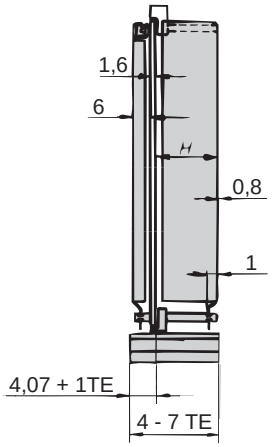

a4-236a

- Usable connectors in accordance with EN 60603 (DIN 41612): Construction type B, C, D, F, H, R;

Delivery comprises

Item	Qty	Description
1	1	Front panel, Al, 2.5 mm, front: anodised, rear: irisdescent green chromated
2	1	Trapeziform handle, without extraction function, PPE, UL 94 V-1, grey
3	2	Board support, PBT, UL 94 V-0, red
6	1	Assembly kit (also for shielding panels)

Order Information

Width	H	Plug-in unit without extraction function	Plug-in unit with extraction function
HP	mm	Part no.	Part no.
4	9.60	20809-495	–
5	14.70	20809-496	20809-511
6	19.80	20809-497	20809-512
7	24.90	20809-498	20809-513
Item 4 Shielding panel component side for 4 HP front panel width, stainless steel, 0.8 mm, 1 piece		20809-329	20809-329
Item 4 Shielding panel component side or 5 HP front panel width, stainless steel, 0.8 mm, 1 piece		20809-357	20809-357
Item 4 Shielding panel component side for 6 HP front panel width, stainless steel, 0.8 mm, 1 piece		20809-359	20809-359
Item 4 Shielding panel component side for 7 HP front panel width, stainless steel, 0.8 mm, 1 piece		20809-371	20809-371
Item 5 Shielding panel on solder side, stainless steel, 0.8 mm, 1 piece		30809-571	30809-571

Note

- Keying/coding with separate keying/coding strip is not possible
- Where the shielding plate is used for the solder side, the PCB is offset to the right by 1 HP

For further information www.schroff.biz/oneclick
oneClick search code = Part no.

PCB cover for euroboards

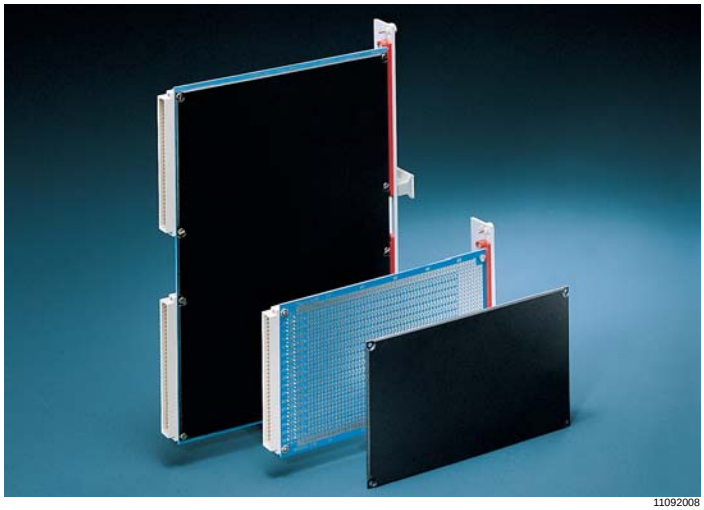

11092008

- Mechanical protection of the solder side

Order Information

Description	Qty	Part no.
PCB cover (thickness 0.9 mm) for euroboards (100 x 160 mm), PBT, black, max. operating temperature without permanent deformation 55 °C	1 piece (SPQ 10)	61000-007
PCB cover (thickness 0.9 mm) with similar temperature expansion coefficients to FR4 PCB; for euroboards (100 x 160 mm), LCP, UL 94 V-0, white, max. operating temperature without permanent deformation 85 °C	1 piece (SPQ 10)	61000-177
PCB cover for double euroboards (233.35 x 160 mm), PP, UL 94 V-0, black	1 piece (SPQ 10)	61000-012
Slotted flathead screw M2.5 × 6, height of head 1.2 mm, PU 100 pieces		21102-007
Slotted flathead screw M2.5 × 12, height of head 1.2 mm, PU 100 pieces		21102-008

SPQ (standard pack quantity): Part number includes 1 piece, but delivery is exclusively made in standard pack quantity: please order at least 10 pieses of PCB covers or a multiple

For further information www.schroff.biz/oneclick
oneClick search code = Part no.

For PCBs 100 × 160 mm

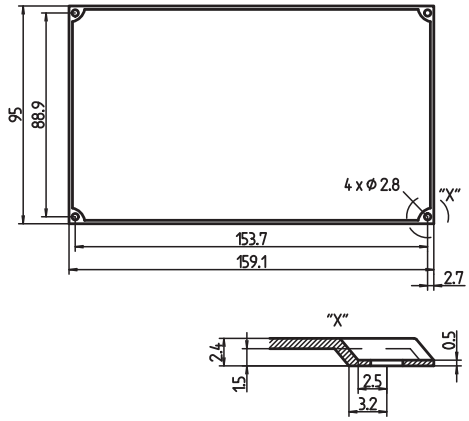

LKA40520

For PCBs 233.35 × 160 mm

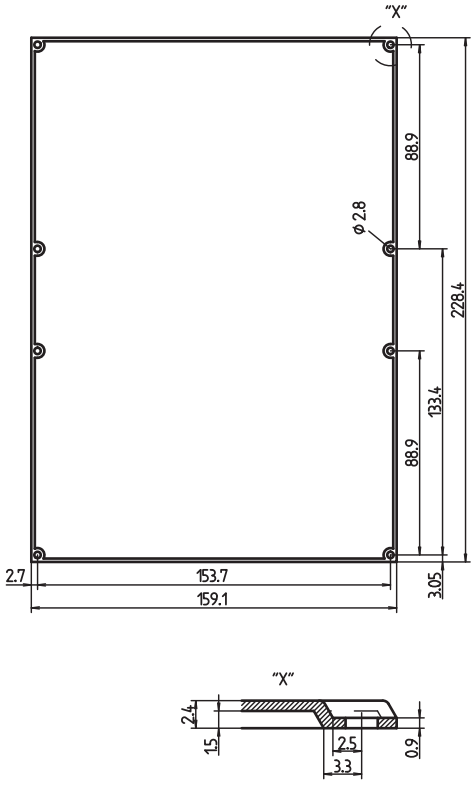

LKA30451

Part number in bold face type: ready for despatch within 2 working days
Part number in normal type: ready for despatch within 10 working days

PCB cover for CompactPCI

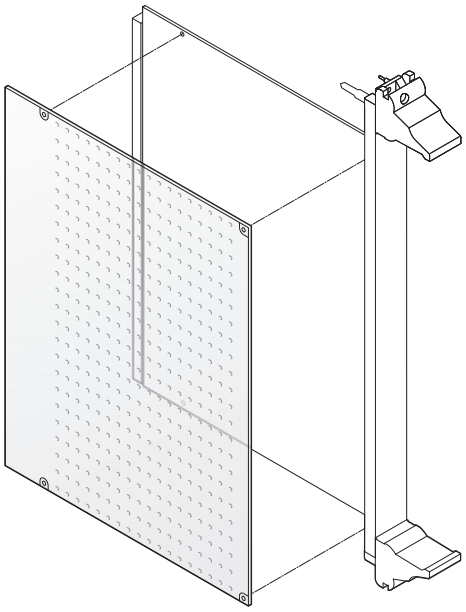

12303051

- Mechanical protection of solder side
- Cover is perforated for better cooling of components

Delivery comprises

Item	Qty	Description
1	1	Cover, plastic, 0.5 mm, antistatic, perforated, UL 94 V-0; max. operating temperature 65 °C, max. continuous operating temperature 55 °C

Order Information

Height U	Depth mm	Part no.
6	80	24579-039
3	160	24579-037
6	160	24579-038
Fixing clips PU 100 pieces		21101-914

Note

- Fixing clips are required for mounting the perforated covers; please order separately

For further information www.schroff.biz/oneclick
oneClick search code = Part no.

Overview 0
Cabinets 1
Wall mounted cases 2
Accessories for cabinets and wall mounted cases 3
Climate control 4
Desk-top cases 5
Subracks/ 19" chassis . . . 6
Front panels, plug-in units . . 7
Systems 8
Power supply units 9
Backplanes . . 10
Connectors, front panel component system 11
Appendix 12

Frame type plug-in units

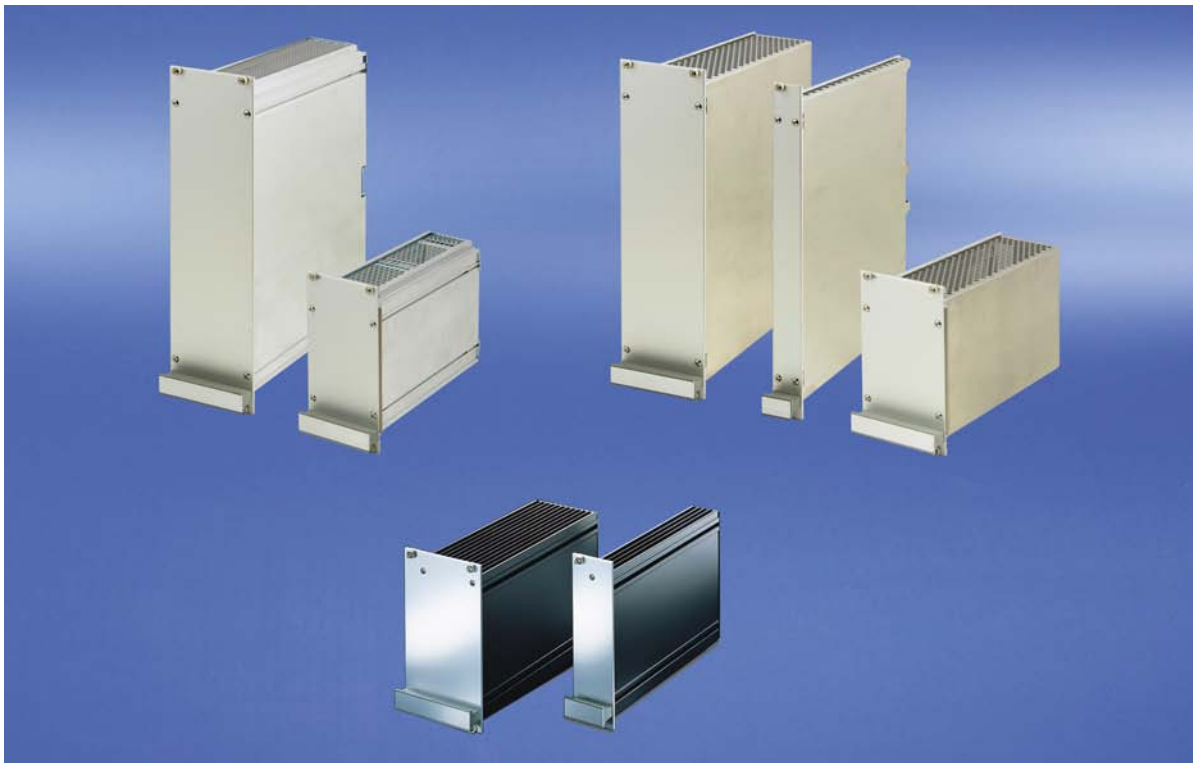

04807002

19" modules are mechanical components that serve to carry one or more circuit boards. The boards housed in a module are thus combined into a larger electronic function unit that is self-contained and testable. Mechanical dimensions conform to IEC 60297-3-101 / IEEE 1101.1/11 standards, i.e. the so-called 19" standard. These function units are integrated into the subrack or case; their dimensions likewise form a component of IEC 60297-3-101 / IEEE 1101.1/11.

The dimension obligations of the standard give only little freedom for individual design of frame type plug-in units. The aim is therefore to make optimum use of what freedoms regarding dimensions it does allow, e.g.

- **to maximise the internal space of a plug-in unit and thus create maximum space for electronic components, or**
- **to ensure optimal EMC shielding with minimum loss of mounting space to the shielding components**

Standards

- IEC 60297-3-101 / IEEE 1101.1/11

Product selection kits

Width	5 HP		6 HP		7 HP		8 HP		10 HP		12 HP		14 HP		21 HP		28 HP		42 HP	
Height in U	3	6	3	6	3	6	3	6	3	6	3	6	3	6	3	6	3	6	3	6
Frame-type plug-in units PRO	–	–	–	–	–	–	x	x	x	x	x	x	x	x	x	x	x	x	x	x
Frame type plug-in units PRO with cooling fins	–	–	–	–	–	–	–	–	–	–	x	x	x	x	x	x	–	–	–	–
Frame-type plug-in units PRO with hood	x	x	x	x	x	x	–	–	x	x	x	x	x	x	–	–	–	–	–	–
HF frame-type plug-in units	–	–	–	–	x	–	–	–	x	–	x	–	x	–	x	–	x	–	–	–

Downloads and further important information can be found on the Internet under www.schroff.biz

Frame-type plug-in units to house printed boards

- **For PCBs in euroboard format**
- **Kits or configuration from single components**
- **Front panels: unshielded or EMC shielded**



04808008

Frame-type plug-in units PRO

- Kit or configuration from single components in 3 U and 6 U, 8 ... 42 HP
- Shielded and unshielded versions
- Side panel with/without cooling fins
- For one or several PCBs or one or several connectors
- Various possibilities for combining the individual components



04808009

Plug-in units PRO with hood

- Kit in 3 U and 6 U, 5 ... 14 HP
- Shielded and unshielded versions
- For one PCB with one connector

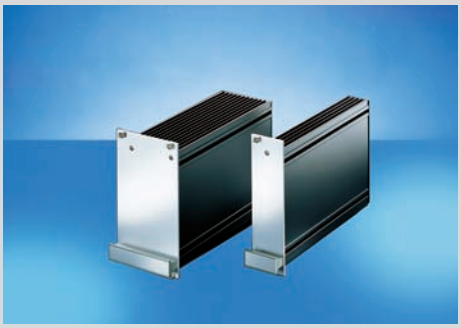

04892005

HF frame-type plug-in units

- Kit or configuration from single components in 3 U, 7 ... 28 HP
- For shielding against high-frequency radiation
- Tube with cooling fins, in extruded aluminium
- For one or more PCBs, one or more connectors



30407004

ServicePLUS from page 7.74

e.g. individual configuration and assembly
e.g. modification (special colours)
e.g. customised solutions with modified frame-type plug-in units (special sizes)

www.schroff.biz/ServicePLUS

FRONT PANEL EXPRESS

Overview 7.64

Introduction: Product features, product comparison ... 7.66

Frame type plug-in units PRO

Frame type plug-in units PRO, shielded/ unshielded 7.68

ServicePLUS ... 7.74

ServicePLUS configuration ... 7.75

Frame-type plug-in units PRO with hood, unshielded 7.86

HF plug-in units

Kits 3 U 7.90

ServicePLUS configuration ... 7.91

Accessories for plug-in units see page 7.52

Frame type plug-in units PRO – Introduction

The new generation

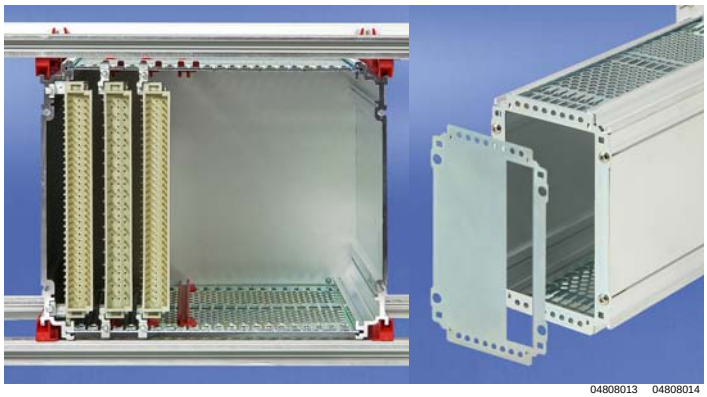

04808013 04808014

Rear view: frame type plug-in unit mounted in subrack

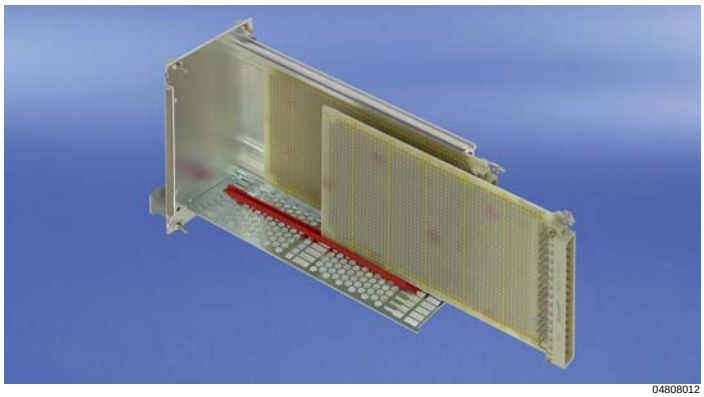

04808012

Board for slot 1 fixes to the side panel; further boards are fixed with guide rails



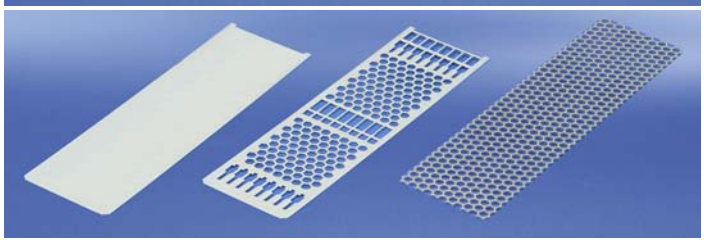

04808011 04808016

Sliding cover plates

The frame type plug-in units conform to IEC 60297-3-101. They serve to house standardized PCBs and bulky components. Because of the standardized assembly dimensions the frame type plug-in units can be mounted on guide rails, to be pushed into the subrack, in any order and using any plug-in unit.
The robust Al extrusion construction is especially suited for heavy components and the rough handling as "Field Replaceable Unit".

Details

The EMC version of the front panel was improved for frequencies over 1 GHz by using a conductive textile gasket and a robust U-shaped front panel

Push-in cover plates for quick fitting

Handles to be bolted-on from the front, easy mounting

Optimised air flow rate thanks to slender extruded side panels and large perforation areas in the cover plates, a perforation degree of up to 65 % is possible

3 cover plate versions (solid, perforated, perforated for guide rail mounting)

Width of frame-type plug-in units from 8 HP

To achieve a higher airflow rate, exceptionally slender guide rails are used to fix the boards

From slot 2 guide rails can be positioned in HP grid

Easy fixing of the boards in the frame-type plug-in units;
only 2 x 1 screws per board are needed to fix the boards

3 rear panel variants (solid, for one DIN connector, for multiple DIN connectors)

The flat rear panel enables simple reworking (e.g. punching);
the rear panel can be removed without removing the PCBs

For better EMC contacting between rear panel and cover plate and to increase the stability of broad frame-type plug-in units, a rear panel retainer is available

Use of Torx screws for secure machine mounting

Note:
Frame type plug-in units cannot be combined with guide rails for CompactPCI or VME64x applications (width 4 HP)

Frame type plug-in units PRO – Introduction

Comparison:
Frame-type plug-in units PRO/Frame-type plug-in units PRO with hood

Frame-type plug-in units PRO

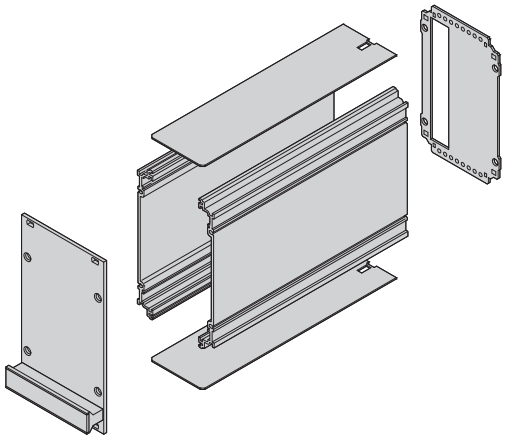

04808125

Frame-type plug-in units PRO with hood (shielded)

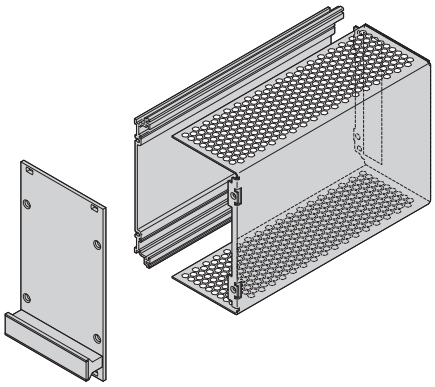

04808115

Frame-type plug-in units PRO	Frame-type plug-in units PRO with hood (shielded)
For one or multiple PCBs	Only for one PCB
Modular, at least 6 components (front panel, 2 side panels, 2 cover plates, rear panel)	Only 3 components (front panel, left hand side panel, hood with integrated rear panel)
Identical front panel and front handle	Identical front panel and front handle
Identical left hand side panel (Al extrusion)	Identical left hand side panel (Al extrusion)
Side panel on right hand side (Al extrusion)	Hood on right hand side (Al sheet)
Separate rear panel	Hood includes rear panel
Widths from 8 HP to 42 HP	Widths from 5 HP to 14 HP
Guiding in subrack/case with 4 guide rails; left and right side panels	Guiding in subrack/case with 2 guide rails; left side panel
3 rear panel variants (for one DIN connector, for multiple DIN connectors, rear panel without cut-out)	1 rear panel variant (for one DIN connector)

Frame type plug-in units PRO, 3 U kits, front panel shielded (textile gasket)


04811007

Illustration shows 12 HP width, side panel depth 167 mm

ServicePLUS see page 7.74

- Extruded side panels with groove to rigth and left, to insert a PCB (board position in accordance with standard in left side panel only)
- 2 board depths: 160 mm and 220 mm
- 2 cover plate versions
  – with perforation, for guide rails (5a, airflow rate approx. 60 %); please order guide rails separately
  – Without perforation (5b)
- 2 rear panel versions
  – With cut-out for one connector (3a, in accordance with EN 60603-2, DIN 41612)
  – With cut-out for multiple connectors (3b, in accordance with EN 60603-2, DIN 41612)

Delivery comprises (Kit)

Item	Qty	Description
1	1	Front panel, U profile anodised, rear conductive, alignment pin pressed-in
2	1	Handle, grey, PPE, UL 94 V-1
3a	1	Rear panel, St, zinc-plated, 1.5 mm, with cut-out for one connector, incl. PCB fixing (slot 1)
3b	1	Rear panel, St, zinc-plated, 1.5 mm, with cut-out for multiple connectors, incl. PCB fixing (slot 1 and slot 2), incl. 2 guide rails
3c	2	rear panel fastener
4	2	Side panel, Al extrusion, colourless passivated, with groove for one PCB
5a	2	Cover plate, St, zinc-plated, 1.0 mm, with perforation
5b	2	Cover plate, St, zinc-plated, 1.0 mm, without perforation
6	1	EMC sealing (textile)
7	1	Assembly kit

Order Information

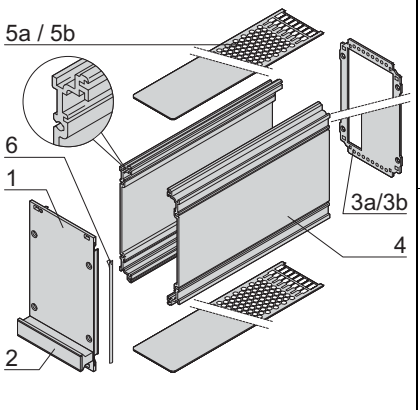

04808050

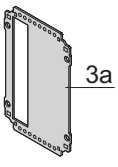

04808052

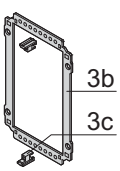

04808053

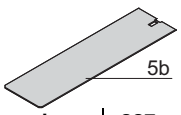

04808055

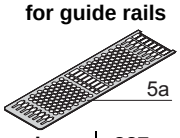

04808054

Rear panel U	Rear panel HP	Height / Width	Cover plate without perforation, 167 mm deep, Part no.	Cover plate without perforation, 227 mm deep, Part no.	Cover plate with perforation, for guide rails, 167 mm deep, Part no.	Cover plate with perforation, for guide rails, 227 mm deep, Part no.
3	8		24813-408	24813-458	24813-208	24813-258
3	10		24813-410	24813-460	24813-210	24813-260
3	12		24813-412	24813-462	24813-212	24813-262
3	14		24813-414	24813-464	24813-214	24813-264
3	21		24813-421	24813-471	24813-221	24813-271
3	28		24813-428	24813-478	24813-228	24813-278
3	42		24813-442	24813-492	24813-242	24813-292
3	8		–	–	24813-308	24813-358
3	10		–	–	24813-310	24813-360
3	12		–	–	24813-312	24813-362
3	14		–	–	24813-314	24813-364
3	21		–	–	24813-321	24813-371
3	28		–	–	24813-328	24813-378
3	42		–	–	24813-342	24813-392

- Description of individual components, guide rails, dimension drawings, other combinations cover plates/rear panels etc. see from page 7.75

Part number in bold face type: ready for despatch within 2 working days
Part number in normal type: ready for despatch within 10 working days

Frame type plug-in units PRO, 6 U kits, front panel shielded (textile gasket)



Illustration shows 12 HP width, side panel depth 167 mm

ServicePLUS see page 7.74

- Extruded side panels with groove to rigth and left, to insert a PCB (board position in accordance with standard in left side panel only)
- 2 board depths: 160 mm and 220 mm
- 2 cover plate versions
  - With perforation, for guide rails (5a, airflow rate approx. 60 %),
  - please order guide rails separately
  - Without perforation (5b)
- 2 rear panel versions
  - With cut-out for one connector (3a; in accordance with EN 60603-2, DIN 41612)
  - With cut-out for multiple connectors (3b; in accordance with EN 60603-2, DIN 41612)
  - 6 U has cut-outs for connectors at top and bottom

Delivery comprises (Kit)

Item	Qty	Description
1	1	Front panel, U profile anodised, rear conductive, alignment pin pressed-in
2	1	Handle, grey, PPE, UL 94 V-1
3a	1	Rear panel, St, zinc-plated, 1.5 mm, with cut-out for one connector, incl. PCB fixing (slot 1)
3b	1	Rear panel, St, zinc-plated, 1.5 mm, with cut-out for multiple connectors, incl. PCB fixing (slot 1 and slot 2), incl. 2 guide rails
3c	2	rear panel fastener
4	2	Side panel, Al extrusion, colourless passivated, with groove for one PCB
5a	2	Cover plate, St, zinc-plated, 1.0 mm, with perforation
5b	2	Cover plate, St, zinc-plated, 1.0 mm, without perforation
6	1	EMC sealing (textile)
7	1	Assembly kit

Order Information

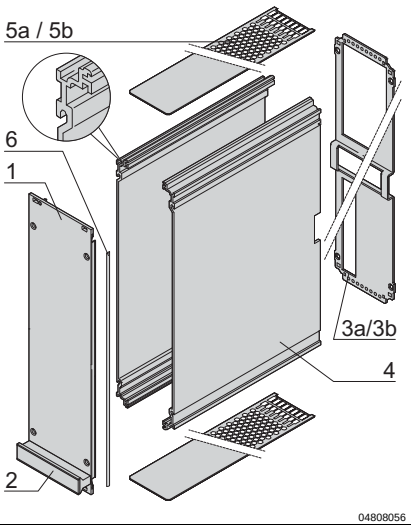

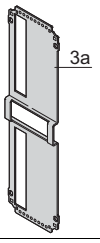

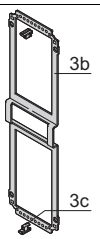

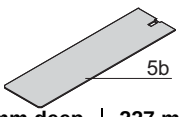

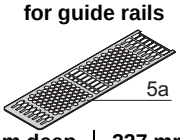

Rear panel	Height	Width	Cover plate without perforation		Cover plate with perforation, for guide rails	
			167 mm deep	227 mm deep	167 mm deep	227 mm deep
	U	HP	Part no.	Part no.	Part no.	Part no.
3a	6	8	24813-908	24813-958	24813-708	24813-758
	6	10	24813-910	24813-960	24813-710	24813-760
	6	12	24813-912	24813-962	24813-712	24813-762
	6	14	24813-914	24813-964	24813-714	24813-764
	6	21	24813-921	24813-971	24813-721	24813-771
	6	28	24813-928	24813-978	24813-728	24813-778
	6	42	24813-942	24813-992	24813-742	24813-792
3b	6	8	–	–	24813-808	24813-858
	6	10	–	–	24813-810	24813-860
	6	12	–	–	24813-812	24813-862
	6	14	–	–	24813-814	24813-864
	6	21	–	–	24813-821	24813-871
	6	28	–	–	24813-828	24813-878
3c	6	42	–	–	24813-842	24813-892

- Description of individual components, guide rails, dimension drawings, other combinations cover plates/rear panels etc. see from page 7.75

Frame-type plug-in units PRO, 3 U kits, front panel unshielded



Illustration shows 12 HP width, side panel depth 167 mm

ServicePLUS see page 7.74

- Extruded side panels with groove to rigth and left, to insert a PCB (board position in accordance with standard in left side panel only)
- 2 board depths: 160 mm and 220 mm
- 2 cover plate versions
  – with perforation, for guide rails (5a, airflow approx. 60 %); please order guide rails separately
  – Without perforation (5b)
- 2 rear panel versions
  – With cut-out for one connector (3a, in accordance with EN 60603-2, DIN 41612)
  – With cut-out for multiple connectors (3b, in accordance with EN 60603-2, DIN 41612)

Delivery comprises (Kit)

Item	Qty	Description
1	1	Front panel, Al, 2.5 mm, anodised, cut edges plain
2	1	Handle, grey, PPE, UL 94 V-1
3a	1	Rear panel, St, zinc-plated, 1.5 mm, with cut-out for one connector, incl. PCB fixing (slot 1)
3b	1	Rear panel, St, zinc-plated, 1.5 mm, with cut-out for multiple connectors, incl. PCB fixing (slot 1 and slot 2), incl. 2 guide rails
3c	2	rear panel fastener
4	2	Side panel, Al extrusion, colourless passivated, with groove for one PCB
5a	2	Cover plate, St, zinc-plated, 1.0 mm, with perforation
5b	2	Cover plate, St, zinc-plated, 1.0 mm, without perforation
6	1	Assembly kit

Order Information

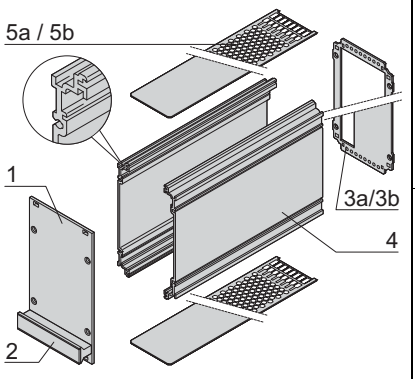

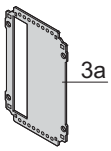

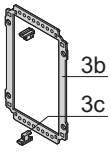

Rear panel	Height U	Width HP	Cover plate without perforation, 167 mm deep Part no.	Cover plate without perforation, 227 mm deep Part no.	Cover plate with perforation, for guide rails, 167 mm deep Part no.	Cover plate with perforation, for guide rails, 227 mm deep Part no.
	3	8	24812-408	24812-458	24812-208	24812-258
	3	10	24812-410	24812-460	24812-210	24812-260
	3	12	24812-412	24812-462	24812-212	24812-262
	3	14	24812-414	24812-464	24812-214	24812-264
	3	21	24812-421	24812-471	24812-221	24812-271
	3	28	24812-428	24812-478	24812-228	24812-278
	3	42	24812-442	24812-492	24812-242	24812-292
	3	8	–	–	24812-308	24812-358
	3	10	–	–	24812-310	24812-360
	3	12	–	–	24812-312	24812-362
	3	14	–	–	24812-314	24812-364
	3	21	–	–	24812-321	24812-371
	3	28	–	–	24812-328	24812-378
	3	42	–	–	24812-342	24812-392

- Description of individual components, guide rails, dimension drawings, other combinations cover plates/rear panels etc. see from page 7.75

Part number in bold face type: ready for despatch within 2 working days
Part number in normal type: ready for despatch within 10 working days

Frame type plug-in units PRO, 6 U kits, front panel unshielded



Illustration shows 12 HP width, side panel depth 167 mm

ServicePLUS see page 7.74

- Extruded side panels with groove to rigth and left, to insert a PCB (board position in accordance with standard in left side panel only)
- 2 board depths: 160 mm and 220 mm
- 2 cover plate versions
  - with perforation, for guide rails (5a, airflow approx. 60 %); please order guide rails separately
  - Without perforation (5b)
- 2 rear panel versions
  - With cut-out for one connector (3a; in accordance with EN 60603-2, DIN 41612)
  - With cut-out for multiple connectors (3b; in accordance with EN 60603-2, DIN 41612)
  - 6 U has cut-outs for connectors at top and bottom

Delivery comprises (Kit)

Item	Qty	Description
1	1	Front panel, Al, 2.5 mm, anodised, cut edges plain
2	1	Handle, grey, PPE, UL 94 V-1
3a	1	Rear panel, St, zinc-plated, 1.5 mm, with cut-out for one connector, incl. PCB fixing (slot 1)
3b	1	Rear panel, St, zinc-plated, 1.5 mm, with cut-out for multiple connectors, incl. PCB fixing (slot 1 and slot 2), incl. 2 guide rails
3c	2	rear panel fastener
4	2	Side panel, Al extrusion, colourless passivated, with groove for one PCB
5a	2	Cover plate, St, zinc-plated, 1.0 mm, with perforation
5b	2	Cover plate, St, zinc-plated, 1.0 mm, without perforation
6	1	Assembly kit

Order Information

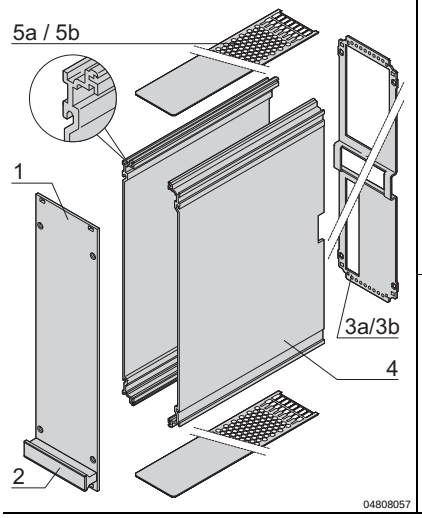

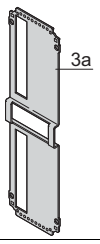

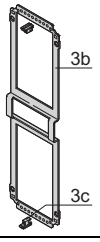

Rear panel	Height	Width	Cover plate without perforation		Cover plate with perforation, for guide rails	
			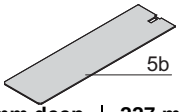		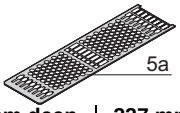	
	U	HP	167 mm deep Part no.	227 mm deep Part no.	167 mm deep Part no.	227 mm deep Part no.
3a	6	8	24812-908	24812-958	24812-708	24812-758
	6	10	24812-910	24812-960	24812-710	24812-760
	6	12	24812-912	24812-962	24812-712	24812-762
	6	14	24812-914	24812-964	24812-714	24812-764
	6	21	24812-921	24812-971	24812-721	24812-771
	6	28	24812-928	24812-978	24812-728	24812-778
	6	42	24812-942	24812-992	24812-742	24812-792
3b	6	8	–	–	24812-808	24812-858
	6	10	–	–	24812-810	24812-860
	6	12	–	–	24812-812	24812-862
	6	14	–	–	24812-814	24812-864
	6	21	–	–	24812-821	24812-871
	6	28	–	–	24812-828	24812-878
3c	6	42	–	–	24812-842	24812-892

- Description of individual components, guide rails, dimension drawings, other combinations cover plates/rear panels etc. see from page 7.75

Frame type plug-in unit PRO kits, side panel with cooling fins, front panel shielded



04812018

Illustration shows 12 HP width, side panel depth 167 mm

- Right side panel with cooling fins to improve heat dissipation; left side panel extrusion with groove to insert a PCB (board position in accordance with standard in left side panel only)
- 2 board depths: 160 mm and 220 mm
- Cover plate without perforation
- With cut-out for one connector in accordance with EN 60603-2, DIN 41612
- With 10 W installed heat dissipation loss the internal temperature falls by approx. 5°C

NEW

Delivery comprises (Kit)

Item	Qty	Description
1	1	Front panel, U profile anodised, rear conductive, alignment pin pressed-in
2	1	Handle, grey, PPE, UL 94 V-1
3	1	Rear panel, St, zinc-plated, 1.5 mm, with cut-out for one connector, incl. PCB fixing (slot)
4a	2	Side panel, left, Al extrusion, clear passivated, with groove for one PCB
4b	2	Side panel, right, Al extrusion, clear passivated, with cooling fins
5	2	Cover plate, St, zinc-plated, 1.0 mm
6	1	EMC sealing (textile)
7	1	Assembly kit

ServicePLUS see page 7.74

Order Information

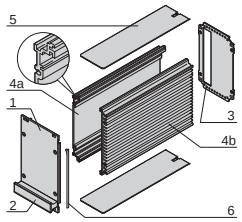

04812058

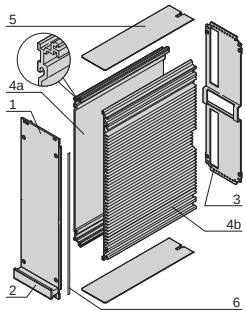

04812060

Height U	Width HP	Depth = 167 mm Part no.	Depth = 227 mm Part no.
3	14	24813-164	–
3	21	24813-171	–
6	14	24813-664	24813-614
6	21	24813-671	24813-621

Note

- Description of individual components, guide rails, dimension drawings, other combinations cover plates/rear panels etc. see from page 7.75

Part number in bold face type: ready for despatch within 2 working days
Part number in normal type: ready for despatch within 10 working days

Frame type plug-in units PRO kits, side panel with cooling fins, front panel unshielded



04812008

Illustration shows 12 HP width, side panel depth 167 mm

- Right side panel with cooling fins to improve heat dissipation; left side panel extrusion with groove for insertion of a PCB (board position in accordance with standard in left side panel only)
- 2 board depths: 160 mm and 220 mm
- Cover plate without perforation
- With cut-out for one connector in accordance with EN 60603-2, DIN 41612
- With 10 W installed heat dissipation loss the internal temperature falls by approx. 5°C

NEW

Delivery comprises (Kit)

Item	Qty	Description
1	1	Front panel, Al, 2.5 mm, anodised, cut edges plain
2	1	Handle, grey, PPE, UL 94 V--1
3	1	Rear panel, St, zinc-plated, 1.5 mm, with cut-out for one connector, incl. PCB fixing (slot 1)
4a	2	Side panel, left, Al extrusion, clear passivated, with groove for one PCB
4b	2	Side panel, right, Al extrusion, clear passivated, with cooling fins
5	2	Cover plate, St, zinc-plated, 1.0 mm
6	1	Assembly kit

ServicePLUS see page 7.74

Order Information

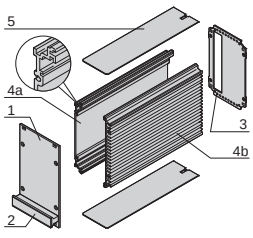

04812059

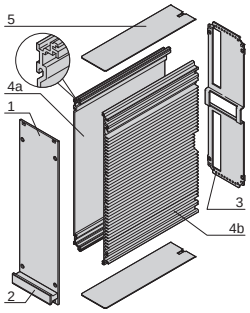

04812061

Height U	Width HP	Depth = 167 mm Part no.	Depth = 227 mm Part no.
3	12	24812-162	–
3	14	24812-164	–
3	21	24812-171	–
6	12	24812-662	24812-612
6	14	24812-664	24812-614
6	21	24812-671	24812-621

Note

- Description of individual components, guide rails, dimension drawings, other combinations cover plates/rear panels etc. see from page 7.75

Frame type plug-in units PRO ServicePLUS

configuration

Components can be varied and combined freely

Simple. Fast. For the product you want.

- Configuration tables for frame type plug-in units PRO from page 7.75
- Configuration tables for HF plug-in units from page 7.90
- Online configuration: **www.schroff.co.uk/configuration**

assembly

Fitting of all mechanical, electrical and electronic components by our specialists

Assembled by professionals. Double benefit!

- Professional and reliable
- Packaged ready for despatch

modification

Custom drillings, cut-outs and special colours for off-the-shelf products

Small changes. Large impact.

- Holes, cut-outs, drill holes, individual colour and printing

solution

Integration and custom developments

Simple. Fast. From one source.

- Special sizes, custom solutions
- Heat dissipation concepts
- EMC solutions

express

Delivery time to customer's request

FRONT PANEL EXPRESS

When fast has to be faster.

- Delivery time for front panels from 2 working days; for frame-type plug-in units from 5 working days

academy

Knowledge transfer and partnership

Knowledge. Sharing. Partnerships.

- Downloadable CAD drawings, test reports, user manual

Individual components — Front panels, front handles

	Front panel	Shieldable front panel, U profile			Trapeziform handle, grey (without extraction function)	
	unshielded	Front panel	Textile EMC gasket		Grey	Black
	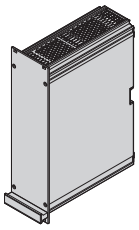 04808124	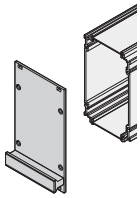 04808060	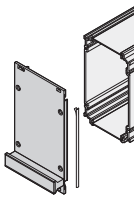 04808061	 04808062	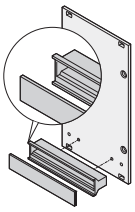 04808063	
Supplied quantity for assembly of 5 frame type plug-in units	Al, 2.5 mm, front anodised, rear iridescent green chromated, cut edges blank	Al extrusion, alignment pin pressed-in, front anodised, rear conductive	always fixed laterally on the front panel, in the groove of the profile, textile gasket, core: foam, sleeve: textile cladding with CuNi coating, UL 94 V-0, temperature range -40 ... 70 °C		handle: PPE, UL 94 V-1; identification plate: Al, 1.5 mm, anodised, cut edges plain; please order clip separately (included in mounting kit for five plug-in units or individual parts) 7.78	
	1 piece (SPQ 5)[1)]	**1 piece (SPQ 5)[1)]**	**PU 10 pieces**	**PU 100 pieces**	**1 piece (SPQ 5)[1)]**	**1 piece (SPQ 5)[1)]**
Width	**3 U Height**					
HP	PCB depth 160 mm					
8	34812-108	34813-108	21101-853	21101-854	20808-062	20808-083
10	34812-110	34813-110			20808-004	20808-085
12	34812-112	34813-112			20808-064	20808-086
14	34812-114	34813-114			20808-065	20808-087
21	34812-121	34813-121			20808-066	20808-088
28	34812-128	34813-128			20808-067	20808-089
42	34812-142	34813-142			20808-068	20808-091
	PCB depth 220 mm					
8	34812-108	34813-108	21101-853	21101-854	20808-062	20808-083
10	34812-110	34813-110			20808-004	20808-085
12	34812-112	34813-112			20808-064	20808-086
14	34812-114	34813-114			20808-065	20808-087
21	34812-121	34813-121			20808-066	20808-088
28	34812-128	34813-128			20808-067	20808-089
42	34812-142	34813-142			20808-068	20808-091
Width	**6 U Height**					
HP	PCB depth 160 mm					
8	34812-608	34813-608	21101-855	21101-856	20808-062	20808-083
10	34812-610	34813-610			20808-004	20808-085
12	34812-612	34813-612			20808-064	20808-086
14	34812-614	34813-614			20808-065	20808-087
21	34812-621	34813-621			20808-066	20808-088
28	34812-628	34813-628			20808-067	20808-089
42	34812-642	34813-642			20808-068	20808-091
	PCB depth 220 mm					
8	34812-608	34813-608	21101-855	21101-856	20808-062	20808-083
10	34812-610	34813-610			20808-004	20808-085
12	34812-612	34813-612			20808-064	20808-086
14	34812-614	34813-614			20808-065	20808-087
21	34812-621	34813-621			20808-066	20808-088
28	34812-628	34813-628			20808-067	20808-089
42	34812-642	34813-642			20808-068	20808-091
Dimensions see page	7.82	7.82			7.82	7.82

1) SPQ (standard pack quantity): Part number includes 1 piece, but delivery is exclusively made in standard pack quantity (SPQ); please order at least the SPQ quantity or a multiple

Part no. includes one packing unit (PU); delivery is exclusively made in PU

Individual components — Side panels, cover plates, guide rails

	Extruded side panel		Extruded side panel with cooling fins		Side panel, corner profile and side plate		Cover plate	
	Left	Right	Left	Right	Corner profile	Side plate	Without perforation	With perforation
	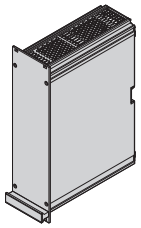 04808124	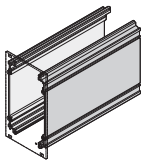 04808065	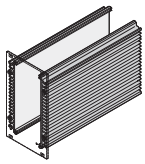 04811050		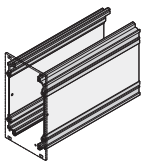 04808066	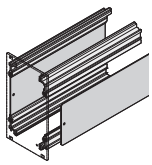 04808067	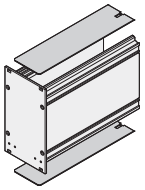 04808068	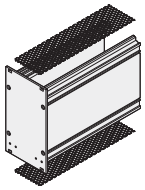 04808070
Supplied quantity for assembly of 5 frame type plug-in units	Al extrusion, colourless passivated, with groove for one PCB; 3 U symmetrical; 6 U asymmetrical, right and left side panel different) Side panels with and without cooling fins can be combined		Al extrusion, colourless passivated, with groove for one PCB; 3 U symmetrical; 6 U asymmetrical Side panels with and without cooling fins can be combined		Al extrusion, colourless passivated, with groove for one PCB, please order side plate separately	St, 1 mm, zinc-plated, is inserted into side panel rear angle	St, 1.0 mm, zinc-plated; PCB only possible in slot 1	St, 1.2 mm, Al, airflow rate in perforated area approx. 65 %; PCB only possible in slot 1
	1 piece (SPQ 10)[1)]	**1 piece (SPQ 10)[1)]**	**1 piece (SPQ 10)[1)]**	**1 piece (SPQ 10)[1)]**	**1 piece (SPQ 10)[1)]**	**1 piece (SPQ 5)[1)]**	**1 piece (SPQ 10)[1)]**	**1 piece (SPQ 10)[1)]**
Width	**3 U Height**							
HP	PCB depth 160 mm							
8	34812-100 1 piece (SPQ 10)[1)]	34812-100 1 piece (SPQ 10)[1)]	34812-200	34812-200	34812-102	34812-103	34812-408	34812-958
10							34812-410	34812-960
12							34812-412	34812-962
14							34812-414	34812-964
21							34812-421	34812-971
28							34812-428	34812-978
42							34812-442	34812-992
	PCB depth 220 mm							
8	34813-100 1 piece (SPQ 10)[1)]	34813-100 1 piece (SPQ 10)[1)]	34813-200	34813-200	34813-102	34813-103	34813-408	34813-958
10							34813-410	34813-960
12							34813-412	34813-962
14							34813-414	34813-964
21							34813-421	34813-971
28							34813-428	34813-978
42							34813-442	34813-992
Width	**6 U Height**							
HP	PCB depth 160 mm							
8	34812-600 1 piece (SPQ 5)[1)]	34812-601 1 piece (SPQ 5)[1)]	–	34812-701	34812-102	34812-603	34812-408	34812-958
10							34812-410	34812-960
12							34812-412	34812-962
14							34812-414	34812-964
21							34812-421	34812-971
28							34812-428	34812-978
42							34812-442	34812-992
	PCB depth 220 mm							
8	34813-600 1 piece (SPQ 5)[1)]	34813-601 1 piece (SPQ 5)[1)]	–	34813-701	34813-102	34813-603	34813-408	34813-958
10							34813-410	34813-960
12							34813-412	34813-962
14							34813-414	34813-964
21							34813-421	34813-971
28							34813-428	34813-978
42							34813-442	34813-992
Dimensions see page	7.80	7.80	7.80	7.80	7.81	7.81	7.84	7.84

1) SPQ (standard pack quantity): Part number includes 1 piece, but delivery is exclusively made in standard pack quantity (SPQ); please order at least the SPQ quantity or a multiple

Individual components — Rear panels, assembly material

	With perforation for guide rails		Rear panel			Rear panel fastener	Assembly kit
	Cover plate	Guide rail	Without cut-out	Cut-out for one connector	Cut-out for multiple connectors	for connection of rear panel with cover plate	
	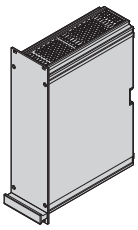 04808124	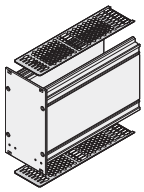 04808069	 04808074	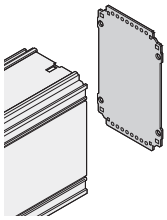 04808073	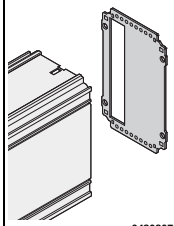 04808071	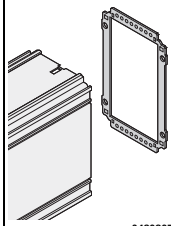 04808072	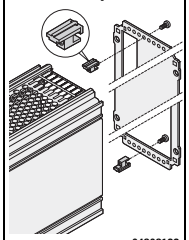 04808123	for mounting five 3 U or 6 U frame type plug-in units from ServicePLUS components: front panel, rear panel, side panel, cover plate and handle, description see page 7.78
Supplied quantity for assembly of 5 frame type plug-in units	St, 1.0 mm, zinc-plated; air flow rate in perforated area approx. 60 %; please order snap-in guide rails separately	PBT, UL 94 V-0, red, groove width 2 mm, PCB fixing required from slot 2, see page 7.79	St, 1.5 mm, zinc-plated	St, 1.5 mm, zinc-plated	St, 1.5 mm, zinc-plated, for EN 60603 (DIN 41612) connectors, types: B, C, D, F, H, Q, R, S	10 rear panel fasteners, Zn die-cast; 10 fixing screws; not suitable for cover plate with perforation		
	1 piece (SPQ 10)[1)]	**PU 10 pieces**	**1 piece (SPQ 5)[1)]**	**1 piece (SPQ 5)[1)]**	**1 piece (SPQ 5)[1)]**	**PU 1 kit**	**PU 1 kit**	
Width	**3 U Height**							
HP	PCB depth 160 mm							
8	34812-908	24812-101	34813-208	34812-208	34812-308	24812-401	24812-100	
10	34812-910		34813-210	34812-210	34812-310			
12	34812-912		34813-212	34812-212	34812-312			
14	34812-914		34813-214	34812-214	34812-314			
21	34812-921		34813-221	34812-221	34812-321			
28	34812-928		34813-228	34812-228	34812-328			
42	34812-942		34813-242	34812-242	34812-342			
	PCB depth 220 mm							
8	34813-908	24812-101	34813-208	34812-208	34812-308	24812-401	24812-100	
10	34813-910		34813-210	34812-210	34812-310			
12	34813-912		34813-212	34812-212	34812-312			
14	34813-914		34813-214	34812-214	34812-314			
21	34813-921		34813-221	34812-221	34812-321			
28	34813-928		34813-228	34812-228	34812-328			
42	34813-942		34813-242	34812-242	34812-342			
Width	**6 U Height**							
HP	PCB depth 160 mm							
8	34812-908	24812-101	34813-708	34812-708	34812-808	24812-401	24812-100	
10	34812-910		34813-710	34812-710	34812-810			
12	34812-912		34813-712	34812-712	34812-812			
14	34812-914		34813-714	34812-714	34812-814			
21	34812-921		34813-721	34812-721	34812-821			
28	34812-928		34813-728	34812-728	34812-828			
42	34812-942		34813-742	34812-742	34812-842			
	PCB depth 220 mm							
8	34813-908	24812-101	34813-708	34812-708	34812-808	24812-401	24812-100	
10	34813-910		34813-710	34812-710	34812-810			
12	34813-912		34813-712	34812-712	34812-812			
14	34813-914		34813-714	34812-714	34812-814			
21	34813-921		34813-721	34812-721	34812-821			
28	34813-928		34813-728	34812-728	34812-828			
42	34813-942		34813-742	34812-742	34812-842			
Dimensions see page	7.84	7.84	7.83	7.83	7.83			

1) SPQ (standard pack quantity): Part number includes 1 piece, but delivery is exclusively made in standard pack quantity (SPQ); please order at least the SPQ quantity or a multiple
Part no. includes one packing unit (PU); delivery is exclusively made in PU

Individual components

Fixing material (100 pieces)

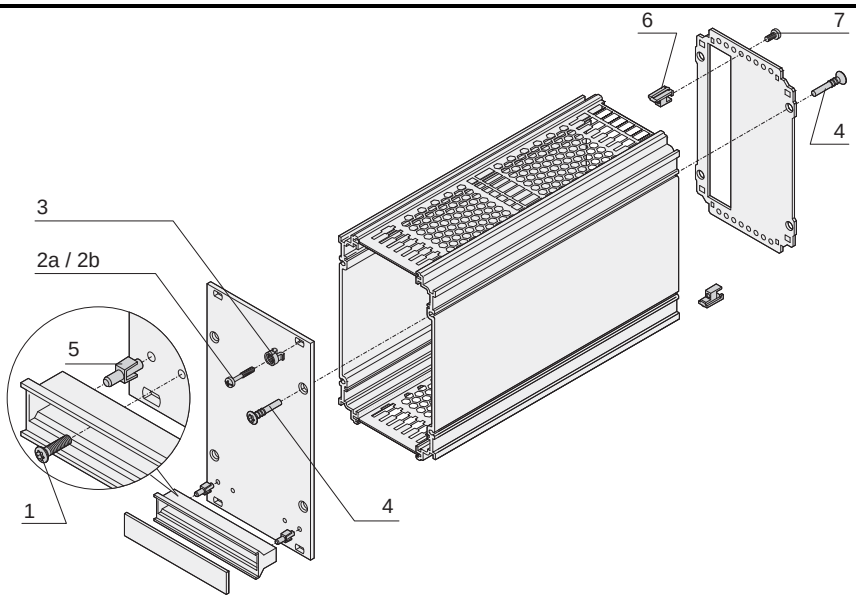

Fixing parts	Item		Required quantity per plug-in unit	Description	Qty/PU	Part no.
Fixing parts for mounting the module in subrack or case						
Torx panhead screw, M2.5 x 10, St, zinc-plated, self-forming thread	1	aza45940	2	Assembly of handle on front panel	100	24560-179
Pozidrive/slotted collar screw M2.5 × 11, St, nickel-plated	2a	aza46586	4 / 6* 06107050	Mounting of front panel on horizontal rail with threaded insert pushed in to front	100	21100-748
Pozidrive/slotted collar screw M2.5 × 12.3, St, nickel-plated	2b	aza46586	4 / 6* 06107051	Front panel is fitted to horizontal rail with threaded insert pushed in to rear in the standard position	100	21101-101
Plastic sleeves for form hole 5.9 x 3.3, PA, UL 94 V-2, grey	3	aza45933	4 / 6*	Is needed to fix collar screws	100	21100-464
Fixing parts for mounting the module						
Torx raised countersunk panhead screw 3 x 20, St, nickel-plated	4	06708052	8	Assembly of front panel and rear panel on extruded side panel/rear extrusion of side panel	100	24812-501
Fixing clip for trapeziform plastic handle PPE UL 94 V 0, black	5	04608090	2	Alignment aid for handle on front panel	100	21101-239
Rear panel fastener Zn die-cast	6	04808128	2	To stabilise rear panel with wide frame-type plug-in units	100	24812-402
Torx panhead screw M2.5 × 10, St, nickel-plated	7	aza45940	2	To fix rear panel fastener or board fixing	100	24560-148
Board support (slot 1) Zn die-cast		04808126	2	Board support (slot 1) see page 7.79	50 pairs	24812-202
Board support (from slot 2) Zn die-cast		04808127	2	Board support (from slot 2) see page 7.79	50 pairs	24812-302
Torx panhead screw M2.5 × 6, St, nickel-plated		aza45940	2	Is needed for board fixing without connector see page 7.79	100	24560-178

* on 42 HP EMC shielded frame type plug-in units

■ Further collar screws and sleeves see page 7.107

Part number in bold face type: ready for despatch within 2 working days
Part number in normal type: ready for despatch within 10 working days

Individual components — Board fixing

	Board fixing slot 1	Board fixing from slot 2	
	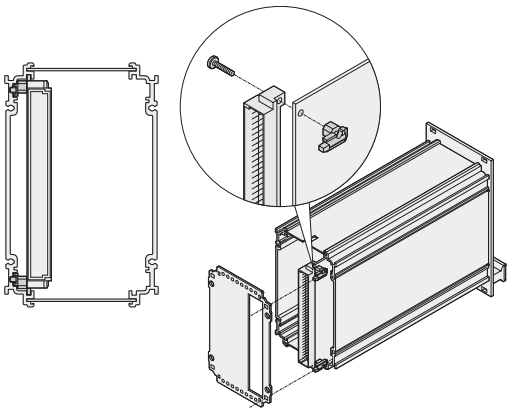	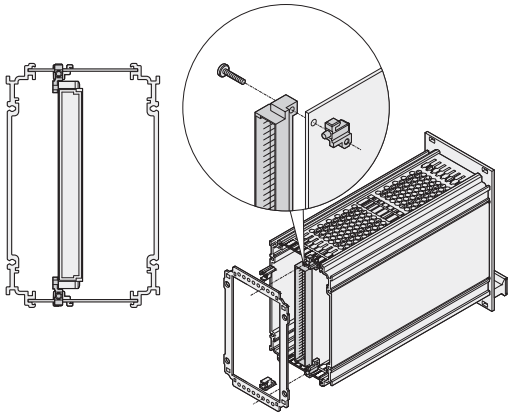	
	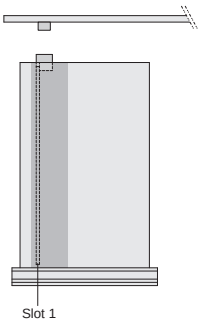	With connector from slot 2 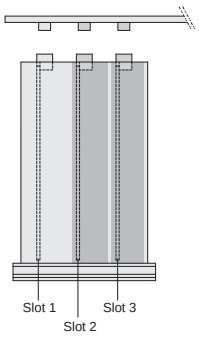	Without connector from slot 2 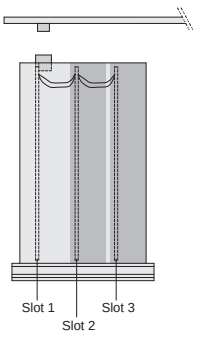
	04808118 04808109 04808129	04808119 04808110 bga42785 kaa46417	
	Zn die-cast, Torx panhead screw M2.5 x 10; PCB is pushed into the guiding groove of the left side panel/ side panel rear angle, is fixed with rear panel	Zn die-cast, Torx panhead screw M2.5 x 10; PCB is pushed into guide rail, is fixed with rear panel	
Height	**PU 5 pair**	**PU 5 pair**	
3 U	24812-201	24812-301	
6 U	24812-201	24812-301	
Assembly kits		With connector from slot 2	Without connector from slot 2
Torx panhead screw, M2.5 x 6, St, nickel-plated, PU 100 pieces; is needed for board fixing without connector	 24560-178 aza45940	–	24560-178
Connector mounting on PCB, for 6 U frame type plug-in units (centre) Torx panhead screw M2.5 x 10, nut M2.5; PU 10 pieces (screw + nut)	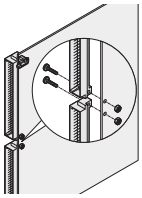 24812-600 04808120	24812-600	

Frame type plug-in units PRO

Dimensions Side panel without cooling fins

3 U

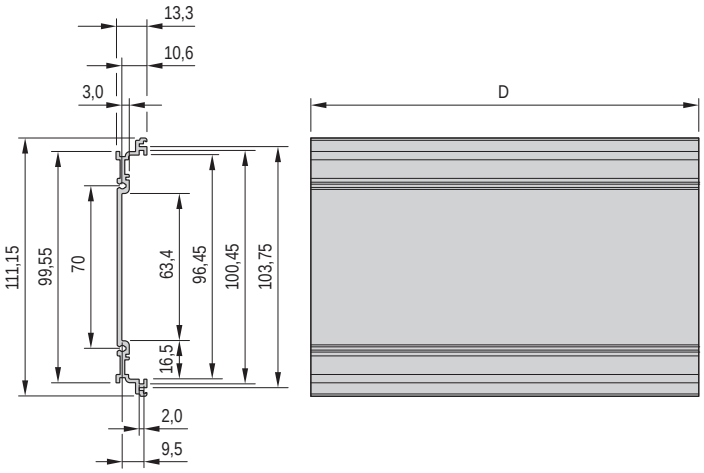

6 U

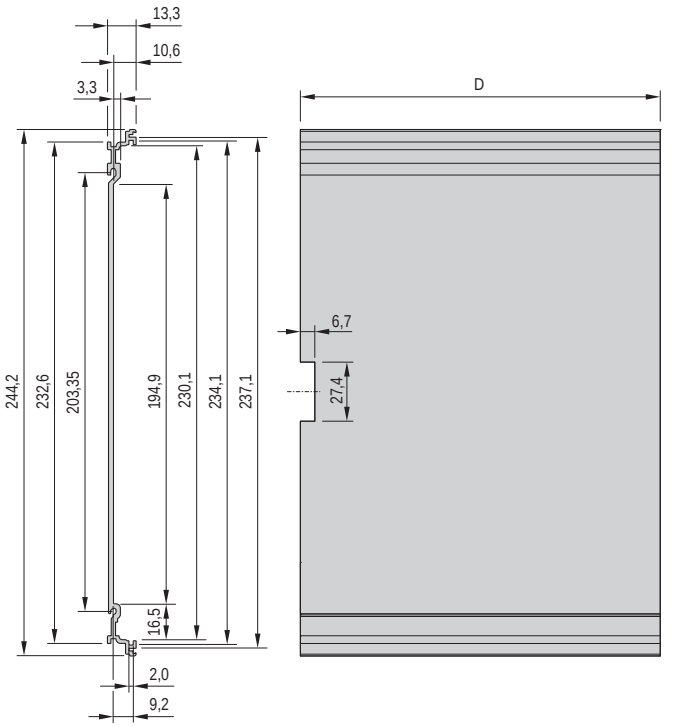

Depth = 167/227 mm

Dimensions Side panel with cooling fins

3 U

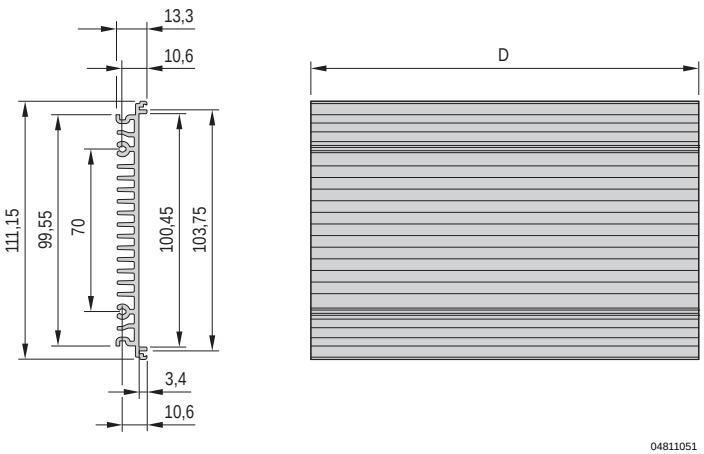

6 U

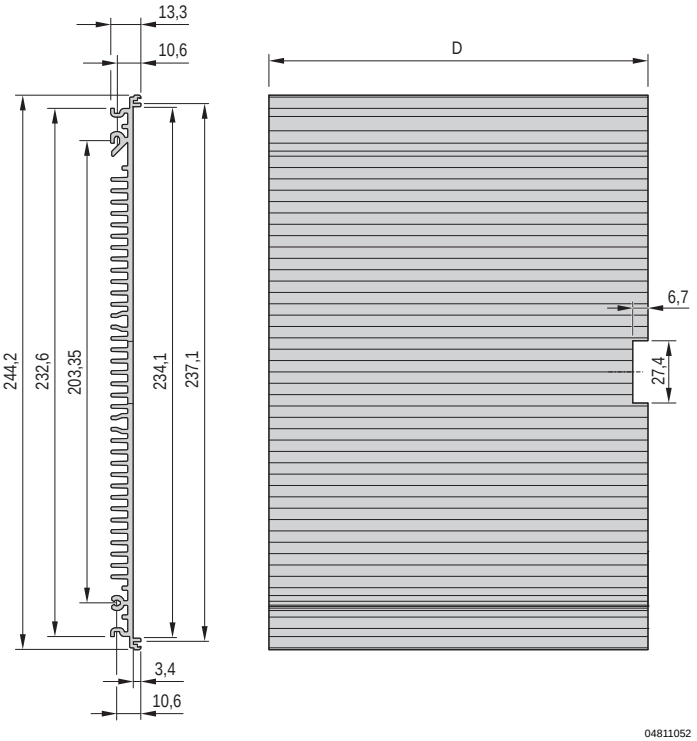

Depth = 167/227 mm

Part number in bold face type: ready for despatch within 2 working days
Part number in normal type: ready for despatch within 10 working days

Dimensions Side panel rear angle

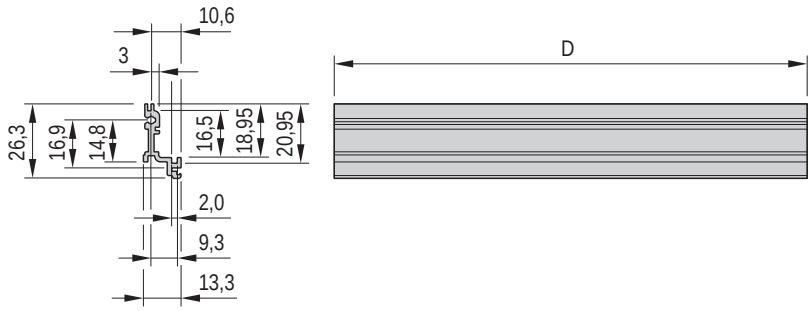

04808103

Depth = 167/227 mm

Dimensions Side plate

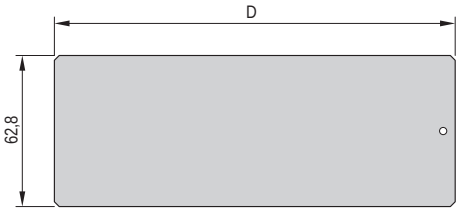

04808100

3 U for side panel rear angle

6

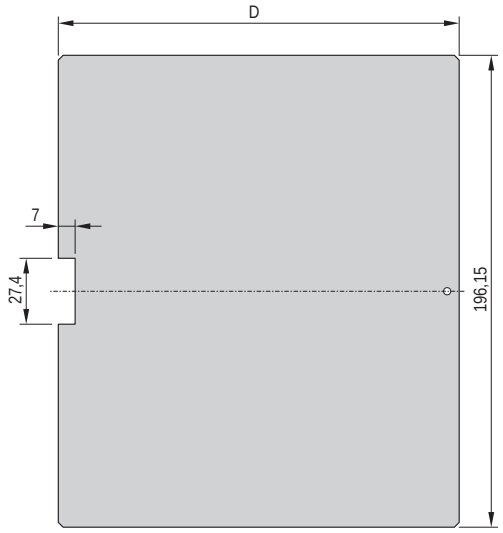

04808099

6 U for side panel rear angle

Frame type plug-in units PRO

Dimensions Front panels

Unshielded

3 U

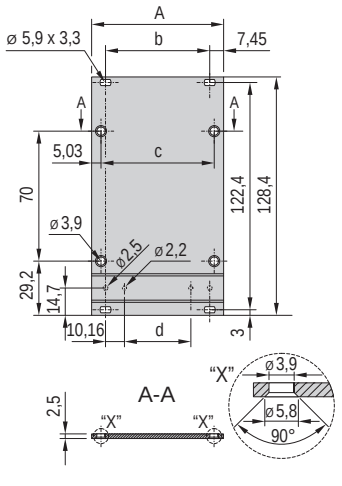

04808086

6 U

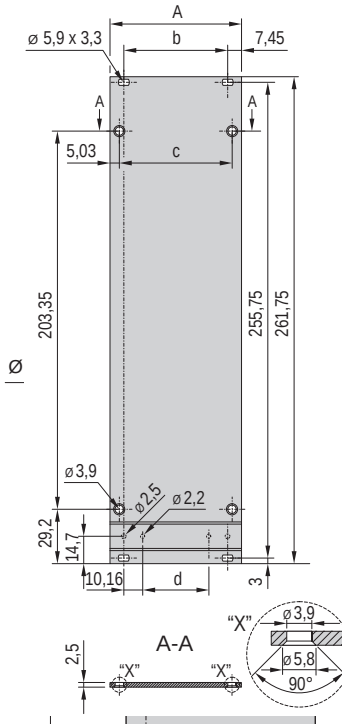

04808087

Shieldable, for EMC textile gasket

3 U

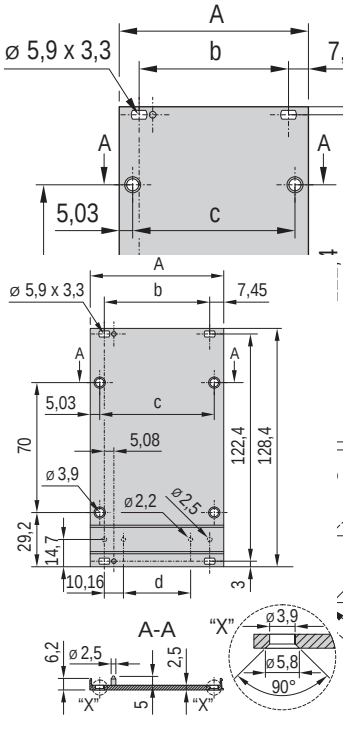

04808088

6 U

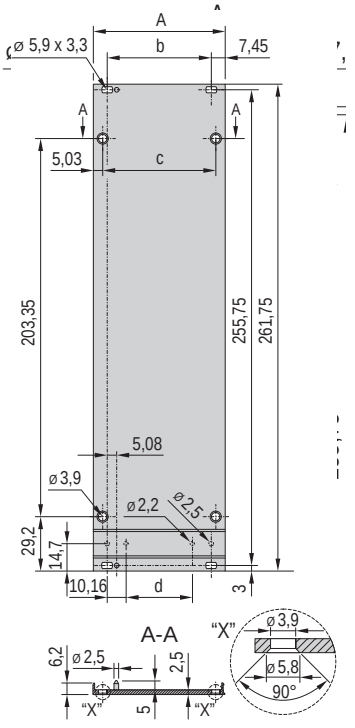

04808089

Dimensions table

Width	A mm	b mm	c mm	d mm
8 HP	40.30	25.40	30.24	5.08
10 HP	50.46	35.56	40.40	15.24
12 HP	60.62	45.72	50.56	25.40
14 HP	70.78	55.88	60.72	35.56
21 HP	106.34	91.44	96.28	71.12
28 HP	141.90	127.00	131.84	106.68
42 HP	213.02	198.12	202.96	177.80

Dimensions Front handle

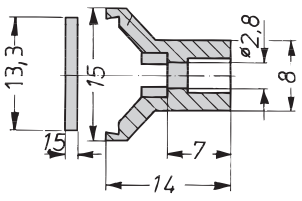

A4-328e

Dimensions table

Width HP	Width mm
8 HP	39.2
10 HP	49.4
12 HP	59.6
14 HP	69.7
21 HP	105.2
28 HP	140.8
42 HP	212.0

Dimensions Rear panel 3 U

Without cut-out

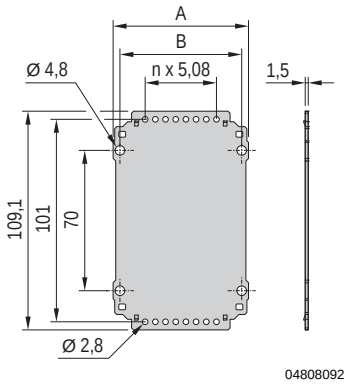

04808092

For one connector

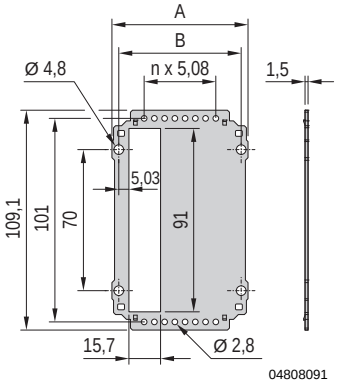

04808091

For multiple connectors

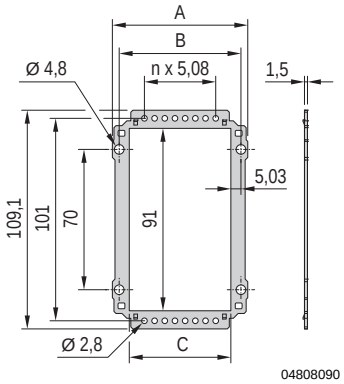

04808090

Dimensions table

HP	A mm	B mm	C mm
8 HP	37.04	30.24	20.18
10 HP	47.20	40.40	30.34
12 HP	57.36	50.56	40.50
14 HP	67.52	60.72	50.66
21 HP	103.08	96.28	86.22
28 HP	138.64	131.84	121.78
42 HP	209.76	202.96	192.90

Dimensions Rear panel 6 U

Without cut-out

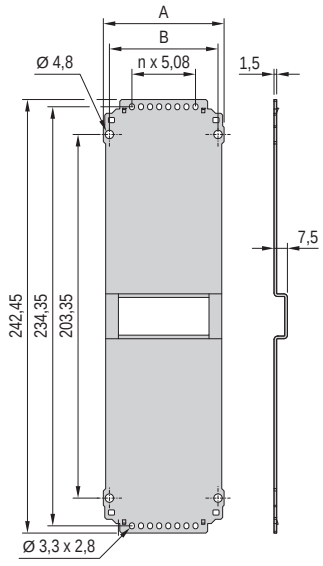

04808095

For one connector

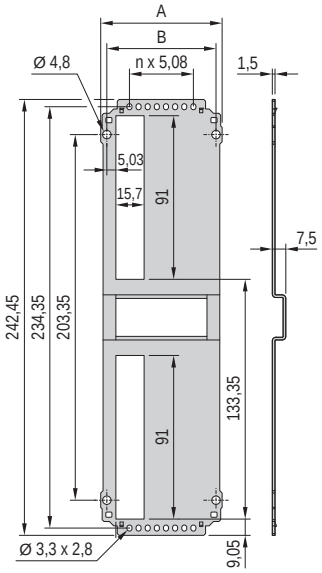

04808094

For multiple connectors

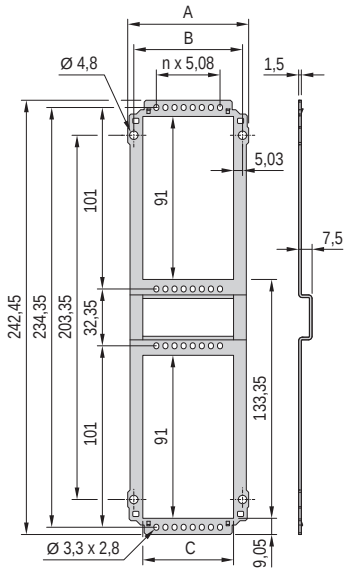

04808093

Dimensions table

HP	A mm	B mm	C mm
8 HP	37.04	30.24	20.18
10 HP	47.20	40.40	30.34
12 HP	57.36	50.56	40.50
14 HP	67.52	60.72	50.66
21 HP	103.08	96.28	86.22
28 HP	138.64	131.84	121.78
42 HP	209.76	202.96	192.90

Frame type plug-in units PRO

Dimensions Guide rail

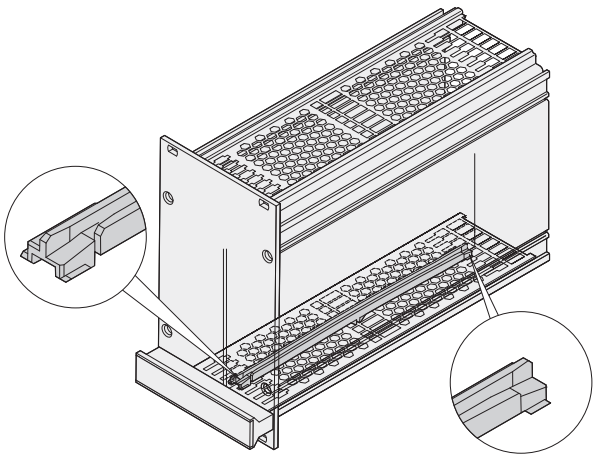

04808096

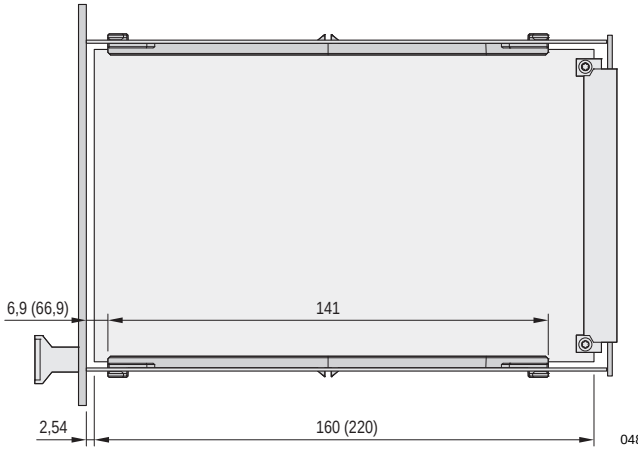

04808088

Dimensions Cover plates

without perforation

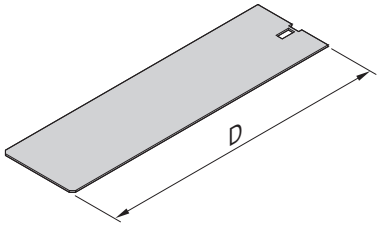

04808104

with perforation

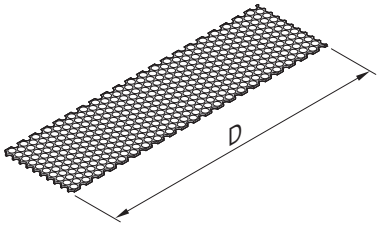

04808106

for guide rail mounting

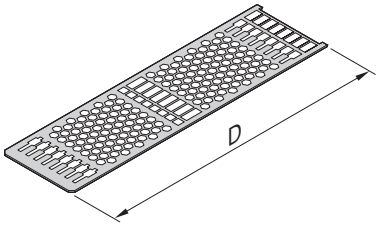

04808105

D = 167/227 mm

Part number in bold face type: ready for despatch within 2 working days
Part number in normal type: ready for despatch within 10 working days

Frame type plug-in units PRO

Dimensions Mounting instructions for guide rails in frame type plug-in units

Slot 1 + slot 2

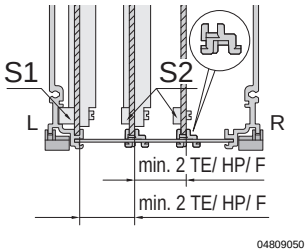

Slot 2

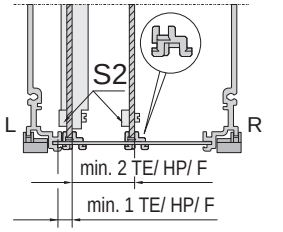

Front view

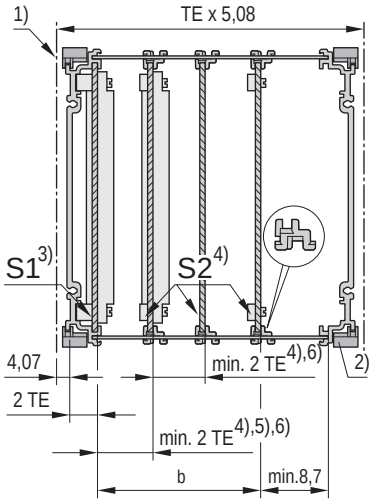

- Mounting pitch for guide rails: 1 HP
- Min. distance between 2 guide rails: 2 HP

Width of frame type plug-in unit	b	Max. number of PCBs mountable	
HP	mm	slot 1	from slot 2
8	–	1	1
	5.08	–	1 5)
10	10.16	1	1 6)
	15.24	–	2 5)6)
12	20.32	1	2 6)
	25.40	–	3 5) 6)
14	30.48	1	3 6)
	35.56	–	4 5) 6)
21	71.12	1	7 6)
	66.04	–	7 5) 6)
28	101.60	1	10 6)
	106.68	–	11 5) 6)
42	172.72	1	17 6)
	177.80	–	18 5) 6)

TE = HP = F

1) Division line
2) Guide rail rotated by 180° from standard position
3) The first PCB is held in the extruded side panel, corresponds to standard position (slot 1)
4) All additional PCBs are fitted into guide rails (from slot 2)
5) Min. 1 HP where slot 1 is not used (slot 2)
6) Dependent on construction of connector used (not every connector allows a 2 HP fitting)

Dimensions Mounting space frame-type plug-in unit 3 U/6 U

Front view

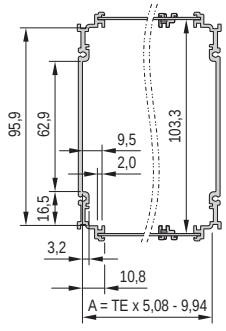

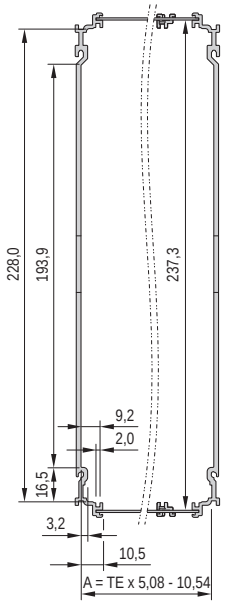

Dimensions table

Height	Width	A
U	HP	mm
3	8	30.70
3	10	40.86
3	12	51.02
3	14	61.18
3	21	96.74
3	28	132.30
3	42	203.42
6	8	30.10
6	10	40.26
6	12	50.42
6	14	60.58
6	21	96.14
6	28	131,70
6	42	202.82

Frame type plug-in units PRO with hood

Frame type plug-in units PRO with hood, 3/6 U, front panel shielded (textile gasket)



Illustration shows 12 HP width, side panel depth 167 mm

- Protects a PCB against mechanical damage and deflects electrostatic discharge; for euroboard formats
- Suitable in all subracks and these cases: ratiopacPRO/-air, propacPRO and compacPRO
- Useable connectors in accordance with EN 60603-2 (DIN 41612)
- 2 depths, for 160 mm and 220 mm boards

Delivery comprises (kit)

Item	Qty	Description
1	1	Front panel, U profile, 2.5 mm, front anodised, rear conductive, alignment pin pressed-in
2	1	Handle, grey, PPE, UL 94 V-1
3	1	Side panel, Al extrusion, colourless passivated, with groove for one PCB
4	1	Hood, Al, 1 mm, with perforation, rear panel integrated
5	1	EMC textile gasket
6	1	Assembly kit (incl. PCB fixing for slot 1)

ServicePLUS see page 7.74

Order Information

5 HP	6 ... 14 HP	Height U	Width HP	Depth = 167 mm Part no.	Depth = 227 mm Part no.
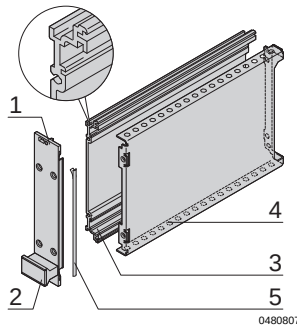	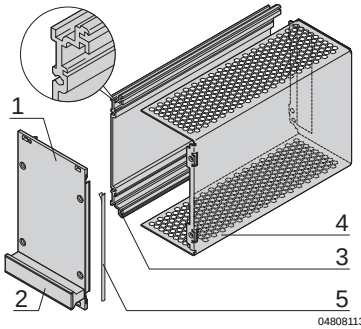	3	5	24813-005	24813-055
		3	6	24813-006	24813-056
		3	7	24813-007	24813-057
		3	10	24813-010	24813-060
		3	12	24813-012	24813-062
		3	14	24813-014	24813-064
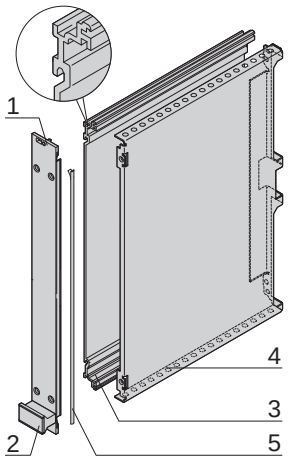	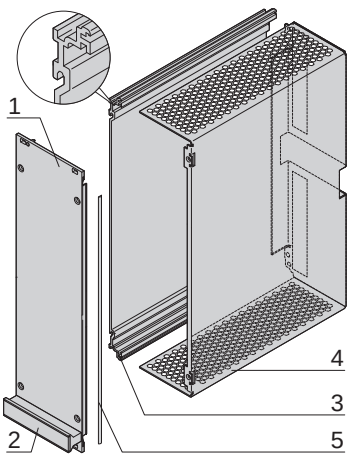	6	5	24813-505	24813-555
		6	6	24813-506	24813-556
		6	7	24813-507	24813-557
		6	10	24813-510	24813-560
		6	12	24813-512	24813-562
		6	14	24813-514	24813-564

- Dimension drawings see from page 7.88

Part number in bold face type: ready for despatch within 2 working days
Part number in normal type: ready for despatch within 10 working days

Frame type plug-in units PRO with hood

Plug-in units PRO with hood, 3/6 U, front panel unshielded



04808002

Illustration shows 12 HP width, side panel depth 167 mm

- Protects a PCB against mechanical damage and deflects electrostatic discharge; for euroboard formats
- Suitable in all subracks and these cases: ratiopacPRO/-air, propacPRO and compacPRO
- Useable connectors in accordance with EN 60603-2 (DIN 41612)
- 2 depths, for 160 mm or 220 mm board

Delivery comprises (kit)

Item	Qty	Description
1	1	Front panel, Al, 2.5 mm, anodised, cut edges plain
2	1	Handle, grey, PPE, UL 94 V-1
3	1	Side panel, Al extrusion, colourless passivated, with groove for one PCB
4	1	Hood, Al, 1 mm, with perforation, rear panel integrated
5	1	Assembly kit (incl. PCB fixing for slot 1)

ServicePLUS see page 7.74

Order Information

5 HP

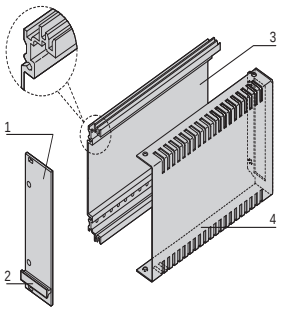

04808077

6 ... 14 HP

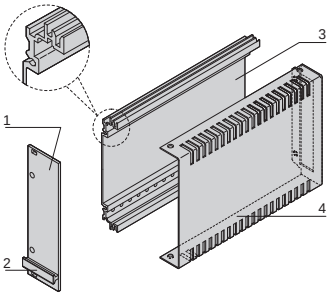

04808115

Height U	Width HP	Depth = 167 mm Part no.	Depth = 227 mm Part no.
3	5	24812-005	24812-055
3	6	24812-006	24812-056
3	7	24812-007	24812-057
3	10	24812-010	24812-060
3	12	24812-012	24812-062
3	14	24812-014	24812-064

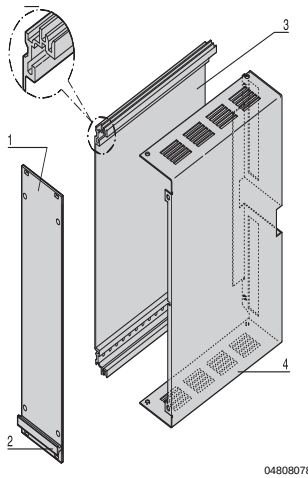

04808078

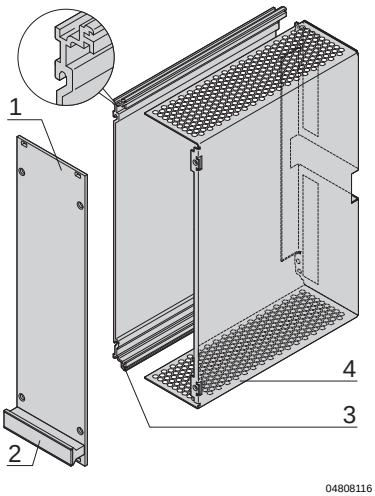

04808116

6	5	24812-505	24812-555
6	6	24812-506	24812-556
6	7	24812-507	24812-557
6	10	24812-510	24812-560
6	12	24812-512	24812-562
6	14	24812-514	24812-564

- Dimension drawings see from page 7.88

Frame type plug-in units PRO with hood

Dimensions Cross-section frame-type plug-in units PRO with hood 3 U/6 U

3 U

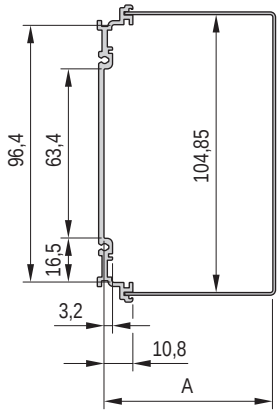

04808080

6 U

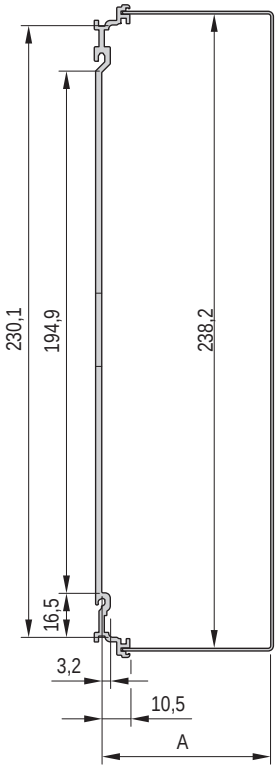

04808082

Dimensions table

Height U	Width HP	A mm
3	5	17.52
3	6	22.60
3	7	27.68
3	10	42.92
3	12	53.08
3	14	63.24
6	5	17.22
6	6	22.30
6	7	27.38
6	10	42.62
6	12	57.78
6	14	62.94

Dimensions Front handle

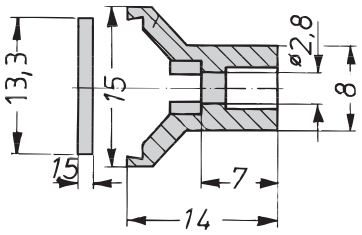

a4-328e

Dimensions table

Width HP	Width mm
5	24.0
6	29.0
7	34.1
10	49.4
12	59.6
14	69.7

Part number in bold face type: ready for despatch within 2 working days
Part number in normal type: ready for despatch within 10 working days

Frame type plug-in units PRO with hood

Dimensions 3/6 U frame-type plug-in units PRO with hood

3 U Front panel shieldable

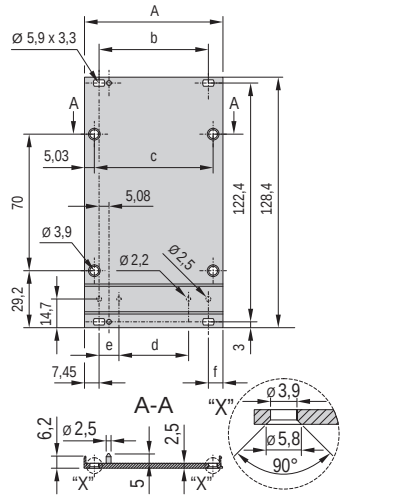

04808052

Front panel unshielded

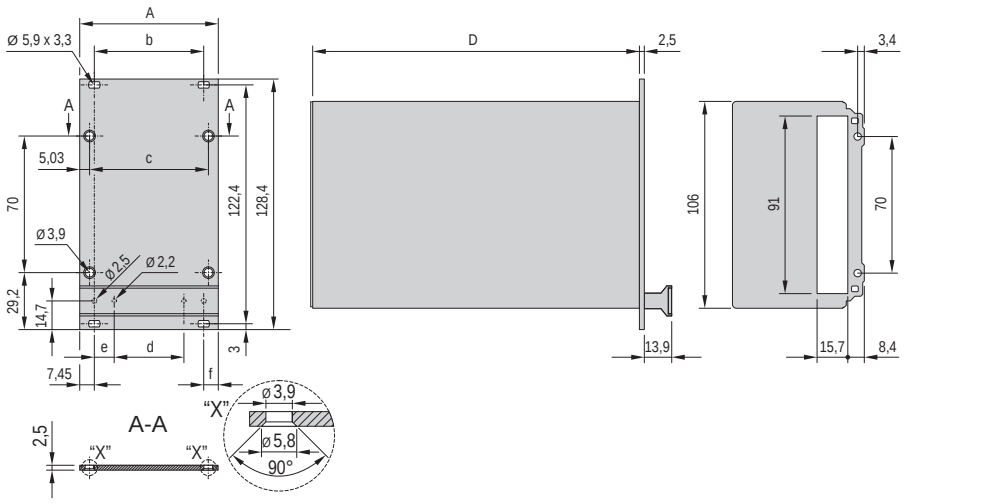

04808111

6 U Front panel shieldable

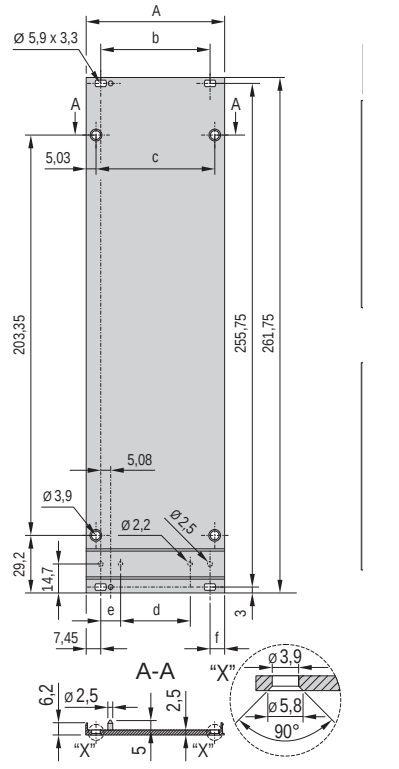

04809053

Front panel unshielded

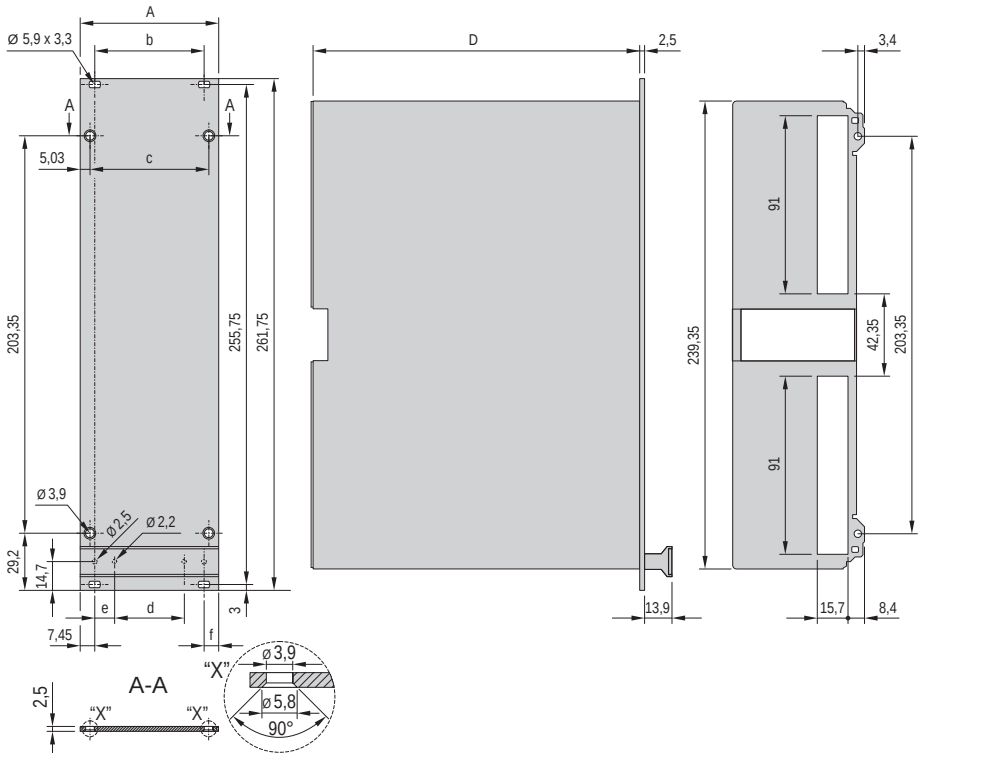

04808112

Front panel

5 HP

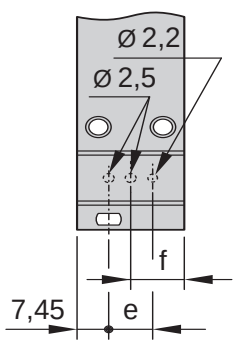

04809067

6 + 7 HP

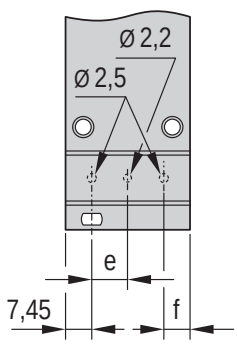

04809066

Dimensions table

Width HP	A mm	b mm	c mm	d mm	e mm	f mm	Depth D mm
5	25.06	-	15.00	-	10.16	12.53	167 mm/ 227 mm
6	30.14	-	20.08	-	10.16	7.45	
7	35.22	-	25.16	-	10.16	7.45	
10	50.46	35.56	40.40	15.24	10.16	7.45	
12	60.62	45.72	50.56	25.40	10.16	7.45	
14	70.78	55.88	60.72	35.56	10.16	7.45	

HF frame type plug-in units, 3 U kits, front panel shielded

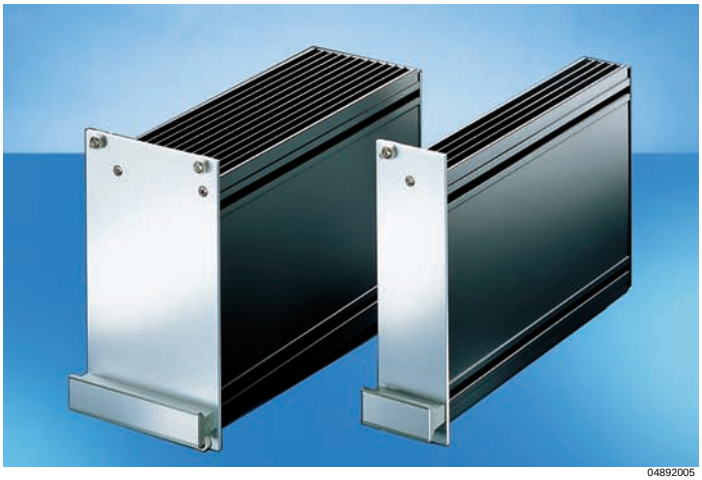

- With high shielding from high-frequency radiation
- To accept boards in HP grid increments
- Solid body on all sides, with cooling fins

Delivery comprises (kit)

Item	Qty	Description
1	1	Body tube, Al extrusion, black anodised, cut edges plain
2	1	Front panel, Al, 2.5 mm, with lateral grooves for EMC gasket (stainless steel), alignment pin pressed-in, front anodised, rear iridescent green chromated
3	1	Plastic handle, trapeziform, PPE, grey, identification plate, Al, anodised, cut edges plain
4	1	Rear panel, Al, 1.5 mm, etched without cut-outs
5	2	EMC gasket (steel, stainless)
6	1	Assembly kit

ServicePLUS see page 7.74

Technical data

HF plug-in unit	Thermal resistance K/W	
HP	Depth = 167 mm	Depth = 227 mm
7	1.68	1.51
10	1.62	1.46
12	1.56	1.40
14	1.50	1.35
21	1.06	0.95
28	0.94	0.85

Order Information

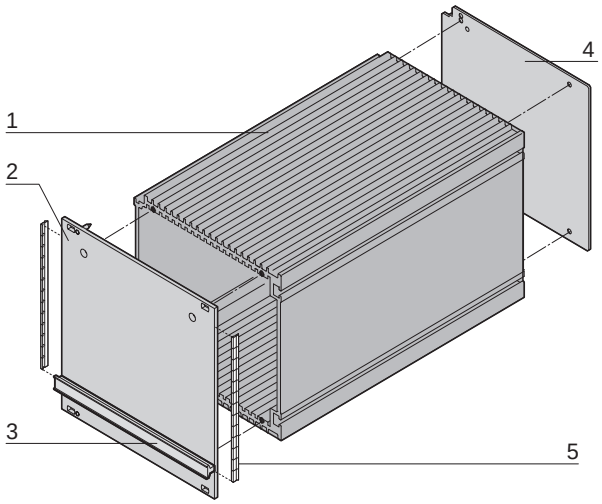

Height U	Width HP	Depth = 167 mm Part no.	Depth = 227 mm Part no.
3	7	20809-529	20809-536
3	10	20809-530	20809-537
3	12	20809-531	20809-538
3	14	20809-532	20809-539
3	21	20809-533	20809-540
3	28	20809-534	20809-541

Note

- Dimension drawings see from page 7.94

For further information www.schroff.biz/oneclick
oneClick search code = Part no.

Part number in bold face type: ready for despatch within 2 working days
Part number in normal type: ready for despatch within 10 working days

Individual components — HF body tube, front panels with handle, rear panels

Order Information

Height U	Width HP	HF body tube	Shieldable front panel, with handle	Shieldable front panel, with handle, for EMC gasket (stainless steel)	Shieldable front panel, with handle, EMC gasket (stainless steel)	Shieldable front panel, with handle, Assembly tool	Rear panel, without cut-out	Rear panel, with cut-out
		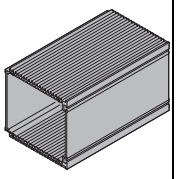 KAA45832	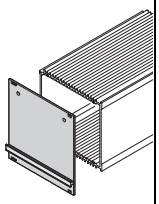 KAA45831	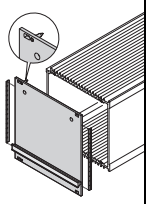 04807074	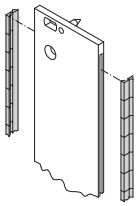 bga45760	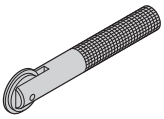 aza45937	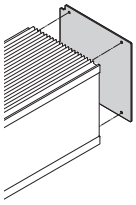 04807075	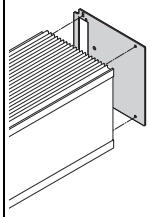 KAA45834
		Al extrusion, black anodised, cut edges plain	Al, 2.5 mm, front anodised, rear iridescent green chromated; static handle, grey, PPE, UL 94 V-1	Al, 2.5 mm, front anodised, rear iridescent green chromated, with lateral grooves for stainless steel EMC gasket (please order separately), alignment pin pressed-in, trapeziform handle, grey, PPE, UL 94 V-1	inserted laterally into the grooves of the front panel	to mount the EMC gasket (stainless steel)	Al, 1.5 mm, etched	Al, 2.5 mm, etched, cut-out for connector types EN 60603 (DIN 41612); 7 HP: B, C, D, R; 10 - 28 HP: B, C, D, R, F, H, MF, MH
		1 piece (SPQ 5)[1)]	**1 piece (SPQ 5)[1)]**	**1 piece (SPQ 5)[1)]**	**PU 100 pieces**	**1 piece**	**1 piece (SPQ 5)[1)]**	**1 piece (SPQ 5)[1)]**
		PCB depth 160 mm						
3	7	30809-667	20838-001	20838-093	21101-705	24560-270	30809-635	30809-641
	10	30809-677	20838-002	20838-094			30809-636	30809-642
	12	30809-675	20838-003	20838-095			30809-637	30809-643
	14	30809-673	20838-004	20838-096			30809-638	30809-644
	21	30809-671	20838-005	20838-097			30809-639	30809-645
	28	30809-669	20838-006	20838-098			30809-640	30809-646
		PCB depth 220 mm						
3	7	30809-668	20838-001	20838-093	21101-705	24560-270	30809-635	30809-641
	10	30809-678	20838-002	20838-094			30809-636	30809-642
	12	30809-676	20838-003	20838-095			30809-637	30809-643
	14	30809-674	20838-004	20838-096			30809-638	30809-644
	21	30809-672	20838-005	20838-097			30809-639	30809-645
	28	30809-670	20838-006	20838-098			30809-640	30809-646
		Depth 1000 mm (without thread for front panel and rear panel)						
3	7	30809-679	–	–	–	–	–	–
	10	30809-698						
	12	30809-699						
	14	30809-680						
	21	30809-681						
	28	30809-682						
Dimensions see page		7.94	7.95				7.94	

1) SPQ (standard pack quantity): Part number includes 1 piece, but delivery is exclusively made in standard pack quantity (SPQ); please order at least the SPQ quantity or a multiple

Part no. includes one packing unit (PU); delivery is exclusively made in PU

For further information www.schroff.biz/oneclick
oneClick search code = Part no.

Individual components — Slide nuts, fixing for PCBs, mounting kit

Order Information

Height U	Width HP	Slide nut M 2.5	Slide nut M 3	Fixing for PCBs: Individual components top	Fixing for PCBs: Individual components bottom	Fixing for PCBs: Complete assembly kit	Fixing material for one HF frame type plug-in unit
		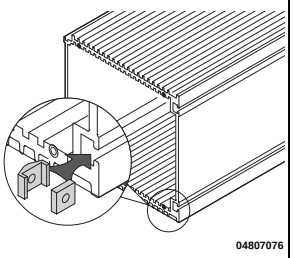 04807076		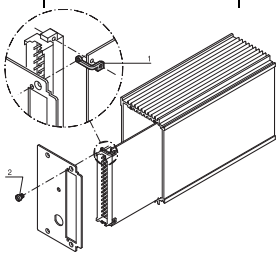 KAA45843			
		width across flats (WAF) 7, for insertion into HF body tube, top and bottom, provides lateral fixing (on right)		bracket (stainless steel), 1.5 mm; please order retention screws separately		bracket top and bottom (stainless steel), 1.5 mm; incl. two cheesehead screws M2.5 x 4	for complete assembly of a 3 U HF frame type plug-in unit: front panel, rear panel and handle, description see page 7.93
		PU 100 pieces	PU 100 pieces	1 piece (SPQ 10)[1]	1 piece (SPQ 10)[1]	PU 1 kit	PU 1 kit
3	7	21100-112	21100-289	30809-701	30809-700	21101-937	21100-105
	10						
	12						
	14						
	21						
	28						
Accessories							
Cheesehead screw M2.5 × 4, St, nickel-plated, PU 100 pieces		–	–	21100-431	21100-431	–	–

1) SPQ (standard pack quantity): Part number includes 1 piece, but delivery is exclusively made in standard pack quantity (SPQ); please order at least the SPQ quantity or a multiple

Part no. includes one packing unit (PU); delivery is exclusively made in PU

For further information www.schroff.biz/oneclick
oneClick search code = Part no.

Individual components — Fixing material (100 pieces)

Order Information

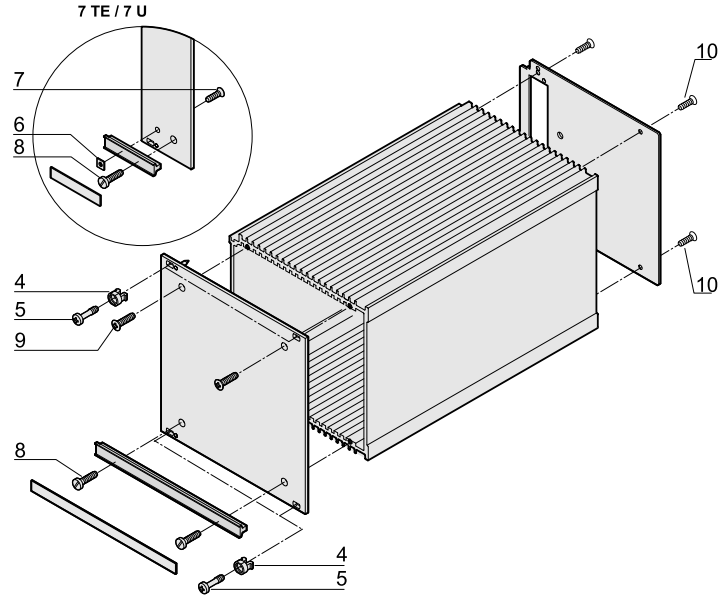

Description	Item		Required quantity per plug-in unit		Description	Qty/PU	Part no.
Fixing parts for mounting the module in subrack or case							
Plastic sleeve for form hole 5.9 x 3.3, PA, UL 94 V-2, grey	4	aza45933	2 at 7 HP 4 at > 7 HP		Front panel is fitted to horizontal rail with threaded insert pushed in to front	100	21100-464
Pozidrive/slotted collar screw M2.5 × 11, St, nickel-plated	5	aza46586	2 at 7 HP 4 at > 7 HP	06107050	Front panel is fitted to horizontal rail with threaded insert pushed in to front	100	21100-748
Pozidrive/slotted collar screw M2.5 × 12.3, St, nickel-plated	5	aza46586	2 at 7 HP 4 at > 7 HP	06107051	Front panel is fitted to horizontal rail with threaded insert pushed in to rear in the standard position	100	21101-101
Fixing parts for mounting the module							
Square nut DIN 562, M2.5,St, nickel-plated	6	06705050	1 at 7 HP		To mount handle on front panel	100	21100-359
Pozidrive countersunk screw M2.5 × 12, St, nickel-plated	7	aza45177	1 at 7 HP		To mount handle on front panel	100	21100-507
Slotted cheesehead screw M2.5 × 16, St, nickel-plated	8	aza45467	1 at 7 HP 2 at > 7 HP		To mount handle and front panel on HF body tube	100	21100-150
Raised Pozidrive countersunk panhead screw M2.5 × 8, St, nickel-plated	9	06702056	2		To mount front panel on HF body tube	100	21100-429
Pozidrive countersunk screw M2.5 × 6, St, nickel-plated	10	06702056	4		To mount rear panel on HF body tube	100	21100-515

Note

■ Further collar screws and sleeves see page 7.107

HF frame type plug-in units

Dimensions HF body tube

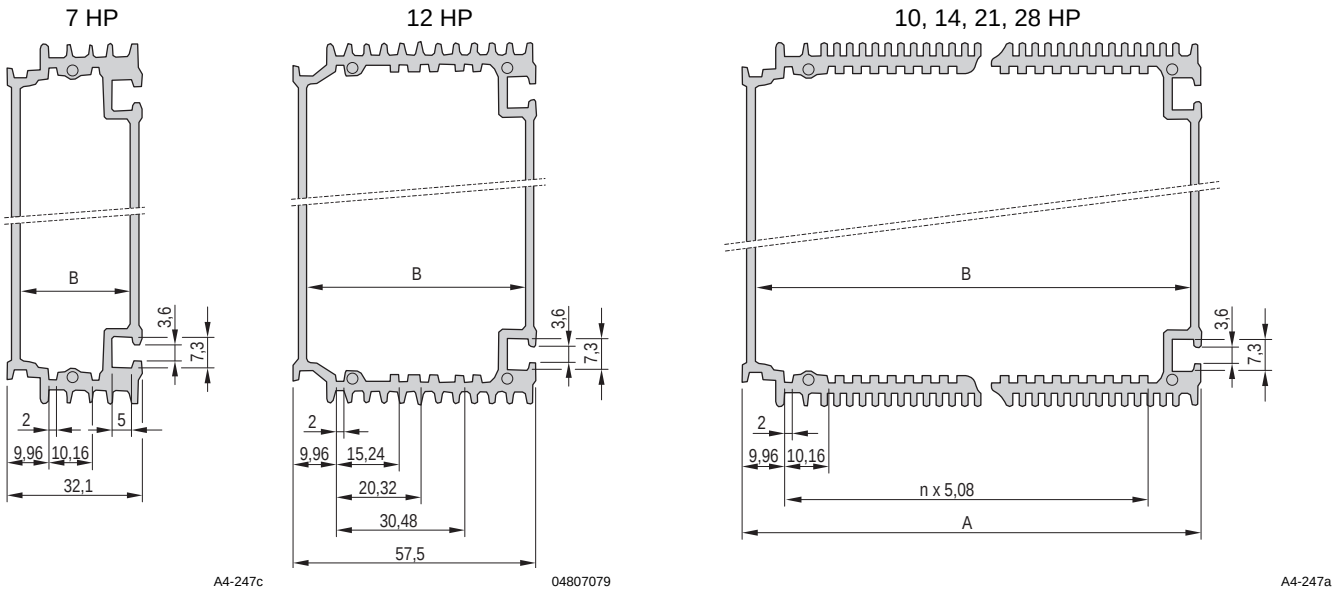

Dimensions table

Dimension	7 HP	10 HP	12 HP	14 HP	21 HP	28 HP
mm						
n	–	3 × 5.08	–	7 × 5.08	14 × 5.08	21 × 5.08
A	–	47.34	–	67.66	103.22	138.78
B	26.34	41.58	51.74	61.90	97.46	133.02

Dimensions Rear panel with/without cut-out for connector

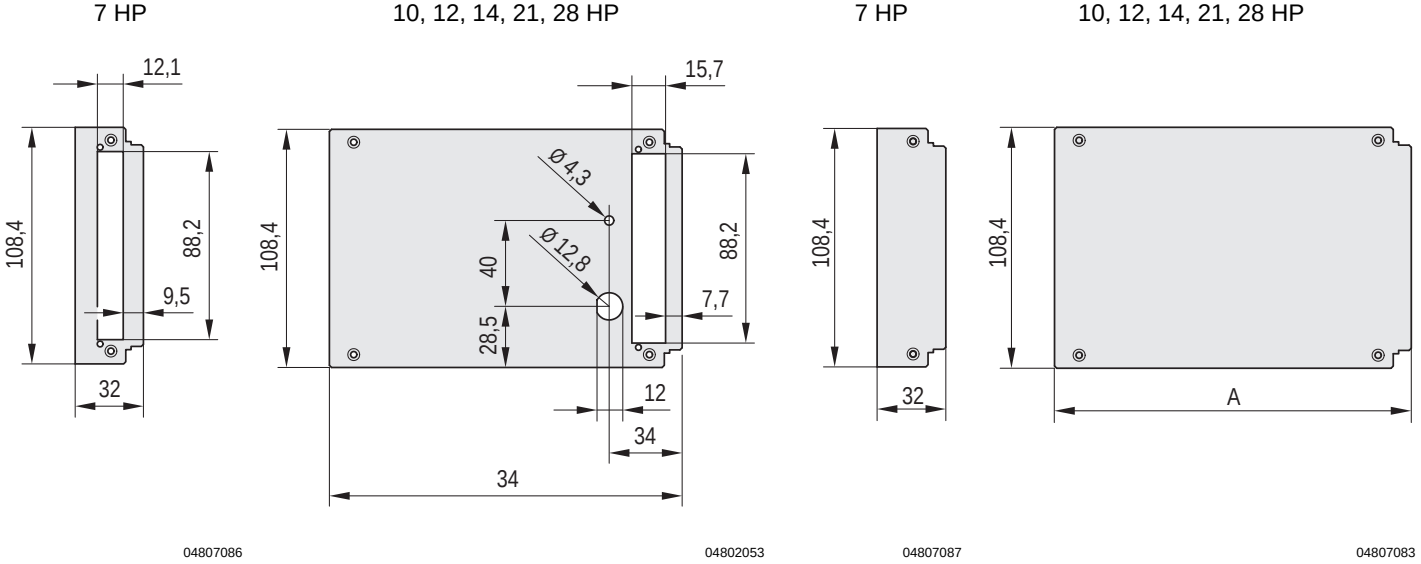

Dimensions table

Width	A
	mm
7 HP	32.00
10 HP	47.24
12 HP	57.40
14 HP	67,40
21 HP	103.12
28 HP	136.68

Part number in bold face type: ready for despatch within 2 working days
Part number in normal type: ready for despatch within 10 working days

HF frame type plug-in units

Dimensions Front panels

Unshielded

7 HP

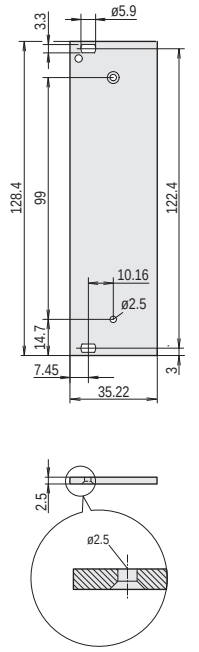

KAA43073

10, 12, 14, 21, 28 HP

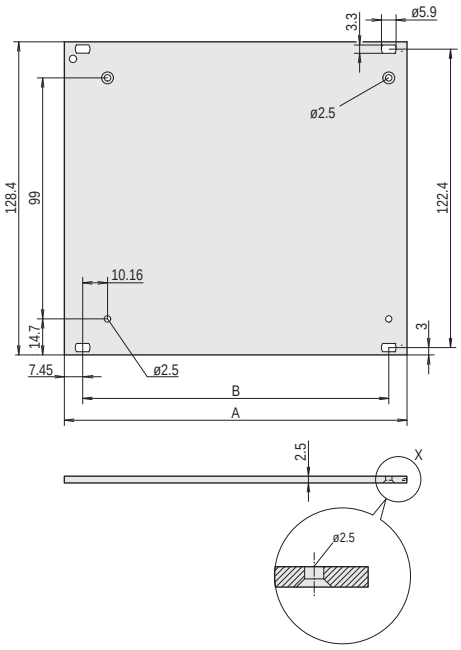

04807084

Shieldable, slotted for EMC stainless steel gasket

7 HP

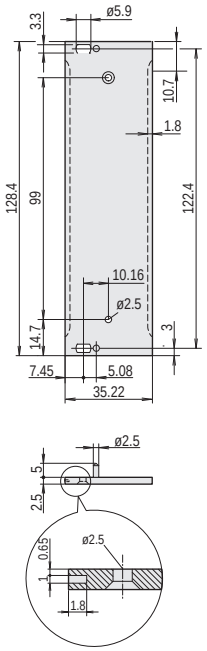

04807085

10, 12, 14, 21, 28 HP

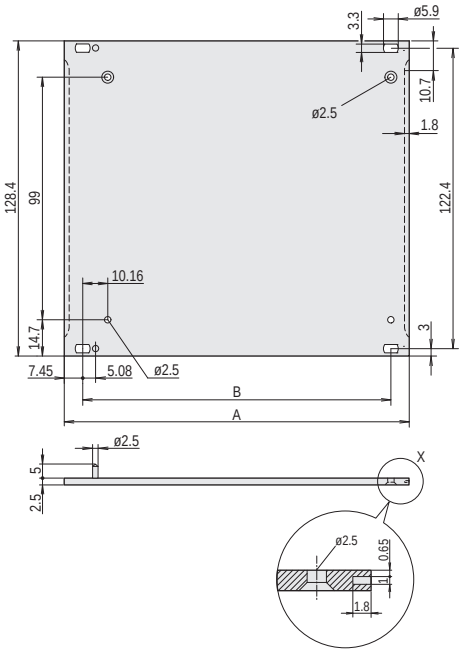

04803052

Dimensions table

Width	A	w
	mm	mm
7 HP	32.22	–
10 HP	50.46	35.56
12 HP	60.62	45.72
14 HP	70.78	55.88
21 HP	106.34	91.44
28 HP	141.90	127.00

Dimensions Front handle

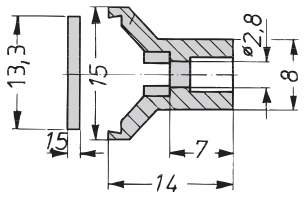

A4-328e

Dimensions table

Width	Width
HP	mm
10 HP	49.4
12 HP	59.6
14 HP	69.7
21 HP	105.2
28 HP	140.8

Adaptor for horizontal rail mounting

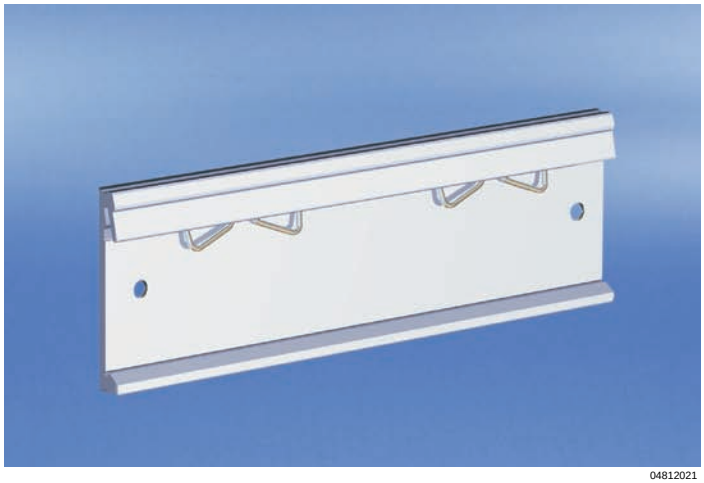

04812021

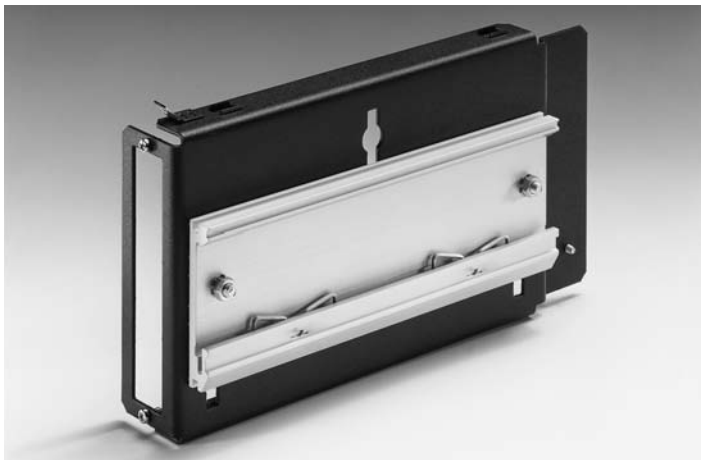

11395007

Example: horizontal rail adaptor with lip for 19" PSU

- For fitting of e.g. subracks, wall mounted cases, frame type plug-in units or PSUs on a horizontal rail with lip
- Adaptor is bolted to the desired product and can then be clipped onto the lipped horizontal rail (DIN 43880)

Delivery comprises

Item	Qty	Description
1	1	Adaptor, Al extrusion, length 160 mm
1	1	Fixing material

Order Information

Description	Part no.
Adaptor for horizontal rail mounting	11000-002

For further information www.schroff.biz/oneclick
oneClick search code = Part no.

Frame type plug-in units

Overview 0
Cabinets 1
Wall mounted cases 2
Accessories for cabinets and wall mounted cases 3
Climate control 4
Desk-top cases 5
Subracks/ 19" chassis . . . 6
Front panels, plug-in units . . 7
Systems 8
Power supply units 9
Backplanes . . 10
Connectors, front panel component system 11
Appendix 12

minipac

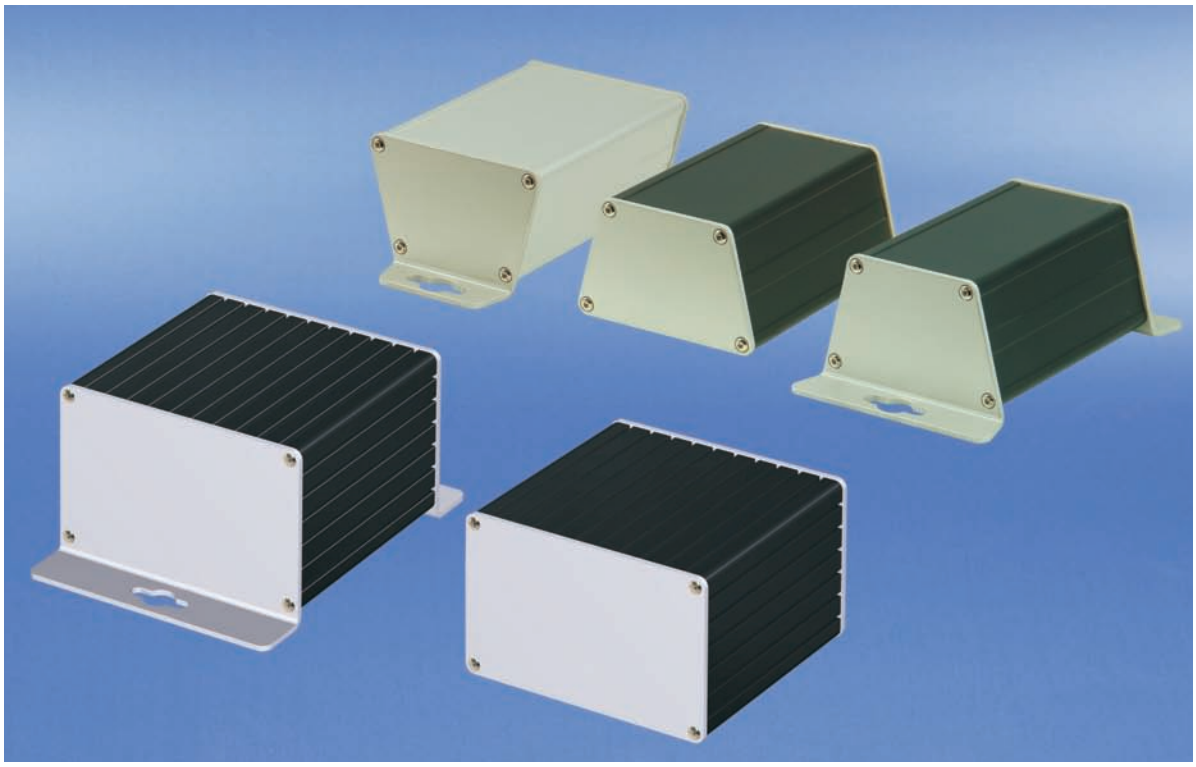

04812001

Small aluminium extrusion cases to hold PCBs

- For applications e.g. in industry, railway technology, test and measurement, communications and network technology

Fixing options

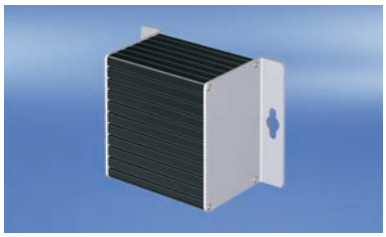

04812006

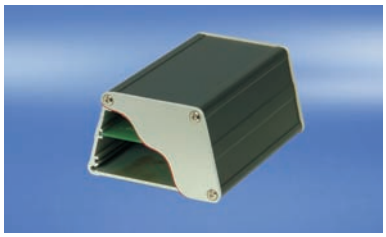

04811015



04812003

Various dimensions/colours

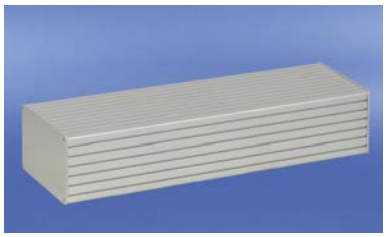

04812023



04812024



04812025

Individual shapes



04812026



04812027



04812028

Overview 7.98

Convenient small case - flexible enough for all your requirements

- **To accomodate standardised and non-standardised PCBs**
- **As desktop enclosure, for bolting (e.g. to a mounting plate) or for mounting on DIN support rail (DIN 43880)**
- **High level of heat dissipation through large aluminimum surface of case**
- **High stability**
- **Type of protection: IP 40**

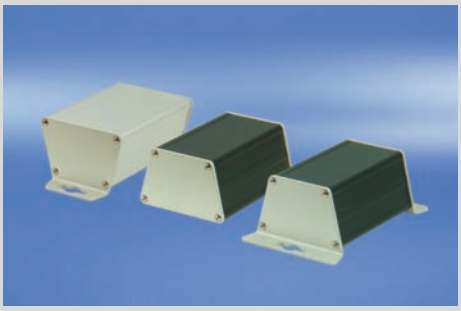

04811014

Trapezium shape

- Accommodates up to 3 PCBs of different heights - 50, 60 or 65 mm and board depth 100 or 160 mm
- As desktop enclosure, for wall mounting or for mounting on DIN support rail (DIN 43880)

Trapezium shape 7.100

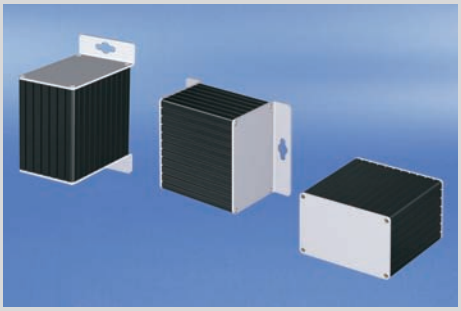

04812002

Rectangular shape

- Accommodates up to 4 standardised PCBs in euroboard format, height 100 mm (3 U) or up to 8 non-standardised PCBs, height 60 mm and board depth 160 mm
- Versions as desktop enclosure or for wall mounting

Rectagonal shape 7.101



30407004

Individual cases in aluminium extrusion - our minipac variety to your specifications

- Other case lengths
- Other case shapes
- Cut-outs for lamps, switches, connectors, cable ducting, etc.
- Individual printing of cover plates
- Surface finish anodised or powder-coated

FRONT PANEL EXPRESS

30402151

Trapezium shape

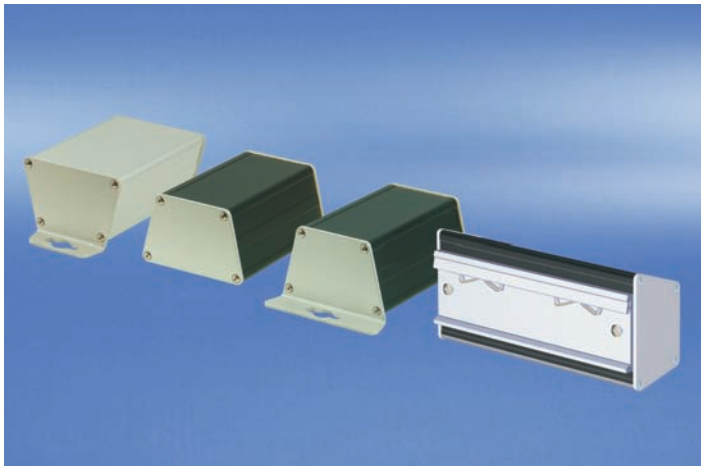

04812004

- Accommodates 3 non-standardised PCBs (height 50, 60 and 65 mm, depth 100/160 mm)
- PCB thickness 1.6 mm, spacing 15.24 mm (3 HP)
- Different versions
  - Wall mounting
  - For mounting on a DIN support rail (DIN 43880)
  - Desktop version

NEW

Delivery comprises

Item	Qty	Description
1	1	Case, trapeziform, Al extrusion
2	2	Lateral cover plate, 2.5 mm, anodised
3	1	Fixing material kit, user manual

Order Information

Description	Length mm	Part no.
Case, trapeziform, Al extrusion, black anodised; lateral cover plates anodised, thickness 2.5 mm (no mounting option)	100.5	24814-008
Case, trapeziform, Al extrusion, black anodised, lateral cover plates anodised, thickness 2.5 mm (for wall mounting on long side of trapezoid)	100.5	24814-010
Case, trapeziform, Al extrusion, anodised; lateral cover plates anodised, thickness 2.5 mm (for wall mounting on short side of trapezium)	100.5	24814-011
Case, trapeziform, Al extrusion, black anodised; for DIN support rail mounting (DIN 43880); lateral cover plates anodised, thickness 2.5 mm (for mounting on a DIN support rail, DIN 43880)	160.5	24814-014
Accessories		
Rubber foot for desktop version, PU 4 pieces		21102-025

Note

- **On request:**
  - Other case lengths
  - Cut-outs for LEDs, switches, connectors or couplings (USB, SUB-D)
  - Individual printing on cover plate

For further information www.schroff.biz/oneclick
oneClick search code = Part no.

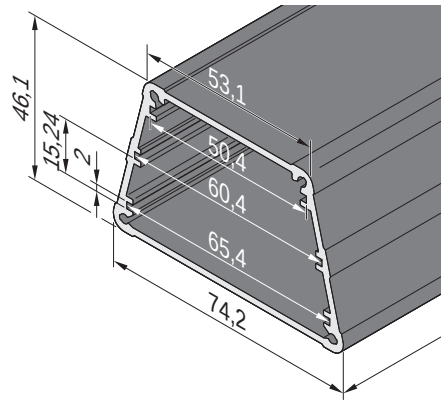

04811053

Dimensions of body tube

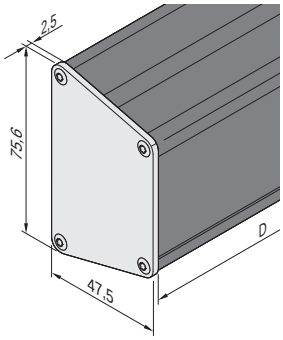

04812053

Desktop version

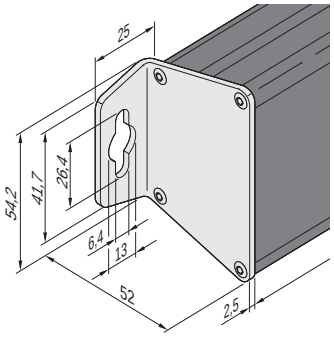

04812052

Wall mounting
(on short side of trapezoid)

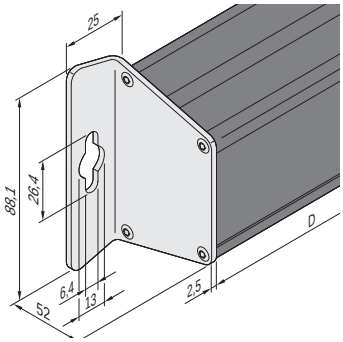

04812051

Wall mounting
(on long side of trapezoid)

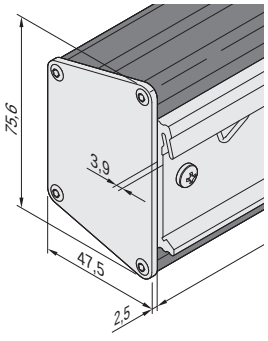

04812057

For mounting on a DIN support rail (DIN 43880)

Part number in bold face type: ready for despatch within 2 working days
Part number in normal type: ready for despatch within 10 working days

Rectangular shape

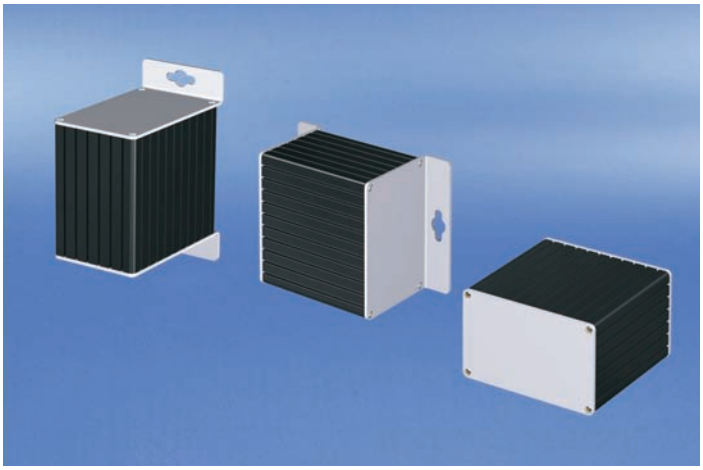

04812002

- Accommodates 4 standardised PCBs (height 100 mm, depth 160 mm) or rotated by 90° to accomodate 8 non-standardised PCBs (height 60 mm, depth 160 mm)
- PCB thickness 1.6 mm, spacing 15.24 mm (2 HP)
- Different versions
  - Wall mounting
  - Desktop version

NEW

Delivery comprises

Item	Qty	Description
1	1	Case, rectangular, Al extrusion
2	2	Lateral cover plate, 2.5 mm, anodised
3	1	Fixing material kit, user manual

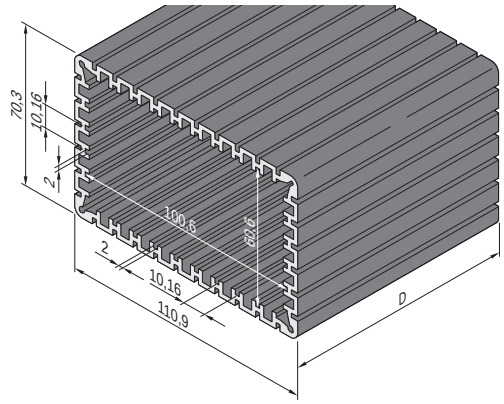

04812050

Dimensions of body tube

Order Information

Description	Length mm	Part no.
Case, rectangular, Al extrusion, black anodised; lateral cover plates anodised, thickness 2.5 mm (desktop version)	160.5	24814-024
Case, rectangular, Al extrusion, anodised; lateral cover plates anodised, thickness 2.5 mm (for wall mounting on long side)	160.5	24814-025
Case, rectangular, Al extrusion, anodised; lateral cover plates anodised, thickness 2.5 mm (for wall mounting on short side)	160.5	24814-027
Accessories		
Rubber foot for desktop version, PU 4 pieces		21102-025

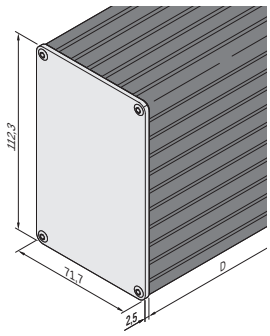

04812056

Desktop version

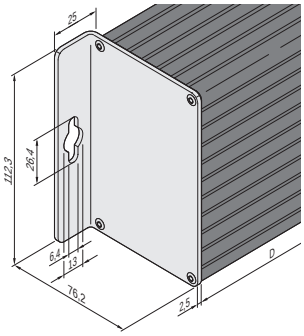

04812055

Wall mounting
(on long side of rectangle)

Note

- **On request:**
  - Other case lengths
  - Cut-outs for LEDs, switches, connectors or couplings (USB, SUB-D)
  - Individual printing on cover plate

For further information www.schroff.biz/oneclick
oneClick search code = Part no.

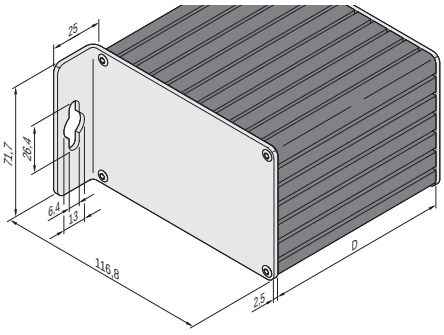

04812054

Wall mounting (on short side of rectangle)

PCB accessories

PCB handle C

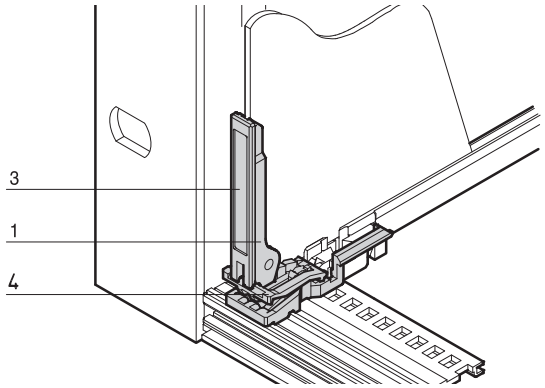

BPA45909

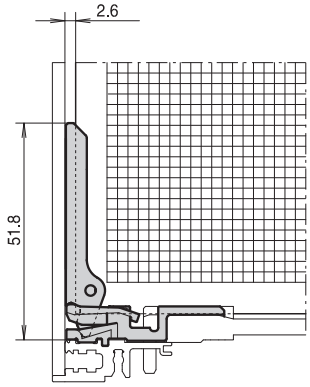

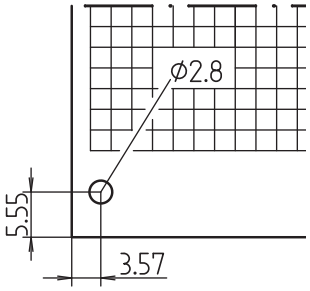

BPA45910 BPA45910

- For europacPRO, multipacPRO, ratiopacPRO, propacPRO and compacPRO
- Mounts behind front panel
- Insertion and extraction
- Can be labelled
- In accordance with IEC 60297-3-102

Order Information

Item	Description	Material	Colour	Qty/PU	Part no.
1	PCB handle C	PBT, UL 94 V-0	red	10	24560-378
3	Identification strip (1 sheet = 438 pieces)	Polyester film, self-adhesive	white/ matt	1	60817-228

Note

- Minimum spacing of guide rail 3 HP
- for board thickness 1.6 mm
- Please order PCB retainer C separately

For further information www.schroff.biz/oneclick
oneClick search code = Part no.

PCB retainer C

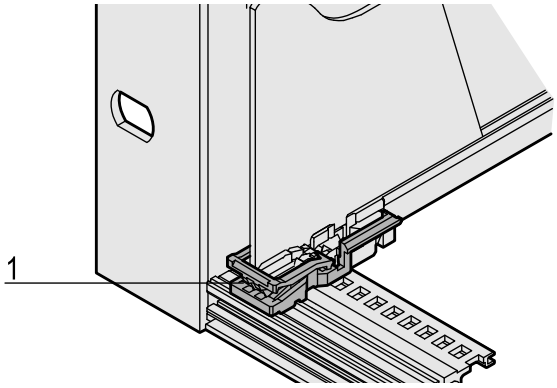

06002057

- For europacPRO, multipacPRO, ratiopacPRO, propacPRO and compacPRO
- Can also be used without PCB handle
- Application on top and bottom horizontal rail with "accessory" type guide rail

Order Information

Item	Description	Material	Colour	Qty/PU	Part no.
1	PCB retainer C	PBT, UL 94 V-0	red	10	24560-377

Note

- Minimum spacing of guide rail 3 HP
- Cannot be used with propac, compac, inpac cases

For further information www.schroff.biz/oneclick
oneClick search code = Part no.

PCB handle B1

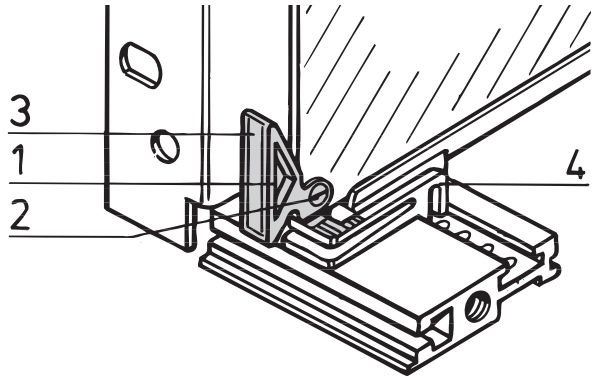

B42729

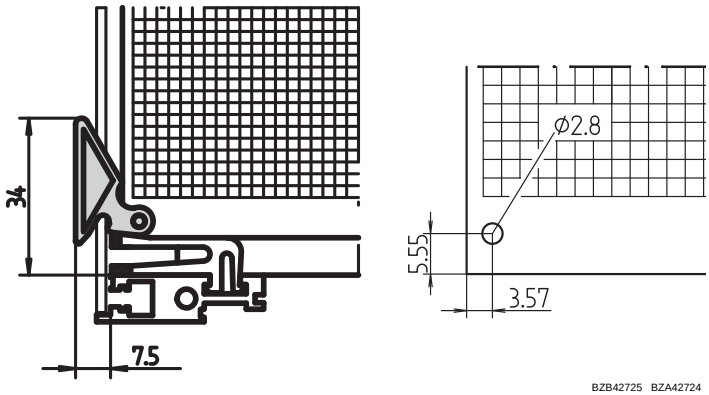

BZB42725 BZA42724

- For bolting or riveting to 1.6 mm PCBs (top and bottom)
- Extraction function only
- Can be labelled

Order Information

Item	Description	Material	Colour	Qty/PU	Part no.
1	PCB handle, bolt-on	PBT, UL 94 V-0	red	1 piece (SPQ 10)	60817-067
1a	PCB handle for rivet fitting	PBT, UL 94 V-0	red	1 piece (SPQ 10)	60817-072
2	Countersunk screw	St, nickel-plated, DIN 965	–	100	21100-515
2a	Tubular rivet	Brass, DIN 7340	–	100	21100-076
3	Indentification strip	Polyester film, self-adhesive	white	100	21100-569

SPQ (standard pack quantity): Part number includes 1 piece, but delivery is exclusively made in standard pack quantity: Please order at least 10 pieces PCB handles or a multiple

Note

- Can be used with PCB retainer B1, B2, see page 7.104

For further information www.schroff.biz/oneclick
oneClick search code = Part no.

PCB handle B2

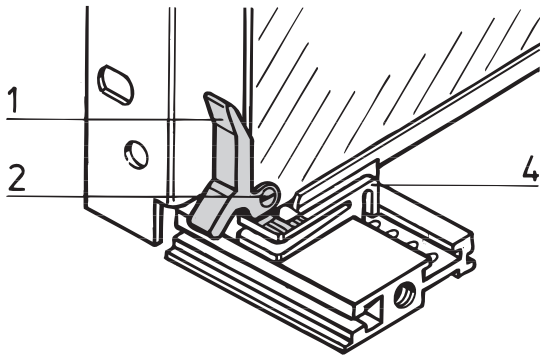

BZA46427

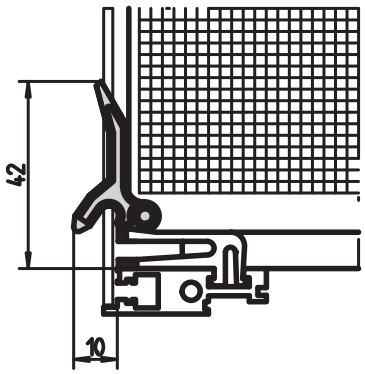

BZB42726

- For bolting to PCBs (1.6 mm); can only be used on bottom horizontal rail
- Extraction function only
- Can be labelled

Order Information

Item	Description	Material	Colour	Qty/PU	Part no.
1	PCB handle	PBT, UL 94 V-0	red	1 piece (SPQ 10)	60817-055
2	Slotted cheesehead screw, M2.5 × 6	St, nickel-plated	–	100	21100-146

SPQ (standard pack quantity): Part number includes 1 piece, but delivery is exclusively made in standard pack quantity: Please order at least 10 pieces printed circuit board handles or a multiple

Note

- Can be used with PCB retainer B1, B2, see page 7.104

For further information www.schroff.biz/oneclick
oneClick search code = Part no.

PCB accessories

PCB retainer B1, B2

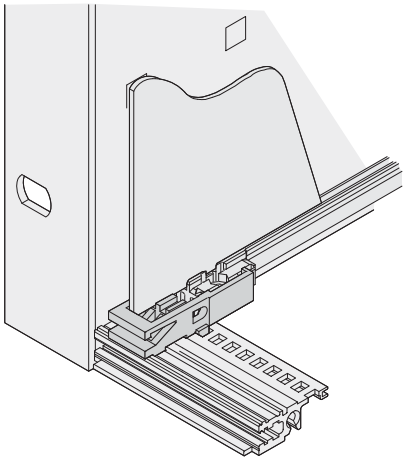

06109050

- For fixing PCB
- Can also be used without PCB handle
- Application on top and bottom horizontal rail
- Suitable for PCB handles B1 and B2

Order Information

Description	Material	Colour	Qty/PU	Part no.
PCB retainer B1, B2	PPO, UL 94 V-0	red	10	24560-381

Note

- Groove width 2 mm

PCB handle, snap-on

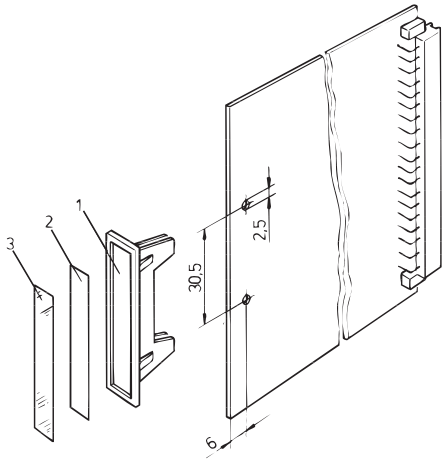

A3261

- For board thickness 1.6 mm

Order Information

Item	Description	Material	Colour	Qty	Part no.
1	PCB handle, can be locked	PPE, UL 94 V-1	grey	1 piece (SPQ 10)	60800-039
1	PCB handle, can be locked	PPE, UL 94 V-1	red	1 piece (SPQ 10)	60800-045
Transparent strips Item 3, 50 × 5 × 0.3 mm, PU 100 pieces					69000-007

SPQ (standard pack quantity): Part number includes 1 piece, but delivery is exclusively made in standard pack quantity: Please order at least 10 pieces PCB handles or a multiple

PCB handle, can be bolted/riveted

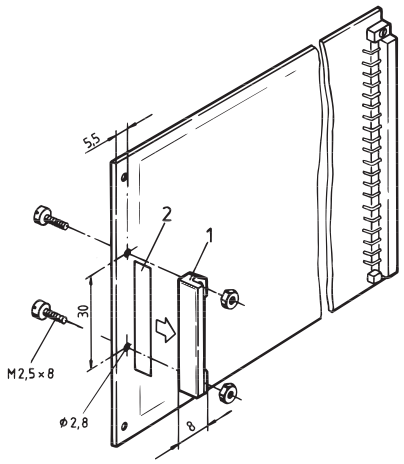

A4-1302

- For board thickness 1.6 mm

Order Information

Item	Description	Material	Colour	Qty	Part no.
1	PCB handle, can be bolted/riveted	PC	yellow	1 piece (SPQ 10)	60817-050
2	PCB handle, can be bolted/riveted	PC	red	1 piece (SPQ 10)	60817-051
1	PCB handle, can be bolted/riveted	PC	green	1 piece (SPQ 10)	60817-052
Identification strip Item 2, carton, white, 37.5 × 7 × 0.15 mm, 1 sheet = 105 pieces					69000-969
Pozidrive panhead screw M2.5 × 8, St, nickel-plated, PU 100 pieces					21101-069
Hexagonal nut A 2.5, nickel-plated, PU 100 pieces					21100-144
Tubular rivet, form B (roundhead) B 2.5 x 0.25 x 5, St/brass, raw, DIN 7340, PU 100 pieces					21100-459

SPQ (standard pack quantity): Part number includes 1 piece, but delivery is exclusively made in standard pack quantity: Please order at least 10 pieces PCB handles or a multiple

PCB accessories

PCB pocket

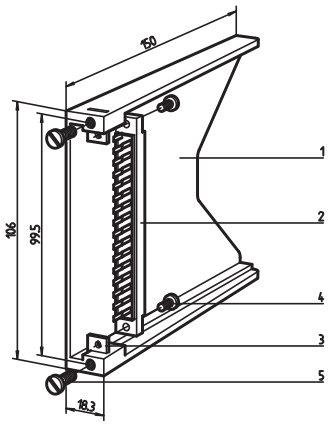

LKA42605

Retention bracket (DIN 41612)

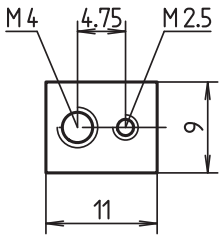

LKA42606

- Accepts PCBs in euroboard format, 100 × 160 mm
- For female connectors to EN 60603 (DIN 41612)

Delivery comprises (kit)

Item	Qty	Description
1	1	PCB pocket, PBT (P), grey, UL 94 V-0
3	2	Retention bracket, St, 2 mm, nickel-plated
4	2	Cheesehead screw M2.5 × 6, St, nickel-plated
5	2	Cheesehead screw M4 × 12, St, nickel-plated

Order Information

Item	Description	Material	Colour	Qty/PU	Part no.
1	PCB pocket	PBT (P)	grey	1	20800-032

Note

- Connector (item 2) see page 11.2

For further information www.schroff.biz/oneclick
oneClick search code = Part no.

PCB strengthening (9 U)

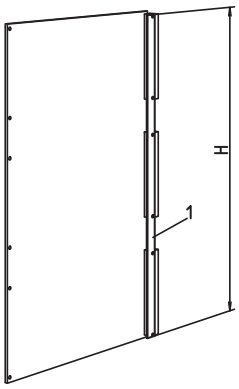

LKA42609

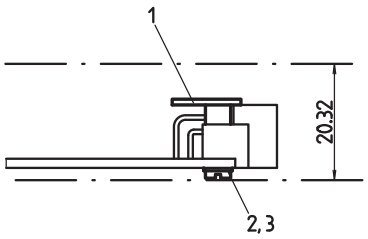

LKA42593

- Protects large PCBs from bending
- Creates an additional crossbar (corresponding to IEEE recommendations, P 896, Nubus, Multibus® II etc.) that links all connectors mecanically
- Fixing points match connectors to EN 60603 (DIN 41612), types B, R, C and D

Delivery comprises (kit)

Item	Qty	Description
1	1	PCB strengthening, Al extrusion, anodised, cut edges plain; separator, stainless steel, riveted on
2	6	Cheesehead screw M 2.5 × 12, St, nickel-plated
3	6	Washer 2.6, St, nickel-plated

Order Information

Description	Height H mm	Part no.
For 9 U PCBs	361.6	20809-441

PCB covers

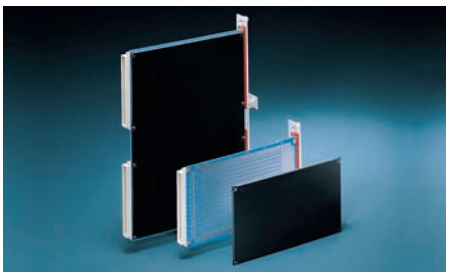

11092008

- Covers to protect solder side of board, see page 7.62

For further information www.schroff.biz/oneclick
oneClick search code = Part no.

Individual components

PCB support for static trapeziform handle

Fixing parts for extractor handles in key form 2

Drill hole dimensions on PCB

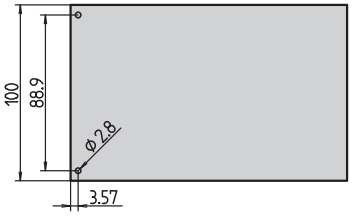

3 HE

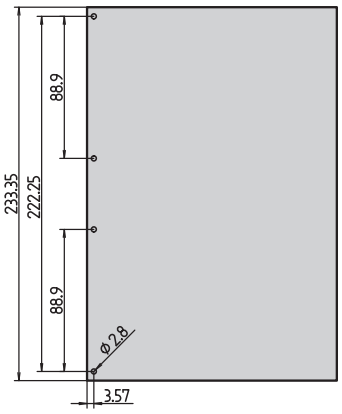

6 HE

bga43076 bga43077

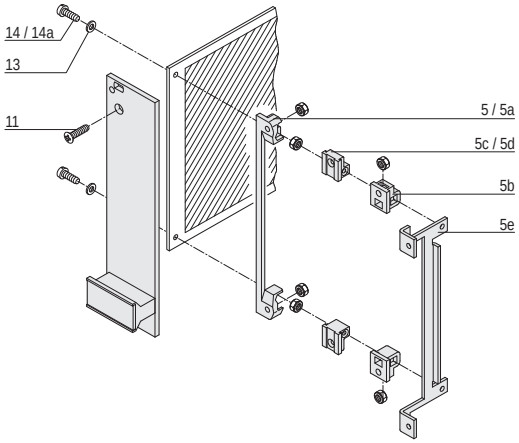

bza46430

Fixing parts	Item		Required quantity 3 U	Required quantity 6 U	Qty/PU	Part no.
PCB bracket 4 clearance holes for front panel/PCB fixing, 4 recesses for hexagon nuts; PBT, UL 94 V-0, red	5	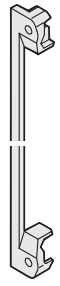	1	2	1 piece (SPQ 10)[1)]	60807-011
PCB bracket 4 threads M2.5 for front panel/PCB fixing, PBT, UL 94 V-0, grey, 1 piece	5a	AZA45177	1	2	1 piece (SPQ 10)[1)]	60807-211
PCB bracket Clearance hole for front panel fixing, with recess for hexagon nut, drill hole for self-tapping screw for PCB fixing, PBT, UL 94 V-0, grey, 1 piece	5b	 AZA45177	2	4	1 piece (SPQ 10)[1)]	60807-183
PCB bracket 2 threads M2.5 for front panel/PCB fixing, die-cast zinc, 1 piece	5c	 06707050	2	4	1 piece (SPQ 10)[1)]	60807-181
PCB bracket Thread M2.5 for front panel fixing, clearance hole for PCB fixing, die-cast zinc, 1 piece	5d	 06707050	2	4	1 piece (SPQ 10)[1)]	60807-203
PCB bracket 4 threads M2.5 for fixing front panel/PCB for recessed PCB mounting (20 mm), mounting depth 192.24 mm, St, zinc-plated; not for europacPRO, multipacPRO, ratiopacPRO, propacPRO or compacPRO, 1 piece	5e	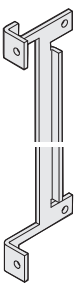 AZA46586	1	2	1 piece (SPQ 10)[1)]	30808-871

1) SPQ (standard pack quantity): Part number includes 1 piece, but delivery is exclusively made in standard pack quantity (SPQ); please order at least the SPQ quantity or a multiple

Part number in bold face type: ready for despatch within 2 working days
Part number in normal type: ready for despatch within 10 working days

Assembly parts

- Quick-release fasteners
- Sleeves
- Screws
- Cage nuts
- Tools

Quick-release fasteners

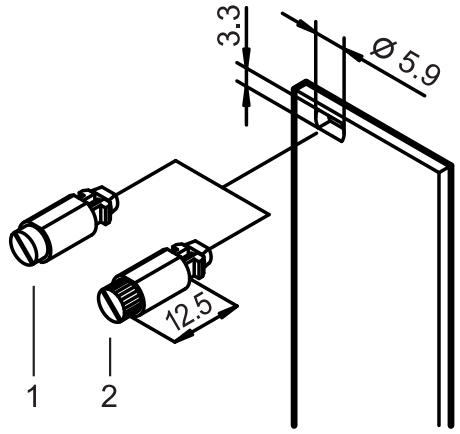

06702062

- Vibration and shock proof
- 1/4 rotary lock with defined stop
- Detection of fastening position through slot position

Delivery comprises

Qty	Description
1	Locking pin, St, locking, Zn die-cast
1	Press-in sleeve, POM

Order Information

Item	Description	Qty/PU	Part no.
1	With slotted head, grey	100	21101-847
1	With slotted head, black	100	21101-848
2	With knurled and slotted head, grey	100	21101-849
2	With knurled and slotted head, black	100	21101-850

Note

Quick-release fasteners: mounting without threaded insert

Sleeves

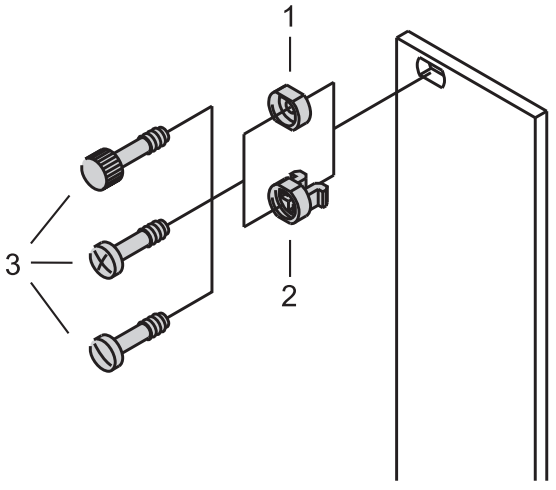

06702061

Order Information

Item	Description	Application	Qty/PU pieces	Part no.
2	Plastic sleeve, PA, grey	for unshielded front panels	100	21100-464
2	Plastic sleeve, PA, black	for unshielded front panels	100	21100-591
1	Metal sleeve, brass, nickel-plated	for shielded front panels	10	21100-659
1	Metal sleeve, brass, nickel-plated	for shielded front panels	100	21100-660
1	Metal sleeve, brass, black	for shielded front panels	10	21100-885
1	Metal sleeves, stainless steel	for shielded front panels	10	21100-661
1	Metal sleeves, stainless steel	for shielded front panels	100	21100-662
Accessories				
Pozidrive/slotted collar screw M2.5 × 11, St, nickel-plated, PU 100 pieces				21100-748
Pozidrive/slotted collar screw M2.5 x 12.3, St, nickel-plated, PU 100 pieces				21101-101

Note

- Metal sleeves must be pressed-in into front panels
- Sleeve does not fit 2 HP wide front panels

Assembly parts

Collar screws

	Description	Material	Dimension	Qty/PU	Part no.
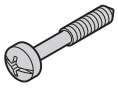 AZA46586	Pozidrive/slotted collar screw	St, nickel-plated	M2.5 x 11	100	21100-748
		St, zinc-plated, black	M2.5 x 11	100	21100-749
		Stainless steel, with slot	M2.5 x 11	100	21101-323
		St, nickel-plated	M2.5 x 12.3	100	21101-101
		St, zinc-plated, black	M2.5 x 12.3	100	21101-102
		Stainless steel	M2.5 x 12.3	100	21101-906
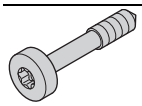 AZA45941	Torx collar screw	St, nickel-plated	M2.5 x 12.3	100	21101-782
		St, zinc-plated, black	M2.5 x 12.3	100	21101-783
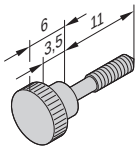 06709050	Collar screw with knurled head	Brass, nickel-plated	M2.5 x 11	50	21100-268
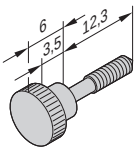 06709051		Brass, nickel-plated	M2.5 x 12.3	100	21101-749
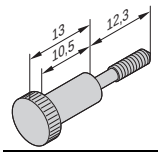 06709052		Brass, nickel-plated	M2.5 x 12.3	100	21101-909
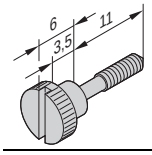 06709053	Slotted collar screw with knurled head	Brass, nickel-plated	M2.5 x 11	100	21101-106

Part number in bold face type: ready for despatch within 2 working days
Part number in normal type: ready for despatch within 10 working days

Assembly parts

Countersunk screws

	Description	Material	Dimension	Qty/PU	Part no.
 aza45182	Pozidrive countersunk screw	St, nickel-plated	M2.5 x 6	100	21100-515
		St, nickel-plated	M2.5 x 12	100	21100-507
 AZA46585	Torx countersunk screw	St, zinc-plated	M4 x 5	100	24560-139
		St, zinc-plated	M4 x 14	100	24560-145
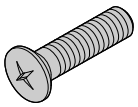 06702056	Raised Pozidrive countersunk screw	St, nickel-plated	M2.5 x 8	100	21100-429
		St, nickel-plated	M2.5 x 10	100	21100-500
		St, zinc-plated, black	M2.5 x 10	100	21100-649
		St, nickel-plated	M3 x 8	100	21100-542
		St, zinc-plated, black	M3 x 8	100	21100-648
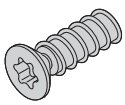 06707057	Torx countersunk screw, self-tapping	St, zinc-plated	2.5 x 7.7	100	24560-158

Screws for plug-in units

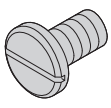
06706053

Order Information

Description	Qty/PU	Part no.
Slotted flathead screw, 6-32 UNC x 6	100	21100-712

Panhead screws

	Description	Material	Dimension	Qty/PU	Part no.
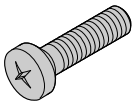 06702057	Pozidrive panhead screw	St, nickel-plated	M2.5 x 5	100	21101-314
		St, nickel-plated	M2.5 x 6	100	21101-219
		St, nickel-plated	M2.5 x 8	100	21101-069
		St, nickel-plated	M2.5 x 10	100	21101-220
		St, nickel-plated	M2.5 x 12	100	21101-221
		St, nickel-plated	M2.5 x 16	100	21101-222
		St, zinc-plated	M5 x 12	100	21100-788
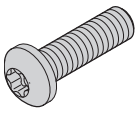 AZA45940	Torx panhead screw	St, zinc-plated	M2.5 x 6	100	24560-159
		St, nickel-plated	M2.5 x 7	100	24560-147
		St, nickel-plated	M2.5 x 10	100	24560-148
		St, nickel-plated	M2.5 x 12	100	24560-161
		St, nickel-plated	M2.5 x 14	100	24560-162
		St, zinc-plated	M4 x 6	100	24560-135
		St, zinc-plated	M4 x 6	100	24560-151
		St, zinc-plated	M4 x 10	100	24560-155
		St, zinc-plated	M4 x 14	100	24560-130
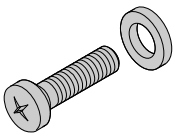 06702051	Screw + securing washer (PA)	St, nickel-plated	M2.5 x 12	100	21100-777
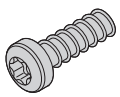 06707058	Torx panhead screw, self-tapping	St, zinc-plated, black	2.5 x 7.3	100	24560-157
		St, zinc-plated	2.5 x 9.3	100	24560-141

Part number in bold face type: ready for despatch within 2 working days
Part number in normal type: ready for despatch within 10 working days

Assembly parts

Grub screws

	Description	Material	Dimension	Qty/PU	Part no.
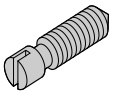 06702053	Grub screw	Stainless steel	M2.5 x 9	100	21101-359
		St, nickel-plated	M2.5 x 8	100	21100-276
		St, zinc-plated	M3.0 x 8	100	21100-646

Washers

	Description	Material	Dimension	Qty/PU	Part no.
 AZA45178	Washer	Plastic, PA	2.7 x 5 x 1	100	21101-121
		Plastic, PA	2.8 x 6,3 x 2	100	21101-964
		St, nickel-plated	A2.7 DIN 125	100	21100-721
 AZA45180	Shakeproof washer	St, nickel-plated	A 2.6	100	21100-142

Nuts

	Description	Material	Dimension	Qty/PU	Part no.
 AZA43239	Hexagon nut	St, nickel-plated	M2.5	100	21100-144
 06707050	Square nut	St, nickel-plated	M2.5	100	21100-359
 AZA45921	Square nut	St, zinc-plated	M4	100	24560-140

Tubular rivet

	Description	Material	Dimension	Qty/PU	Part no.
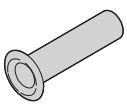 06706050	Tubular rivet, form B (roundhead)	St/brass, raw	B 2.5 x 0.25 x 5	100	21100-459

Assembly tools

Order Information

	Description	Application	Dimension	Qty/PU	Part no.
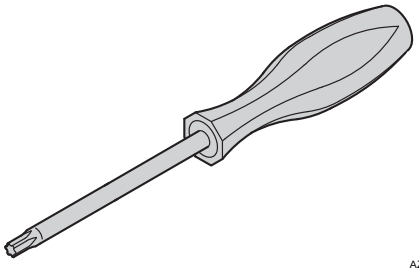 AZA45925	Torx screwdriver	For M2.5 screw	T8	1	64560-026
		For M4 screw	T20	1	64560-027
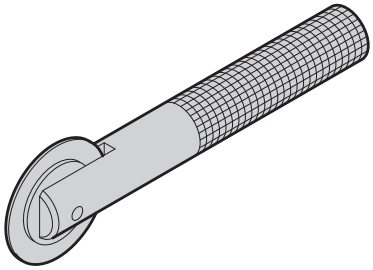 aza45938	Assembly tool	Exclusively to fix stainless steel EMC gaskets in horizontal rails	–	1	24560-271
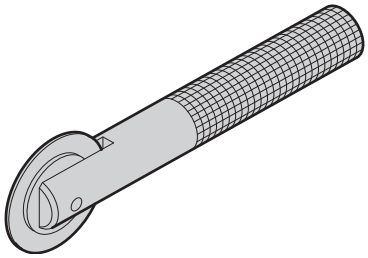 aza45937	Assembly tool	To fix stainless steel EMC gaskets on front panels with lateral slot	–	1	24560-270

Note

- Assembly tool to insert keying/coding pegs in guide rails is available on request

Measuring tape



32506001

- Measuring tape with cm, U-, HP-division (length 2 m)
- Plastic housing, metal measuring tape with automatic collection

Order Information

Description	Qty/PU	Part no.
Measuring tape	1	89009-001

For further information www.schroff.biz/oneclick
oneClick search code = Part no.



SCHROFF GMBH, LANGENALBER STRASSE 96–100, D-75334 STRAUBENHARDT WWW.PENTAIREQUIPMENTPROTECTION.COM

39601-641 © 2012 Pentair Equipment Protection