


Schroff®

# MAIN CATALOG

EQUIPMENT PROTECTION SOLUTIONS | 24TH EDITION | OCTOBER 2012

## 07 Front panels, plug-in units

Overview . . . . . 0
Cabinets . . . . . 1
Wall mounted cases . . . . . 2
Accessories for cabinets and wall mounted cases 3
Climate control 4
Desk-top cases 5
Subracks/ 19" chassis . . . 6
Front panels, plug-in units . . 7
Systems . . . . . 8
Power supply units . . . . . 9
Backplanes . . 10
Connectors, front panel component system . . . . . 11
Appendix . . . . 12



## Front panels

- Extensive standard range
- Individual modification to customer requirements: drill holes, cut-outs
- Individual printing
- Front Panel Express



## Plug-in units

- Front panels with handles in various designs
  - Extensive standard range
  - Individual modification to customer requirements: drill holes, cut-outs
  - Individual printing
  - Front Panel Express



36106003 (09292001 04612001)

Overview .... 7.0
Front panels . 7.2
Plug-in units . 7.16
Frame type plug-in units . 7.64
minipac ..... 7.98
PCB accessories .. 7.102
Assembly material ..... 7.107
Modules to mount drive units
see chapter System Accessories . 8.110

## Frame-type plug-in units

- To hold and protect PCBs
- High stability
- Outstanding cooling
- With or without EMC shielding

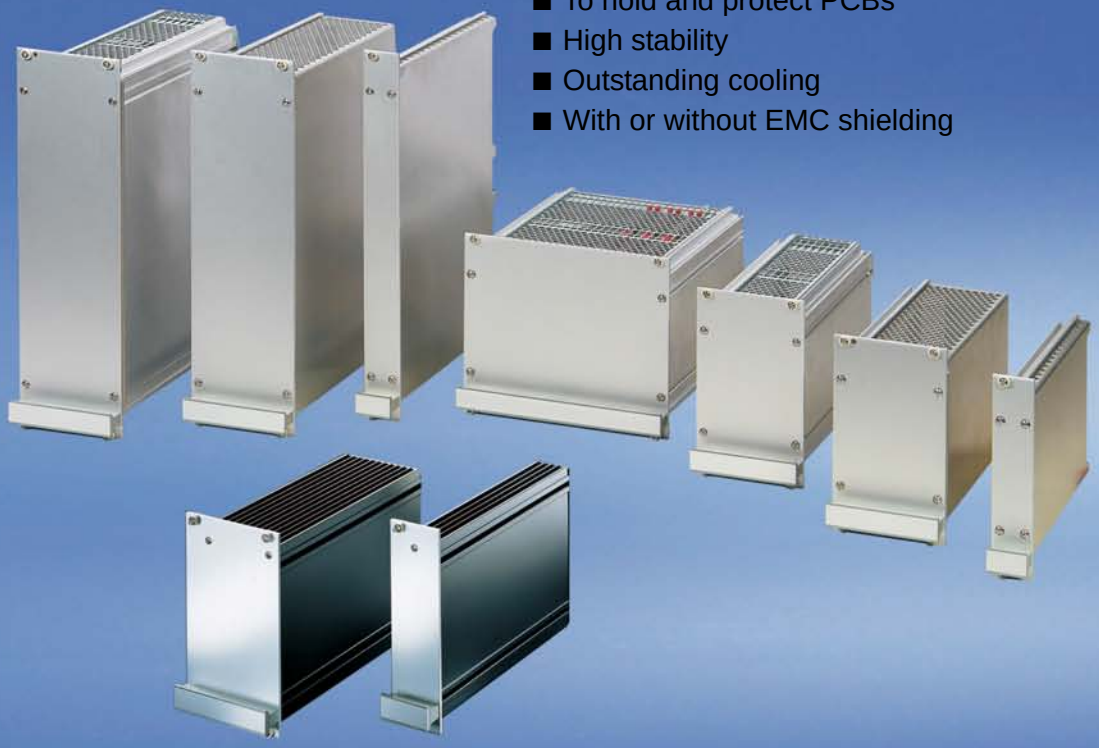

## minipac

- Convenient small case - flexible enough for all your requirements
- To accommodate non-standardised or standardised PCBs
- As desktop enclosure, for wall mounting or mounting on a DIN support rail

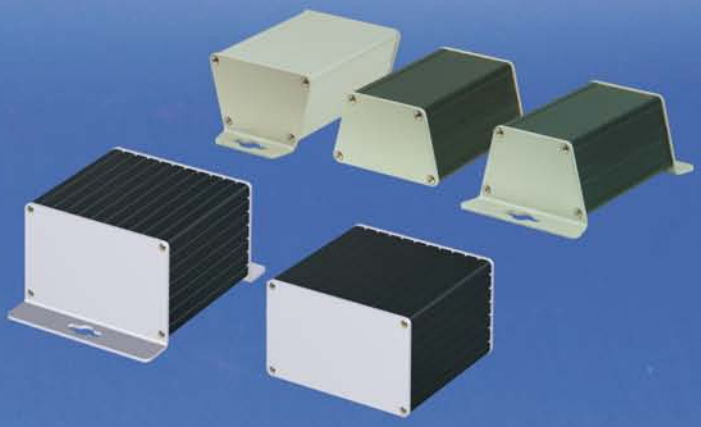

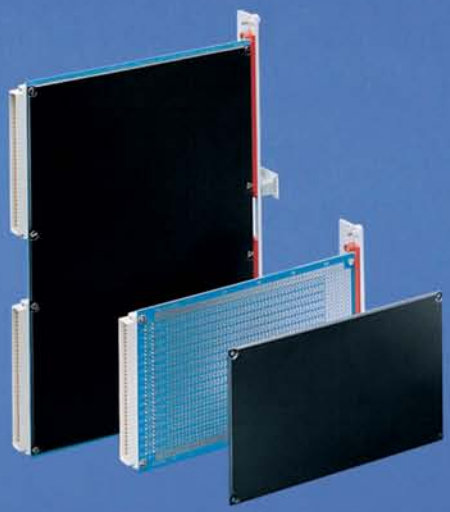

## Accessories

- Brackets, handles, covers
- Assembly material
- Tools

36106004 (04802002 04812001 11092008 04995001)

Overview . . . . . 0
Cabinets . . . . . 1
Wall mounted cases . . . . . 2
Accessories for cabinets and wall mounted cases 3
Climate control 4
Desk-top cases 5
Subracks/ 19" chassis . . . 6
Front panels, plug-in units . . 7
Systems . . . . . 8
Power supply units . . . . . 9
Backplanes . . 10
Connectors, front panel component system . . . . . 11
Appendix . . . . 12

# Front panels

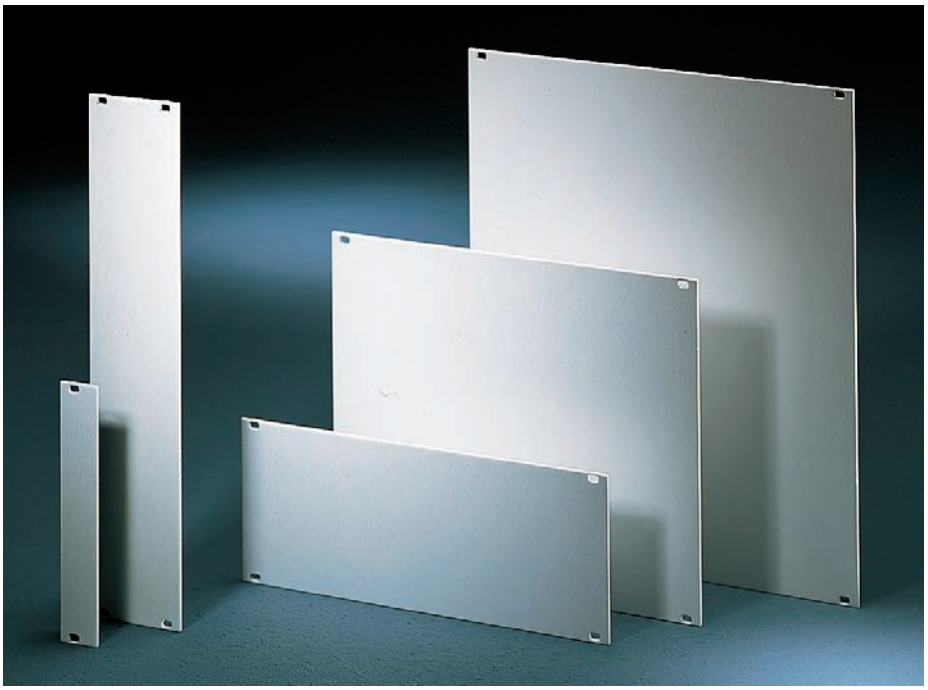

04292001

## Standards

- IEC 60297-3-101/IEEE 1101.1/10




30407004

**ServicePLUS**

**e.g. individual colouring**
**e.g. customised cut-outs**
**e.g. printing**
**e.g. mounting service**
**e.g. special dimensions**

**www.frontpanelexpress.eu**




FRONT PANEL EXPRESS



32304003

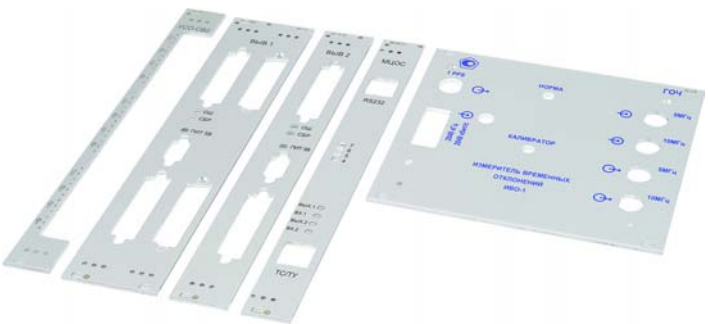

04210001 04603009

**Downloads and further important information can be found on the Internet under www.schroff.biz**

# Front panels

## Front panels for fitting in subracks, cases and systems

- **Extensive standard range with various finishes and materials (aluminium or stainless steel)**
- **Front Panel Express: Fast delivery service of customised versions (from 2 days)**
- **EMC shielding retrofittable**



04292001

### Front panels, unshielded

- Aluminium, clear anodised
- Aluminium, clear pre-anodised, cut edge untreated
- Aluminium, front anodised, rear iridescent green chromated
- Other finishes on request

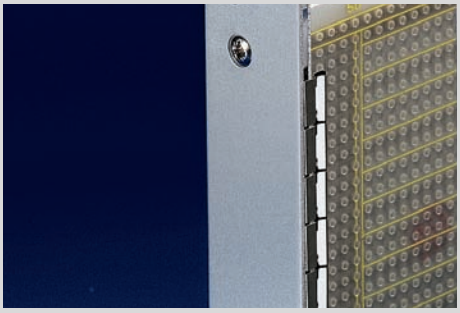

04600006

### Front panels shieldable, flat

- With lateral grooves to fit EMC gaskets (stainless steel)
- Compatible with the shielded U profile version



04602004

### Front panels, shieldable, U profile

- With lateral groove to fix a textile self-adhesive EMC gasket
- Compatible with the shielded flat version
- High robustness through U profile



04295001 04295002

### Further front panels

- Hinged/folding front panels
- Front panels with GND/earthing
- Mezzanine front panels
- AdvancedTCA front panels
- MicroTCA front panels
- AdvancedMC front panels

# Front panels

## Front panels, unshielded

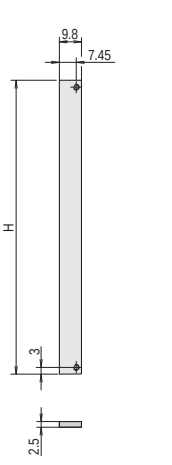


2 HP

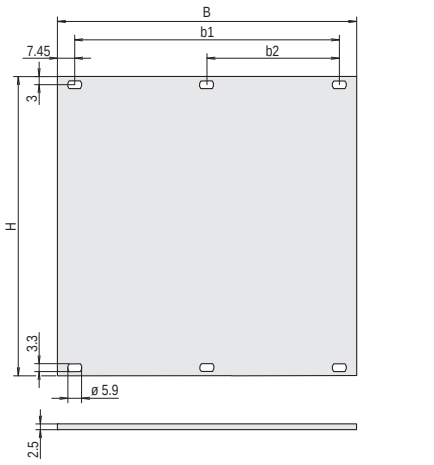


> 2 HP

- Front panel, Al, 2.5 mm
- Versions:
  - Al, anodised
  - Al, anodised, cut edges plain
  - Al, front anodised, rear iridescent green chromated

### Note

- Other sizes and finishes available on request
- Please order fixing material separately, see chapter Assemply parts, page 7.107

### Order Information

| Height | H | Width | B | b1 | b2 | Qty 1) | Anodised, cut edges plain | Anodised | Front anodised, rear colorless chromated |
|---|---|---|---|---|---|---|---|---|---|
| U | mm | HP | mm | mm | mm | | Part no. | Part no. | Part no. |
| 1 | 39.5 | 84 | 426.4 | 411.5 | 203.2 | 1 | – | – | 20850-426 |
| 2 | 84.0 | 84 | 426.4 | 411.5 | 203.2 | 1 | 30818-271 | 30807-416 | 30847-461 |
| 3 | 128.4 | 2 | 9.8 | – | – | 1 (SPQ 5)[1)] | 30810-433 | 30810-432 | 30847-470 |
| 3 | 128.4 | 3 | 14.9 | – | – | 1 (SPQ 5)[1)] | 30818-272 | 30807-508 | 30847-471 |
| 3 | 128.4 | 4 | 20.0 | – | – | 1 (SPQ 5)[1)] | 30818-273 | 30807-481 | 30838-043 |
| 3 | 128.4 | 5 | 25.0 | – | – | 1 (SPQ 5)[1)] | 30818-274 | 30807-510 | 30838-044 |
| 3 | 128.4 | 6 | 30.1 | – | – | 1 (SPQ 5)[1)] | 30818-275 | 30807-482 | 30838-045 |
| 3 | 128.4 | 7 | 35.2 | – | – | 1 (SPQ 5)[1)] | 30818-276 | 30807-509 | 30838-046 |
| 3 | 128.4 | 8 | 40.3 | 25.4 [2)] | – | 1 (SPQ 5)[1)] | 30818-277 | 30807-484 | 30838-047 |
| 3 | 128.4 | 10 | 50.5 | 35.6 | – | 1 (SPQ 5)[1)] | 30818-279 | 30807-483 | 30838-049 |
| 3 | 128.4 | 12 | 60.6 | 45.7 | – | 1 (SPQ 5)[1)] | 30818-281 | 30807-485 | 30838-051 |
| 3 | 128.4 | 14 | 70.8 | 55.9 | – | 1 (SPQ 5)[1)] | 30818-282 | 30807-501 | 30838-053 |
| 3 | 128.4 | 21 | 106.3 | 91.4 | – | 1 (SPQ 5)[1)] | 30818-289 | 30807-487 | 30838-060 |
| 3 | 128.4 | 28 | 141.9 | 127.0 | – | 1 (SPQ 5)[1)] | 30818-296 | 30807-496 | 30838-067 |
| 3 | 128.4 | 42 | 213.0 | 198.1 | 101.6 [2)] | 1 | 30818-310 | 30807-494 | 30838-081 |
| 3 | 128.4 | 63 | 319.7 | 304.8 | 157.5 | 1 | 30818-331 | 30808-067 | 30838-102 |
| 3 | 128.4 | 84 | 426.4 | 411.5 | 203.2 | 1 | 30818-352 | 30807-506 | 30838-123 |
| 4 | 172.9 | 84 | 426.4 | 411.5 | 203.2 | 1 | 30818-434 | 30807-596 | 30847-465 |
| 6 | 261.8 | 2 | 9.8 | – | – | 1 (SPQ 5)[1)] | 30818-747 | 30818-741 | 30847-472 |
| 6 | 261.8 | 4 | 20.0 | – | – | 1 (SPQ 5)[1)] | 30818-518 | 30807-778 | 30838-124 |
| 6 | 261.8 | 5 | 25.0 | – | – | 1 (SPQ 5)[1)] | 30818-519 | 30807-777 | 30838-125 |
| 6 | 261.8 | 6 | 30.1 | – | – | 1 (SPQ 5)[1)] | 30818-520 | 30807-752 | 30838-126 |
| 6 | 261.8 | 7 | 35.2 | – | – | 1 (SPQ 5)[1)] | 30818-521 | – | 30838-127 |
| 6 | 261.8 | 8 | 40.3 | 25.4 [2)] | – | 1 (SPQ 5)[1)] | 30818-522 | 30807-779 | 30838-128 |
| 6 | 261.8 | 10 | 50.5 | 35.6 | – | 1 (SPQ 5)[1)] | 30818-524 | 30807-753 | 30838-130 |
| 6 | 261.8 | 12 | 60.6 | 45.7 | – | 1 (SPQ 5)[1)] | 30818-526 | 30807-755 | 30838-132 |
| 6 | 261.8 | 14 | 70.8 | 55.9 | – | 1 (SPQ 5)[1)] | 30818-528 | 30807-758 | 30838-134 |
| 6 | 261.8 | 16 | 80.9 | 66.0 | – | 1 (SPQ 5)[1)] | 30818-530 | 30807-780 | 30838-136 |
| 6 | 261.8 | 21 | 106.3 | 91.4 | – | 1 (SPQ 5)[1)] | 30818-535 | 30807-757 | 30838-141 |
| 6 | 261.8 | 28 | 141.9 | 127.0 | – | 1 (SPQ 5)[1)] | 30818-542 | 30807-766 | 30838-148 |
| 6 | 261.8 | 42 | 213.0 | 198.1 | 101.6 [2)] | 1 | 30818-556 | 30807-764 | 30838-162 |
| 6 | 261.8 | 63 | 319.7 | 304.8 | 157.5 | 1 | 30818-577 | 30807-771 | 30838-183 |
| 6 | 261.8 | 84 | 426.4 | 411.5 | 203.2 | 1 | 30818-598 | 30807-776 | 30838-204 |
| 9 | 395.1 | 84 | 426.4 | 411.5 | 203.2 | 1 | – | – | 30847-556 |

1) SPQ (standard pack quantity): Part number includes 1 piece, but delivery is exclusively made in standard pack quantity (SPQ); please order at least the SPQ quantity or a multiple

2) This dimension is only available for "front anodised, rear iridescent green chromated" version

- Please order fixing material (sleeves, collar screws) separately, see page 7.107

## Front panels, shieldable

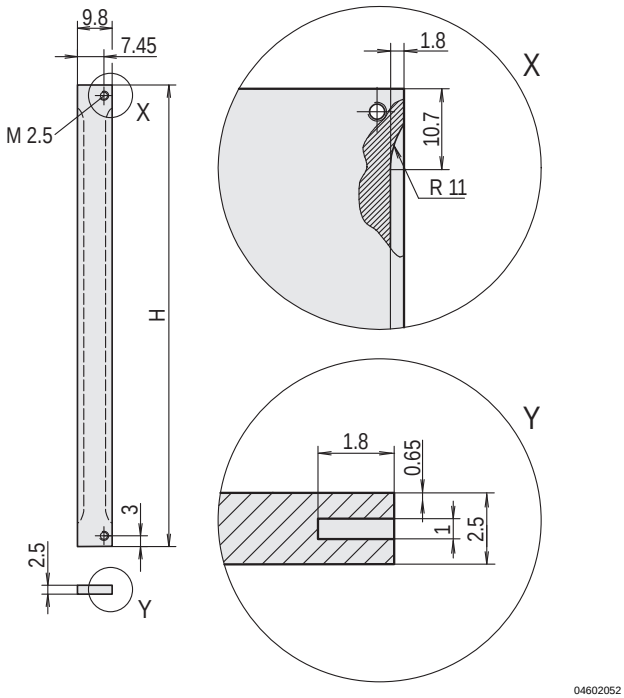


2 HP

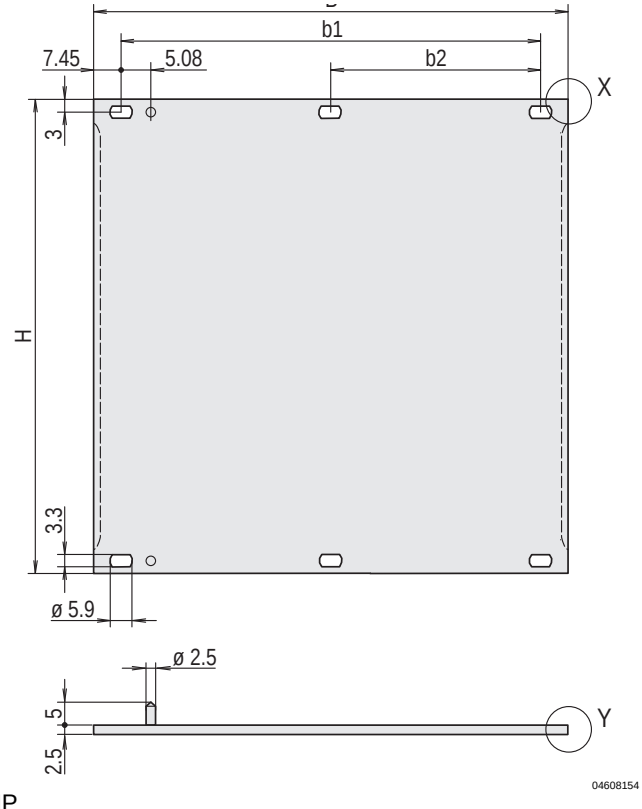


> 2 HP

- Front panel, Al, 2.5 mm, front anodised, rear iridescent green chromated, 2 alignment pins pressed-in, stainless steel
- Shielding with stainless steel EMC gasket

### Order Information

| Height H U | mm | Width HP | B mm | b1 mm | b2 mm | Align-ment pin | Qty | Part no. |
|---|---|---|---|---|---|---|---|---|
| 2 | 84 | 84 | 426.4 | 411.5 | 203.2 | – | 1 | 30846-588 |
| 3 | 128.4 | 2 | 9.8 | – | – | – | 1 (SPQ 5)[1)] | 30846-864 |
| 3 | 128.4 | 3 | 14.9 | – | – | x | 1 (SPQ 5)[1)] | 20846-425 |
| 3 | 128.4 | 4 | 20 | – | – | x | 1 (SPQ 5)[1)] | 20846-426 |
| 3 | 128.4 | 5 | 25 | – | – | x | 1 (SPQ 5)[1)] | 20846-427 |
| 3 | 128.4 | 6 | 30.1 | – | – | x | 1 (SPQ 5)[1)] | 20846-428 |
| 3 | 128.4 | 7 | 35.2 | – | – | x | 1 (SPQ 5)[1)] | 20846-429 |
| 3 | 128.4 | 8 | 40.3 | 25.4 | – | x | 1 (SPQ 5)[1)] | 20846-430 |
| 3 | 128.4 | 10 | 50.5 | 35.6 | – | x | 1 (SPQ 5)[1)] | 20846-431 |
| 3 | 128.4 | 12 | 60.6 | 45.7 | – | x | 1 (SPQ 5)[1)] | 20846-432 |
| 3 | 128.4 | 14 | 70.8 | 55.9 | – | x | 1 (SPQ 5)[1)] | 20846-433 |
| 3 | 128.4 | 21 | 106.3 | 91.4 | – | x | 1 (SPQ 5)[1)] | 20846-434 |
| 3 | 128.4 | 28 | 141.9 | 127 | – | x | 1 (SPQ 5)[1)] | 20846-436 |
| 3 | 128.4 | 42 | 213 | 198.1 | 101.6 | x | 1 | 20846-437 |
| 3 | 128.4 | 63 | 319.7 | 304.8 | 157.5 | x | 1 | 20846-438 |
| 3 | 128.4 | 84 | 426.4 | 411.5 | 203.2 | – | 1 | 30846-676 |
| 4 | 172.9 | 84 | 426.4 | 411.5 | 203.2 | – | 1 | 30846-683 |
| 6 | 261.8 | 2 | 9.8 | – | – | – | 1 (SPQ 5)[1)] | 30846-865 |
| 6 | 261.8 | 4 | 20 | – | – | x | 1 (SPQ 5)[1)] | 20846-443 |
| 6 | 261.8 | 5 | 25 | – | – | x | 1 (SPQ 5)[1)] | 20846-444 |
| 6 | 261.8 | 6 | 30.1 | – | – | x | 1 (SPQ 5)[1)] | 20846-445 |
| 6 | 261.8 | 7 | 35.2 | – | – | x | 1 (SPQ 5)[1)] | 20846-446 |
| 6 | 261.8 | 8 | 40.3 | 25.4 | – | x | 1 (SPQ 5)[1)] | 20846-447 |
| 6 | 261.8 | 10 | 50.5 | 35.6 | – | x | 1 (SPQ 5)[1)] | 20846-448 |
| 6 | 261.8 | 12 | 60.6 | 45.7 | – | x | 1 (SPQ 5)[1)] | 20846-449 |
| 6 | 261.8 | 14 | 70.8 | 55.9 | – | x | 1 (SPQ 5)[1)] | 20846-450 |
| 6 | 261.8 | 16 | 80.9 | 66 | – | x | 1 (SPQ 5)[1)] | 20846-456 |
| 6 | 261.8 | 21 | 106.3 | 91.4 | – | x | 1 (SPQ 5)[1)] | 20846-451 |
| 6 | 261.8 | 28 | 141.9 | 127 | – | x | 1 (SPQ 5)[1)] | 20846-452 |
| 6 | 261.8 | 42 | 213 | 198.1 | 101.6 | x | 1 | 20846-453 |
| 6 | 261.8 | 63 | 319.7 | 304.8 | 157.5 | x | 1 | 20846-454 |
| 6 | 261.8 | 84 | 426.4 | 411.5 | 203.2 | – | 1 | 30846-771 |
| 9 | 395.1 | 84 | 426.4 | 411.5 | 203.2 | – | 1 | 30846-859 |

Delivery is exclusively made in Standard Pack Quantity (SPQ):
Please order at least 5 pieces or a multiple.
Pricing is per individual item.

### Note

- Please order fixing material (sleeves, collar screws) separately, see page 7.107
- Please order stainless steel EMC gasket separately, see page 7.6

**For further information www.schroff.biz/oneclick**
oneClick search code = Part no.

## Stainless steel EMC gasket

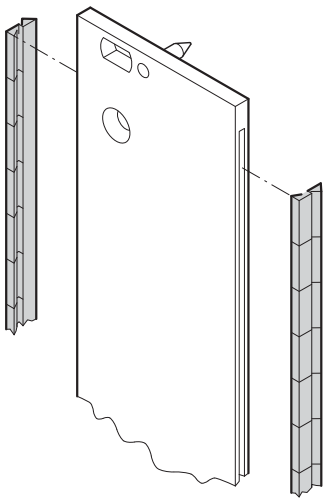

bga45760

Assembly tool

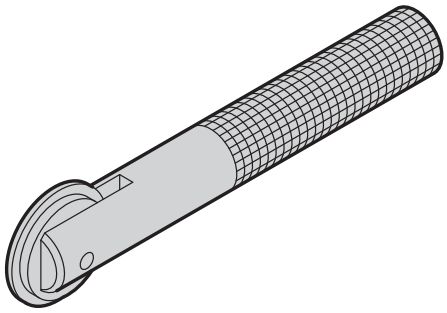

aza45937

- The stainless steel EMC gaskets are inserted into the lateral slots of the shieldable front panels (2 pieces per front panel)

### Delivery comprises

| Item | Qty | Description |
|---|---|---|
| 1 | 10/100 | EMC gasket (stainless steel) |

### Order Information

| Height U | Height mm | Qty/PU | Part no. |
|---|---|---|---|
| 2 | 52 | 10 | 21101-775 |
| 3 | 97 | 10 | 21101-705 |
| 3 | 97 | 100 | 21101-706 |
| 4 | 142 | 10 | 21101-713 |
| 4 | 142 | 100 | 21101-714 |
| 5 | 187 | 10 | 21101-777 |
| 5 | 187 | 100 | 21101-778 |
| 6 | 232 | 10 | 21101-707 |
| 6 | 232 | 100 | 21101-708 |
| 9 | 367 | 10 | 21101-709 |
| 9 | 367 | 100 | 21101-710 |
| **Assembly tool** for EMC gasket (stainless steel), 1 piece | | | 24560-270 |

### Note

- Please order assembly tool separately

**For further information www.schroff.biz/oneclick**
oneClick search code = Part no.

## Textile EMC gasket

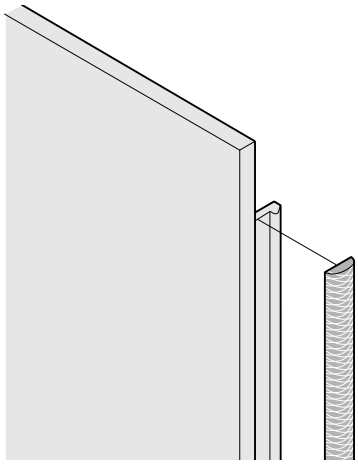

04602054

- The textile EMC gasket is glued laterally on the front panel, in the groove of the right-hand profile
- Temperature range -40 °C ... +70 °C

### Delivery comprises ()

| Item | Qty | Description |
|---|---|---|
| 1 | 10/100 | Textile EMC gasket, core: foam, sleeve: textile cladding with CuNi coating |

### Order Information

| Height U | Height mm | Qty/PU | Part no. |
|---|---|---|---|
| 2 | 52 | 10 | 21101-857 |
| 3 | 97 | 10 | 21101-853 |
| 3 | 97 | 100 | 21101-854 |
| 4 | 142 | 10 | 21101-858 |
| 5 | 187 | 10 | 21101-978 |
| 6 | 232 | 10 | 21101-855 |
| 6 | 232 | 100 | 21101-856 |
| 9 | 365 | 10 | 21101-859 |
| 9 | 365 | 100 | 21101-904 |

**For further information www.schroff.biz/oneclick**
oneClick search code = Part no.

## Front panels, U profile, shieldable

2 HP

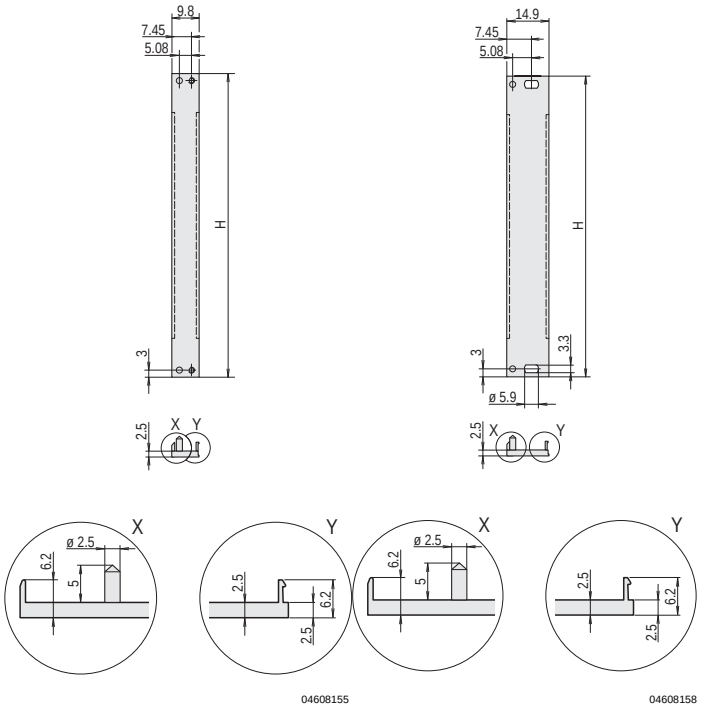


04608155

3 U




04608158

> 3 HP

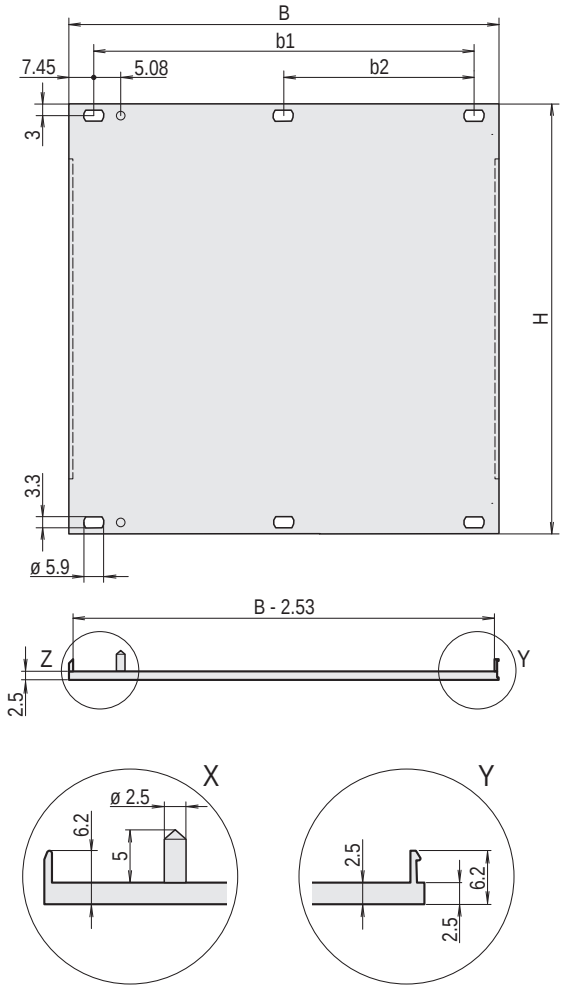


04608156

- High stability through U profile
- Front panel, U profile, Al, front anodised, rear conductive, 2 alignment pins pressed-in, stainless steel
- Differerences in the finish between 2 ... 12 HP and 14 ... 84 HP

### Order Information

| Height H U | mm | Width HP | B mm | b1 mm | b2 mm | Align-ment pin | Qty | Part no. |
|---|---|---|---|---|---|---|---|---|
| 2 | 84 | 84 | 426.4 | 411.5 | 203.2 | – | 1 (SPQ 5)[1)] | 20848-262 |
| 3 | 128.4 | 2 | 9.8 | – | – | x | 1 (SPQ 5)[1)] | 30849-001 |
| 3 | 128.4 | 3 | 14.9 | – | – | x | 1 (SPQ 5)[1)] | 30849-004 |
| 3 | 128.4 | 4 | 20 | – | – | x | 1 (SPQ 5)[1)] | 30848-354 |
| 3 | 128.4 | 5 | 25 | – | – | x | 1 (SPQ 5)[1)] | 30848-378 |
| 3 | 128.4 | 6 | 30.1 | – | – | x | 1 (SPQ 5)[1)] | 30848-380 |
| 3 | 128.4 | 7 | 35.2 | – | – | x | 1 (SPQ 5)[1)] | 30848-382 |
| 3 | 128.4 | 8 | 40.3 | 25.4 | – | x | 1 (SPQ 5)[1)] | 30848-356 |
| 3 | 128.4 | 10 | 50.5 | 35.6 | – | x | 1 (SPQ 5)[1)] | 30848-386 |
| 3 | 128.4 | 12 | 60.6 | 45.7 | – | x | 1 (SPQ 5)[1)] | 30848-358 |
| 3 | 128.4 | 14 | 70.8 | 55.9 | – | x | 1 (SPQ 5)[1)] | 20848-013 |
| 3 | 128.4 | 16 | 80.9 | 66 | – | x | 1 (SPQ 5)[1)] | 20848-015 |
| 3 | 128.4 | 21 | 106.3 | 91.4 | – | x | 1 (SPQ 5)[1)] | 20848-020 |
| 3 | 128.4 | 28 | 141.9 | 127 | – | x | 1 (SPQ 5)[1)] | 20848-027 |
| 3 | 128.4 | 42 | 213 | 198.1 | 101.6 | x | 1 | 20848-047 |
| 3 | 128.4 | 63 | 319.7 | 304.8 | 157.5 | x | 1 | 20848-068 |
| 3 | 128.4 | 84 | 426.4 | 411.5 | 203.2 | – | 1 | 20848-097 |
| 4 | 172.9 | 84 | 426.4 | 411.5 | 203.2 | – | 1 | 20848-271 |
| 6 | 261.8 | 2 | 9.8 | – | – | x | 1 (SPQ 5)[1)] | 30849-002 |
| 6 | 261.8 | 4 | 20 | – | – | x | 1 (SPQ 5)[1)] | 30848-355 |
| 6 | 261.8 | 5 | 25 | – | – | x | 1 (SPQ 5)[1)] | 30848-379 |
| 6 | 261.8 | 6 | 30.1 | – | – | x | 1 (SPQ 5)[1)] | 30848-381 |
| 6 | 261.8 | 7 | 35.2 | – | – | x | 1 (SPQ 5)[1)] | 30848-383 |
| 6 | 261.8 | 8 | 40.3 | 25.4 | – | x | 1 (SPQ 5)[1)] | 30848-357 |
| 6 | 261.8 | 10 | 50.5 | 35.6 | – | x | 1 (SPQ 5)[1)] | 30848-387 |
| 6 | 261.8 | 12 | 60.6 | 45.7 | – | x | 1 (SPQ 5)[1)] | 30848-359 |
| 6 | 261.8 | 14 | 70.8 | 55.9 | – | x | 1 (SPQ 5)[1)] | 20848-106 |
| 6 | 261.8 | 16 | 80.9 | 66 | – | x | 1 (SPQ 5)[1)] | 20848-108 |
| 6 | 261.8 | 21 | 106.3 | 91.4 | – | x | 1 (SPQ 5)[1)] | 20848-113 |
| 6 | 261.8 | 28 | 141.9 | 127 | – | x | 1 (SPQ 5)[1)] | 20848-120 |
| 6 | 261.8 | 42 | 213 | 198.1 | 101.6 | x | 1 | 20848-139 |
| 6 | 261.8 | 63 | 319.7 | 304.8 | 157.5 | x | 1 | 20848-160 |
| 6 | 261.8 | 84 | 426.4 | 411.5 | 208.3 | – | 1 | 20848-189 |
| 9 | 395.1 | 84 | 426.4 | 411.5 | 203.2 | – | 1 | 20848-280 |

1) Delivery is exclusively made in Standard Pack Quantity (SPQ): Please order at least 5 pieces or a multiple.
Pricing is per individual item.

### Note

- Differences in finish between 2 ... 12 HP and 14 ... 84 HP
  - 2 ... 12 HP: one-part U-profile
  - 14 ... 84 HP: multi-part U-profile (front panel with crimped profiles)
- Please order fixing material (sleeves, collar screws) separately, see page 7.107
- Please order textile EMC gasket separately, see page 7.6

## Front panels, bottom-hinged



04295001

- Suitable for subracks (europacPRO) and cases (ratiopacPRO, propacPRO, compacPRO)
- Front panel can be unhinged at 135° (not ratiopacPRO) opening angle
- The useable width is not restricted
- Mounts on the horizontal rails
- 2 versions:
  – unshielded
  – shielded, U front panel with textile EMC gasket

### Delivery comprises (kit)

| Item | Qty | | Description |
|---|---|---|---|
| | Unshielded | Shielded | |
| 1 | 1 | - | Front panel, hinged, Al, 2.5 mm, anodised, cut edges plain |
| 1a | - | 1 | Front panel, U profile, hinged, Al, 2.5 mm, front anodised, rear iridescent green chromated |
| 2 | 2 | 3 | Hinge, Zn die-cast, nickel-plated |
| 3 | 2 | 3 | Sleeve, PA |
| 4 | 2 | 3 | Knurled screw M2.5 x 12.3, nickel-plated |
| 5 | - | 1 | EMC textile gasket, core: foam, sleeve: textile cladding with CuNi coating |
| 6 | 1 | 1 | Assembly kit |

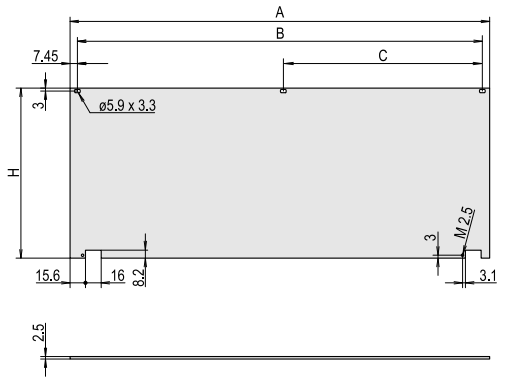


04602080

Unshielded

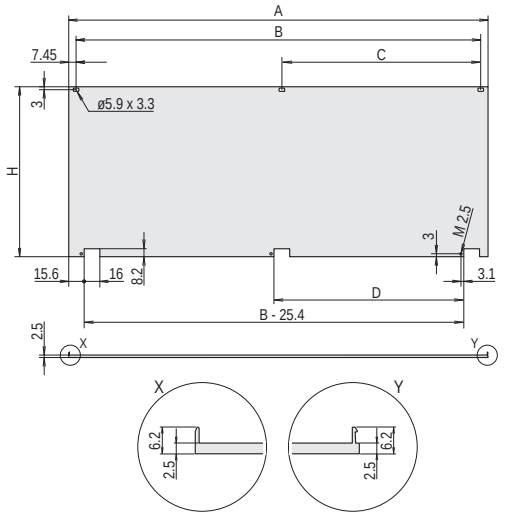


04602079

Shielded

### Note

- Unshielded: Dimension C for 84 HP only

### Order Information

| Dimensions | | | | | | | Shielded | Unshielded |
|---|---|---|---|---|---|---|---|---|
| Height | Width | A | B | C | D | H | Part no. | Part no. |
| U | HP | mm | mm | mm | mm | mm | | |
| 3 | 28 | 141.9 | 127.0 | – | – | 128.4 | 20848-608 | 20838-280 |
| 3 | 42 | 213.0 | 198.1 | 101.6 | 86.4 | 128.4 | 20848-599 | 20838-271 |
| 3 | 63 | 319.7 | 304.8 | 157.5 | 137.2 | 128.4 | 20848-600 | 20838-272 |
| 3 | 84 | 426.4 | 411.5 | 208.3 [1)] | 193.0 | 128.4 | 20848-601 | 20838-273 |
| 4 | 42 | 213.0 | 198.1 | 101.6 | 86.4 | 172.9 | 20848-605 | 20838-277 |
| 4 | 63 | 319.7 | 304.8 | 157.5 | 137.2 | 172.9 | 20848-606 | 20838-278 |
| 4 | 84 | 426.4 | 411.5 | 208.3 [1)] | 193.0 | 172.9 | 20848-607 | 20838-279 |
| 6 | 28 | 141.9 | 127.0 | – | – | 261.8 | 20848-696 | – |
| 6 | 42 | 213.0 | 198.1 | 101.6 | 86.4 | 261.8 | 20848-602 | 20838-274 |
| 6 | 63 | 319.7 | 304.8 | 157.5 | 137.2 | 261.8 | 20848-603 | 20838-275 |
| 6 | 84 | 426.4 | 411.5 | 208.3 [1)] | 193.0 | 261.8 | 20848-604 | 20838-276 |

1) Dimension with unshielded front panel



Part number in bold face type: ready for despatch within 2 working days
Part number in normal type: ready for despatch within 10 working days

## Front panel, hinged, shielded



04295002

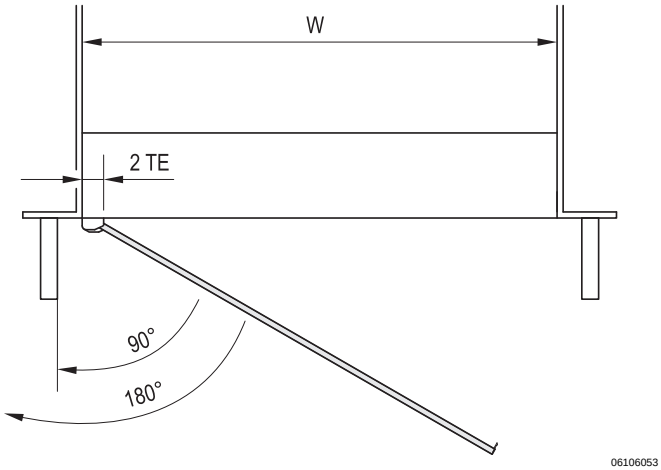


06106053

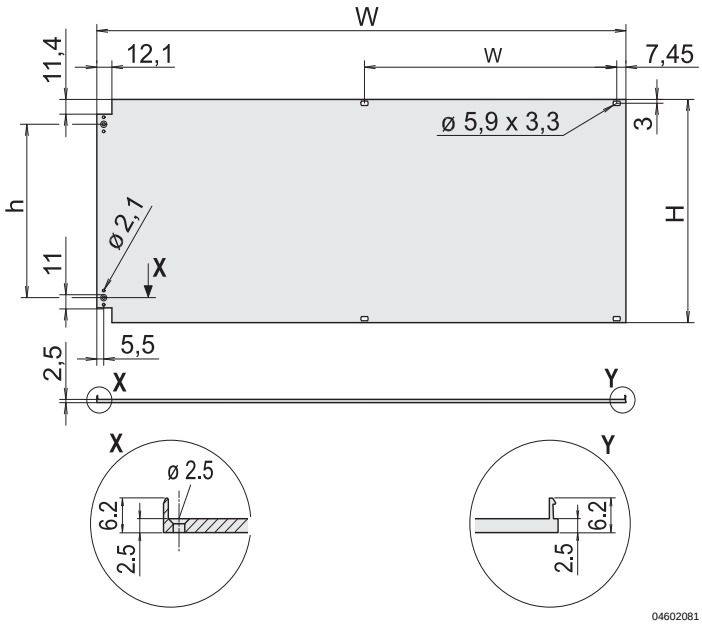


04602081

- Suitable for subracks (europacPRO) and cases (ratiopacPRO, propacPRO, compacPRO)
- Mounts on horizontal rails
- Front panel with textile EMC gasket
- Hinges can be fitted on left or right

### Delivery comprises (kit)

| Item | Qty | Description |
|---|---|---|
| 1 | 1 | Front panel, hinged, Al, 2.5 mm,<br>front anodised, rear iridescent green chromated |
| 2 | 2 | Hinge, Zn die-cast, chrome-plated |
| 3 | 1 | Textile EMC gasket,<br>core: foam, sleeve: textile cladding with CuNi coating |
| 4 | 1 | Assembly kit |

### Order Information

| Height | H | h | W | w | Part no. |
|---|---|---|---|---|---|
| U | mm | mm | mm | mm | |
| 3 | 128.4 | 89.9 | 426.4 | 203.2 | 20848-611 |
| 6 | 261.8 | 223.2 | 426.4 | 203.2 | 20848-617 |

**For further information www.schroff.biz/oneclick**
oneClick search code = Part no.

## Front panels for D-Sub connectors

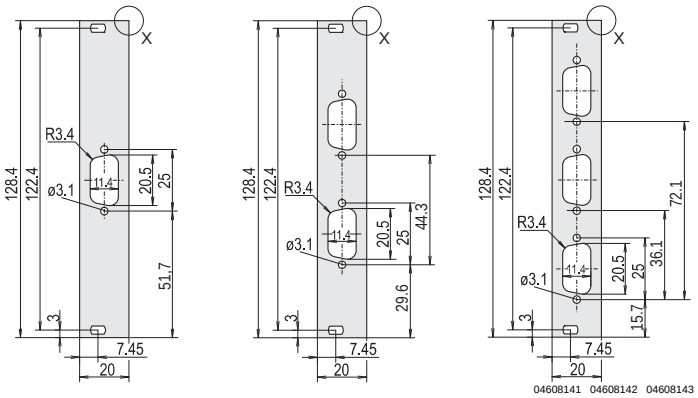


Cut-out 9-pin

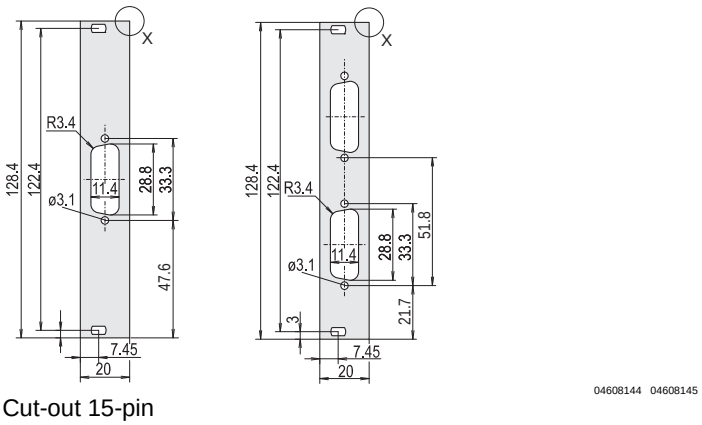


Cut-out 15-pin

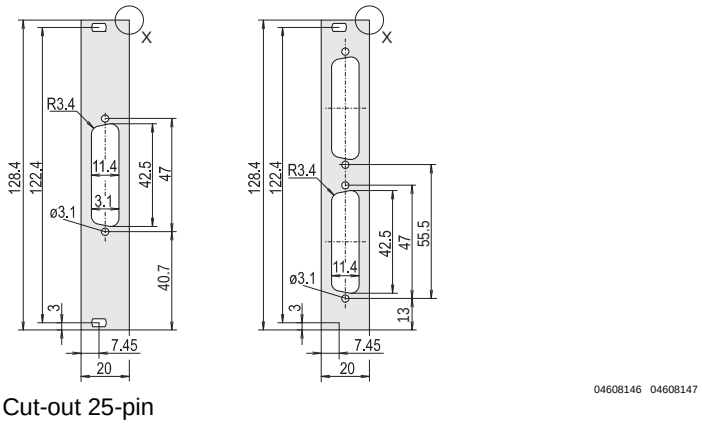


Cut-out 25-pin

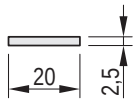


Unshielded

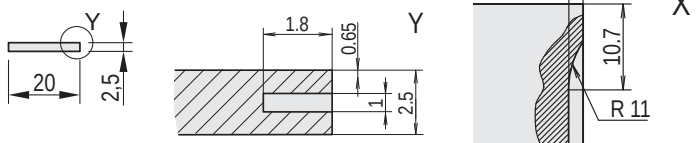


EMC gasket, stainless steel

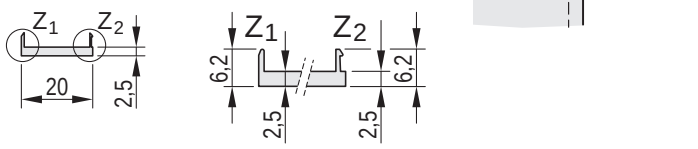


For textile EMC gasket

- 3 U/4 HP
- Aluminium, front anodised, rear irisdescent green chromated
- Shielding through: stainless steel EMC or textile EMC gasket (please order separately)

### Delivery comprises

| Item | Description |
|---|---|
| 1a | Front panel, Al, 2.5 mm, front anodised, rear irisdescent green chromated |
| 1b | Front panel, Al, 2.5 mm, front anodised, rear iridescent green chromated; for EMC stainless steel gasket |
| 1c | Front panel, U profile, Al, 2.5 mm, front anodised, rear conductive; for EMC gasket (textile) |

### Order Information

| Cut-out | Qty | Unshielded | For EMC gasket | |
|---|---|---|---|---|
| | | | Stainless steel | Textile |
| | | Part no. 1a | Part no. 1b | Part no. 1c |
| 1 × 9-polig | 1 piece (SPQ 5) | 30118-341 | 30118-348 | 30849-749 |
| 2 × 9-polig | 1 piece (SPQ 5) | 30118-344 | 30118-351 | 30849-750 |
| 3 × 9-polig | 1 piece (SPQ 5) | 30118-347 | 30118-354 | 30849-751 |
| 1 × 15-polig | 1 piece (SPQ 5) | 30118-342 | 30118-349 | 30849-752 |
| 2 × 15-polig | 1 piece (SPQ 5) | 30118-345 | 30118-352 | 30849-753 |
| 1 × 25-polig | 1 piece (SPQ 5) | 30118-343 | 30118-350 | 30849-754 |
| 2 × 25-polig | 1 piece (SPQ 5) | 30118-346 | 30118-353 | 30849-755 |

Delivery is exclusively made in Standard Pack Quantity (SPQ):
Please order at least 5 pieces or a multiple.
Pricing is per individual item.

### Note

- Please order fixing material (sleeves, collar screws) separately, see page 7.107
- Please order stainless steel EMC gasket separately, see page 7.6
- Please order textile EMC gasket separately, see page 7.6

**For further information www.schroff.biz/oneclick**
oneClick search code = Part no.



Part number in bold face type: ready for despatch within 2 working days
Part number in normal type: ready for despatch within 10 working days

# Front panels

## Front panels for Coax connectors

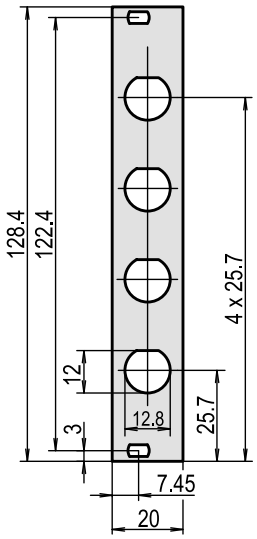


04602057

- 3 U/4 HP
- Aluminium, 2.5 mm, front anodised, rear irisdescent green chromated

### Order Information

| Description | Qty/PU | Part no. |
|---|---|---|
| Cut-out 4 x Coax, unshielded | 1 | 30118-355 |

### Note

- Please order fixing material (sleeves, collar screws) separately, see page 7.107

**For further information www.schroff.biz/oneclick**
oneClick search code = Part no.

## Front panels 3 U with GND/earthing connection



02998001

- Earthed front panel (protection class 1)

### Delivery comprises (items 1 – 3 assembled)

| Item | Qty | Description |
|---|---|---|
| 1 | 1 | Front panel 3 U, Al, 2.5 mm, front anodised, rear iridescent green chromated with GND/earthing connection |
| 2 | 4 | Plastic sleeve, PA, grey |
| 3 | 4 | Collar screws, M2.5 x 11 and 12.3 Pozidrive, St, nickel-plated |
| 4 | 1 | GND/earthing kit, length of GND/earthing cable 320 mm |

### Order Information

| Height U | Width HP | Qty | Part no. |
|---|---|---|---|
| 3 | 7 | 1 piece (SPQ 5) | 20119-159 |
| 3 | 14 | 1 piece (SPQ 5) | 20119-160 |
| 3 | 21 | 1 piece (SPQ 5) | 20119-161 |
| 3 | 28 | 1 piece (SPQ 5) | 20119-162 |
| 3 | 42 | 1 | 20119-163 |

Delivery is exclusively made in Standard Pack Quantity (SPQ):
Please order at least 5 pieces or a multiple.
Pricing is per individual item.

### Note

- Please order fixing material (sleeves, collar screws) separately, see page 7.107

**For further information www.schroff.biz/oneclick**
oneClick search code = Part no.

# Front panels

## Mezzanine front panels

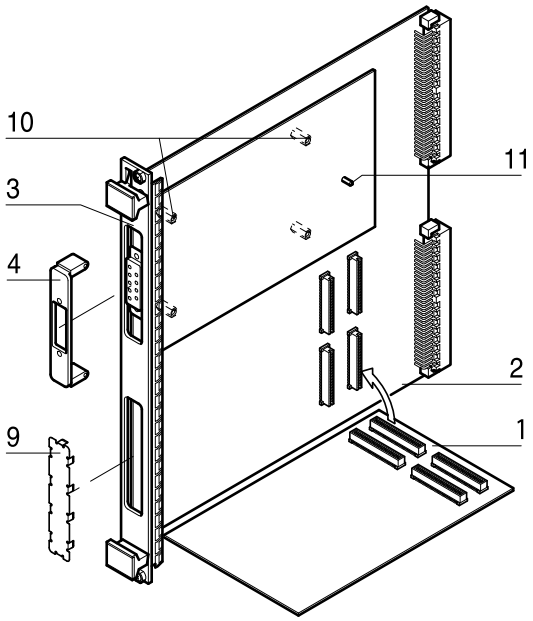


- Based on PCI 2.2 specification
  (PCI = **P**eripheral **C**omponent **I**nterface)
- In accordance with PMC mezzanine specification IEEE P 1386
- In accordance with PC-MIP mezzanine specification VITA-29

## PMC mezzanine front panel with handle, shielded

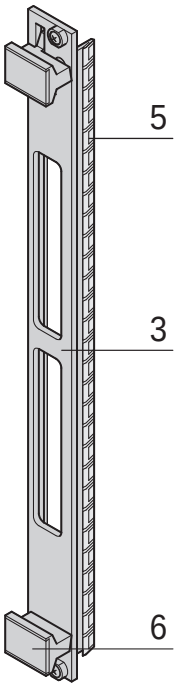


Item 3: front panel, item 5: EMC gasket, item 6: front handle

- PMC= **P**CI **M**ezzanine **C**ard
- For module size 194 x 74 mm2
- In accordance with specification IEEE P1386
  (CMC= **C**ommon **M**ezzanine **C**ard)
- 6 U/4 HP front panel with stainless steel EMC gasket and front handles

### **Delivery comprises** (assembled)

| Item | Qty | Description |
|---|---|---|
| 3 | 1 | PMC front panel, Al extrusion, 6 U, 4 HP, iridescent green chromated |
| 5 | 1 | EMC gasket (St, stainless) |
| 6 | 2 | Front handle |

### Order Information

| Item | Description | Part no. |
|---|---|---|
| 3+5+6 | Front panel with 2 cut-outs | 20897-950 |

**For further information www.schroff.biz/oneclick**
oneClick search code = Part no.

## EMC cover for PMC mezzanine front panel cut-outs



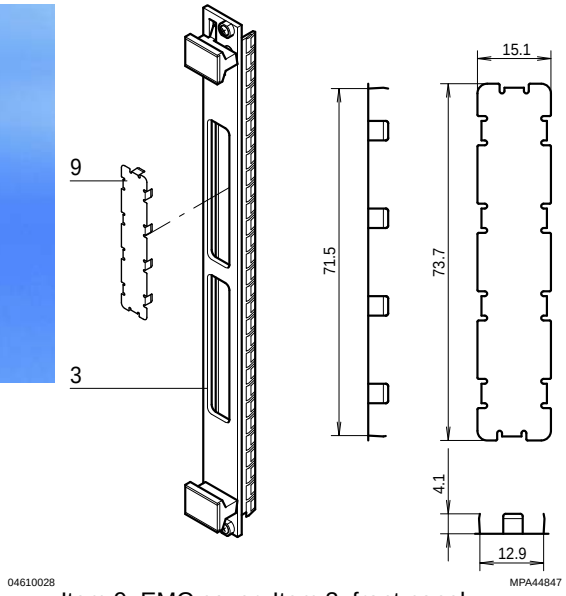


Item 9: EMC cover; Item 3: front panel

- EMC cover to close unused cut-outs in the PMC mezzanine front panels
- Material stainless steel, 0.2 mm
- Colour: black or bright

### Order Information

| Colour | Qty | Part no. |
|---|---|---|
| Black | 1 piece (SPQ 10) | 60835-024 |
| Bright | 1 piece (SPQ 10) | 60835-022 |

Delivery is exclusively made in Standard Pack Quantity (SPQ): Please order at least 10 pieces or a multiple.
Pricing is per individual item.

**For further information www.schroff.biz/oneclick**
oneClick search code = Part no.

## PMC mezzanine front panels

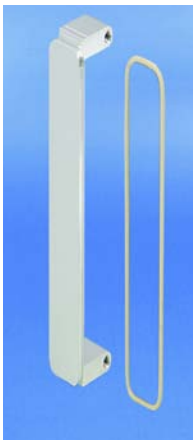

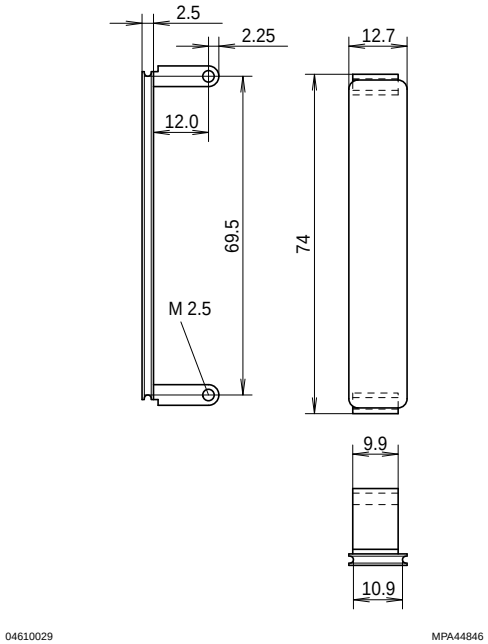


- Mezzanine front panel is fitted into PMC front panel cut-outs; EMC shielding with conductive O-ring
- Material:
  - Aluminium extrusion (anodised, contact surfaces conductive)
  - Zinc die-cast (untreated, black or chrome-plated, matt)

### Delivery comprises (kit)

| Item | Qty | Description |
|---|---|---|
| 4 | 1 | PMC mezzanine front panel, Zn die-cast or Al extrusion |
| 7 | 1 | EMC gasket (O-ring), Cho-Seal |

### Order Information

| PMC mezzaninefront panel | Qty/PU | with EMC gasket | without EMC gasket |
|---|---|---|---|
| **Material** | | **Part no.** | **Part no.** |
| Al extrusion, anodised, contact surfaces conductive | 1 | 20835-598 | – |
| Al extrusion, anodised, contact surfaces conductive | 10 | 20835-889 | 20835-899 |
| Zn die-cast, untreated | 1 | 20835-890 | – |
| Zn die-cast, untreated | 10 | 20835-893 | 20835-896 |
| Zinc die-cast, black, chromated | 1 | 20835-922 | – |
| Zinc die-cast, black, chromated | 10 | 20835-924 | 20835-931 |
| Zinc die-cast, chrome-plated, matt | 1 | 20835-923 | – |
| Zinc die-cast, chrome-plated, matt | 10 | 20835-928 | 20835-929 |
| **Cheesehead screw** M2.5 × 5 mm, PU 100 pieces | | | 21100-624 |
| **EMC gasket** O-ring, 1 piece (Standard Pack Quantity 10 pieces) | | | 60835-021 |

**For further information www.schroff.biz/oneclick**
oneClick search code = Part no.

## Spacer to mount PMC mezzanine boards

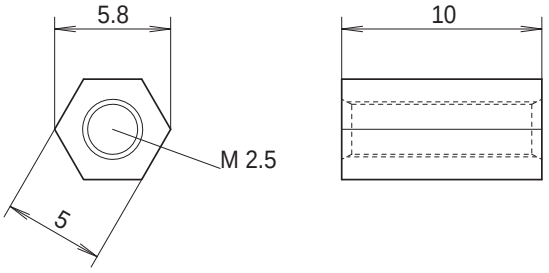


MPA44850

### Order Information

| Description | Item | Material | Qty | Part no. |
|---|---|---|---|---|
| Spacer | 10 | St, zinc-plated | 1 piece (SPQ 10) | 60897-278 |

Delivery is exclusively made in Standard Pack Quantity (SPQ):
Please order at least 10 pieces or a multiple.
Pricing is per individual item.

**For further information www.schroff.biz/oneclick**
oneClick search code = Part no.

## Voltage keying/coding pin for PMC mezzanine boards

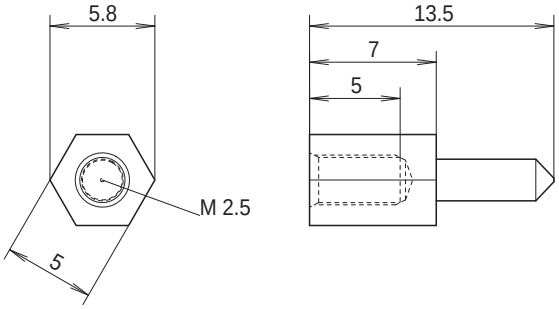


MPZU6325

- To prevent accidental damage when fitting mezzanine boards, keying/coding pins are bolted to the VMEbus boards to distinguish between 3.3 V and 5 V operation. The mezzanine boards have a hole drilled in the appropriate position. The keying/coding pin thus ensures that only mezzanine boards with the same operating voltage can be inserted. For double-height euroboards 2 pieces are required.

### Order Information

| Description | Item | Material | Qty | Part no. |
|---|---|---|---|---|
| Keying/ coding pin 5 V/3.3 V | 11 | St, zinc-plated | 1 piece (SPQ 10) | 60827-026 |

Delivery is exclusively made in Standard Pack Quantity (SPQ):
Please order at least 10 pieces or a multiple.
Pricing is per individual item.

**For further information www.schroff.biz/oneclick**
oneClick search code = Part no.

# Front panels

Overview . . . . . 0
Cabinets . . . . . 1
Wall mounted cases . . . . . 2
Accessories for cabinets and wall mounted cases 3
Climate control 4
Desk-top cases 5
Subracks/ 19" chassis . . . 6
Front panels, plug-in units . . 7
Systems . . . . . 8
Power supply units . . . . . 9
Backplanes . . 10
Connectors, front panel component system . . . . . 11
Appendix . . . . 12

# Plug-in units



04612001

## Plug-in units as kits or from individual parts

- **Handles in different designs for various applications**
- **Inserter/extractor handles for forces up to 1500 N**
- **Upgradable EMC shielding**

### Standards

- IEC 60297-3-101 / IEEE 1101.1/11
  IEC 60297-3-102 / IEEE 1101.10
  IEC 60297-3-103
  IEC 1296




30407004

**ServicePLUS**

**e.g. individual configuration and assembly**

**e.g. modifications (special colours or sizes)**

**e.g. custom solutions with modification to the plug-in units**

**www.frontpanelexpress.eu**

**Downloads and further important information can be found on the Internet under www.schroff.biz**

## Handles for plug-in units

| | | Kit | Individual components |
|---|---|---|---|
| | | Page | Page |
|  04603002 | **For CompactPCI and VME64x applications**<br>Inserter/extractor handle, type IEL/IET, allows keying/coding and insertion/extraction forces up to 700 N per pair | 7.18 | 7.19 |
|  04605005 | **For VPX, VXS, CompactPCI and VME64x applications**<br>Inserter/extractor handle, type XL, allows keying/coding and insertion/extraction forces up to 1500 N per pair | – | 7.29 |
| 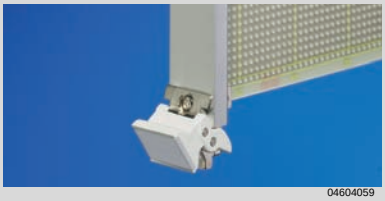 04604059 | **For e.g. VMEbus applications**<br>Trapeziform extractor handle, type 2 | 7.31 | 7.33 |
|  04692008 | **For e.g. VMEbus applications**<br>Trapeziform extractor handle, type 1 | 7.38 | 7.40 |
|  04692011 | **For Multibus® II applications**<br>Extractor handle, multibus type II, IEC 60297 | – | 7.44 |
|  04692008 | **For plug-in units in accordance with IEC 60297**<br>Extractor handle in key form 1 | – | 7.46 |
|  04692010 | **For plug-in units in accordance with IEC 60297**<br>Extractor handle in key form 2 | – | 7.49 |
|  04692003 | **For plug-in units in accordance with IEC 60297**<br>Static handle | 7.52 | 7.54 |
|  04692004 | **Accessories for plug-in units**<br>Mechanical protection for static trapeziform handle and fixing materials kit | 7.62 | – |

Overview .... 7.17
Plug-in units with injector and extractor handles
For CompactPCI and VME64x applications ... 7.18
For VPX, VXS, CompactPCI and VME64x applications ... 7.29
For e.g. VMEbus applications type 2 ..... 7.31
For e.g. VMEbus applications type 1 ..... 7.38
For Multibus® II applications .... 7.44
For plug-in units in accordance with IEC 60297 .. 7.46
For plug-in units in accordance with IEC 60297 .. 7.49
For plug-in units in accordance with IEC 60297 .. 7.52
Accessories for plug-in units .... 7.60
PCB cover ..... 7.62

## Kits

## Plug-in units with IEL inserter/extractor handle for CompactPCI/VME64x applications

3 U

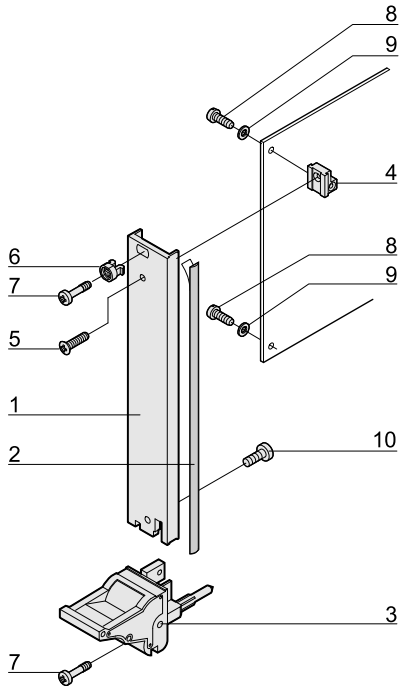


04602073

6 U

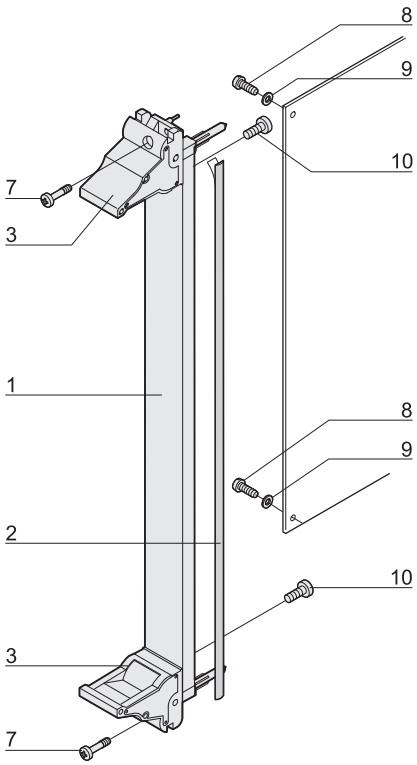


04602074

- In accordance with IEEE 1101.10 and IEC 60297-3-102
- Codable to IEC 60297-3-103/ IEEE 1101.10
- Front panel shielded
- Suitable for insertion and extraction forces up to 700 N (per pair)
- Suitable for fitting microswitches

### Delivery comprises (kit)

| Item | Qty 3 U <8HP | Qty 3 U ≥8HP | Qty 6 U <8HP | Qty 6 U ≥8HP | Description |
|---|---|---|---|---|---|
| 1 | 1 | 1 | 1 | 1 | Front panel (U profile), Al, front anodised, rear conductive |
| 2 | 1 | 1 | 1 | 1 | EMC sealing (textile), core: foam, sleeve: textile cladding, CuNi coated |
| 3 | 1 | 1 | 2 | 2 | Handle with integrated alignment pin for perforated strips and guide rails, lever: plastic, PC, black, RAL 9005 key: plastic, PC, light grey, RAL 7035 |
| 4 | 1 | 1 | - | - | Board support, die-cast zinc |
| 5 | 1 | 1 | - | - | Raised Pozidrive countersunk screw M2.5 × 8, St, nickel-plated |
| 6 | 1 | 3 | - | 2 | Sleeve, PA, grey |
| 7 | 2 | 4 | 2 | 4 | Pozidrive collar screw, M2.5 × 12.3, St, nickel-plated |
| 8 | 2 | 2 | 2 | 2 | Panhead screw with Torx/slot, M2.5 × 6, St, zinc-plated, self-locking |
| 9 | 2 | 2 | 2 | 2 | Washer A2.7, DIN 125, St, nickel-plated |
| 10 | 1 | 1 | 2 | 2 | Panhead screw with Torx, M2.5 × 7, St, nickel-plated |

### Order Information

| Width HP | Part no. Rear I/O | Part no. Front assembly |
|---|---|---|
| **3 U Height** | | |
| 4 | 20848-751 | 20848-585 |
| 6 | - | 20848-587 |
| 8 | 20848-752 | 20848-589 |
| 10 | - | 20848-590 |
| 12 | - | 20848-591 |
| **6 U Height** | | |
| 4 | - | 20848-592 |
| 6 | - | 20848-594 |
| 8 | - | 20848-596 |
| 10 | - | 20848-597 |
| 12 | - | 20848-598 |
| **Accessories** | | |
| **Microswitch for handles, CompactPCI/VME64x application** PU 10 pieces | | 20817-606 |

- Dimension drawing of front profile see page 7.25
- Description of microswitch see page 7.29



Part number in bold face type: ready for despatch within 2 working days
Part number in normal type: ready for despatch within 10 working days

## Order Information

| | | Front panel, U profile, shieldable | | | Textile EMC gasket | | Front panel, flat, unshielded, front mounting |
|---|---|---|---|---|---|---|---|
| | | Front mounting | Front mounting, PCB fixing with 0.1" offset | Rear I/O mounting | | | |
| | | 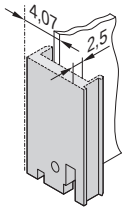 04608060 | 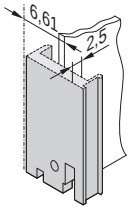 04608062 | 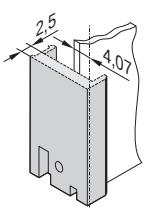 04608061 | 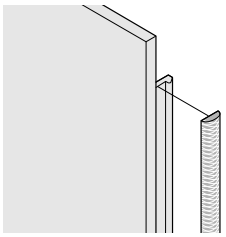 BGA45760 | | 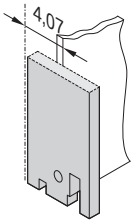 04608063 |
| | | Al extrusion, 2.5 mm, front anodised, rear conductive; alignment pin pressed-in (3 U only), stainless steel; manufacturing process causes various surface structures to appear between 4 to 12 HP and 14 to 16 HP | | | always fixed laterally on the front panel, in the groove of the profile, textile gasket, core: foam, sleeve: textile cladding with CuNi coating, UL 94 V-0, temperature range -40 ... 70 °C | | front panel, Al, 2.5 mm, front anodised, rear irisdescent green chromated |
| | Width HP | 1 piece (SPQ 5)[1] | 1 piece (SPQ 5)[1] | 1 piece (SPQ 5)[1] | PU 10 pieces | PU 100 pieces | 1 piece (SPQ 5)[1] |
| | | **3 U Height** | | | | | |
| 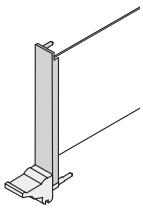 04608067 | 4 | 30848-312 | 30848-426 | 30848-867 | 21101-853 | 21101-854 | 30848-327 |
| | 5 | 30848-300 | 30848-427 | – | | | 30848-328 |
| | 6 | 30848-313 | 30848-428 | – | | | 30848-329 |
| | 7 | 30848-301 | 30848-429 | – | | | 30848-330 |
| | 8 | 30848-314 | 30848-430 | 30848-869 | | | 30848-331 |
| | 9 | 20848-227 | – | – | | | – |
| | 10 | 30848-315 | 30848-431 | – | | | 30848-333 |
| | 11 | 20848-228 | – | – | | | – |
| | 12 | 30848-316 | 30848-432 | 30848-985 | | | 30848-335 |
| | 14 | 20848-230 | – | – | | | – |
| | 16 | 20848-232 | – | – | | | – |
| | | **6 U Height** | | | | | |
| 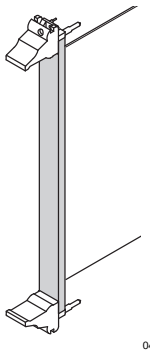 04608066 | 4 | 30848-317 | 30848-317 | 30848-317 | 21101-855 | 21101-856 | 30848-336 |
| | 5 | 30848-304 | 30848-304 | 30848-304 | | | 30848-337 |
| | 6 | 30848-318 | 30848-318 | 30848-318 | | | 30848-338 |
| | 7 | 30848-305 | 30848-305 | 30848-305 | | | 30848-339 |
| | 8 | 30848-319 | 30848-319 | 30848-319 | | | 30848-340 |
| | 9 | 20848-243 | 20848-243 | 20848-243 | | | – |
| | 10 | 30848-320 | 30848-320 | 30848-320 | | | 30848-342 |
| | 11 | 20848-244 | 20848-244 | 20848-244 | | | – |
| | 12 | 30848-321 | 30848-321 | 30848-321 | | | 30848-344 |
| | 14 | 20848-246 | 20848-246 | 20848-246 | | | – |
| | 16 | 20848-248 | 20848-248 | 20848-248 | | | – |
| Fixing material see page | | 7.22 | 7.22 | 7.22 | | | 7.22 |
| Dimensions see page | | 7.25 | 7.25 | 7.24 | | | 7.26 |

1) SPQ (standard pack quantity): Part number includes 1 piece, but delivery is exclusively made in standard pack quantity (SPQ); please order at least the SPQ quantity or a multiple

Part no. includes one packing unit (PU); delivery is exclusively made in PU

## Individual components — Inserter/extractor handle, type IEL

### Order Information

| | Inserter/extractor handle, type IEL, board fixing without offset | | | | Inserter/extractor handle, type IEL, board fixing with 0.1" offset | | | |
|---|---|---|---|---|---|---|---|---|
| | lever: light grey, RAL 7035<br>key: black, RAL 9005 | | lever: black, RAL 9005<br>key: light grey, RAL 7035 | | lever: light grey, RAL 7035<br>key: black, RAL 9005 | | lever: black, RAL 9005<br>key: light grey, RAL 7035 | |
| | 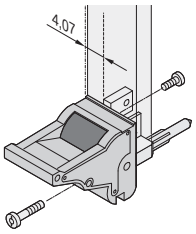<br>04608050 | | 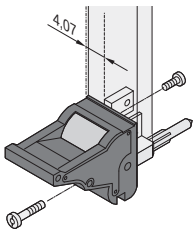<br>04608052 | | 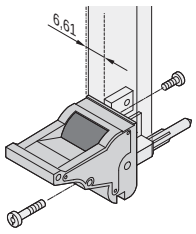<br>04608051 | | 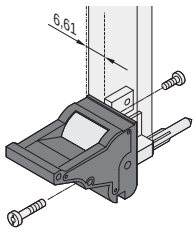<br>04808074 | |
| | in accordance with IEEE 1101.10 and IEC 60297-3-102,<br>with locking,<br>suitable for insertion and extraction forces up to 700 N (per pair),<br>suitable for fitting of microswitches;<br>block die-cast zinc, nickel-plated,<br>with integrated alignment pin for perforated strip,<br>codable to IEEE 1101.10 and IEC 60297-3-103,<br>lever/key UL 94 V-0,<br>slotted Pozidrive collar screw, M2.5 x 12.3, St, nickel-plated,<br>panhead screw with Torx, M2.5 x 7, St, nickel-plated | | | | in accordance with IEEE 1101.10 and IEC 60297-3-102,<br>with locking,<br>suitable for insertion and extraction forces up to 700 N (per pair),<br>suitable for fitting of microswitches;<br>0.1" offset is used for PSUs with SMD Plus,<br>block die-cast zinc, nickel plated;<br>with integrated alignment pin for perforated strip,<br>codable to IEEE 1101.10 and IEC 60297-3-103,<br>lever/key UL 94 V-0,<br>slotted Pozidrive collar screw, M2.5 x 12.3, St, nickel-plated,<br>panhead screw with Torx, M2.5 x 7, St, nickel-plated | | | |
| **Assembly** | **PU 10 pieces** | **PU 100 pieces** | **PU 10 pieces** | **PU 100 pieces** | **PU 10 pieces** | **PU 100 pieces** | **PU 10 pieces** | **PU 100 pieces** |
| 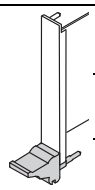<br>04608071 | **3 U Height**<br>bottom | | | | | | | |
| **Front side** | 20817-620 | 20817-621 | 20817-612 | 20817-613 | 20817-690 | 20817-691 | 20817-682 | 20817-683 |
| **Rear I/O** | 20817-622 | 20817-623 | 20817-614 | 20817-615 | – | – | – | – |
| 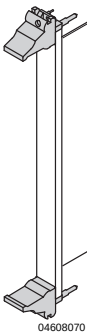<br>04608070 | **6 U Height**<br>top | | | | | | | |
| **Front side** | 20817-622 | 20817-623 | 20817-614 | 20817-615 | 20817-692 | 20817-693 | 20817-684 | 20817-685 |
| **Rear I/O** | 20817-620 | 20817-621 | 20817-612 | 20817-613 | – | – | – | – |
| | bottom | | | | | | | |
| **Front side** | 20817-620 | 20817-621 | 20817-612 | 20817-613 | 20817-690 | 20817-691 | 20817-682 | 20817-683 |
| **Rear I/O** | 20817-622 | 20817-623 | 20817-614 | 20817-615 | – | – | – | – |
| Dimensions see page | 7.27 | | | | 7.27 | | | |



Part number in bold face type: ready for despatch within 2 working days
Part number in normal type: ready for despatch within 10 working days

## Order Information

| | Inserter/extractor handle, type IET, board fixing without offset | | | | Inserter/extractor handle, type IET, board fixing with 0.1" offset | | | |
|---|---|---|---|---|---|---|---|---|
| | lever: light grey, RAL 7035<br>key: black, RAL 9005 | | lever: black, RAL 9005<br>key: light grey, RAL 7035 | | lever: light grey, RAL 7035<br>key: black, RAL 9005 | | lever: black, RAL 9005<br>key: light grey, RAL 7035 | |
| | 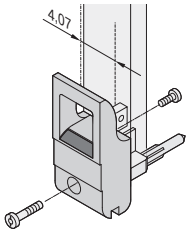 04608054 | | 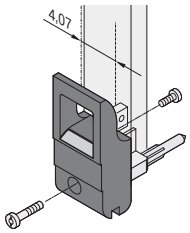 04608056 | | 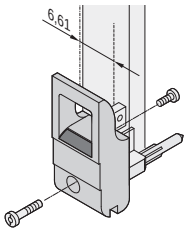 04608055 | | 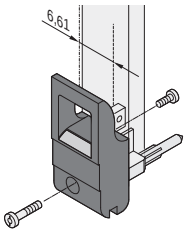 04808074 | |
| | in accordance with IEEE 1101.10 and IEC 60297-3-102,<br>with locking,<br>suitable for insertion and extraction forces up to 700 N (per pair),<br>suitable for fitting of microswitches;<br>block die-cast zinc, nickel-plated,<br>with integrated alignment pin for perforated strip,<br>codable to IEEE 1101.10 and IEC 60297-3-103,<br>lever/key UL 94 V-0,<br>Slotted Pozidrive collar screw, M2.5 x 12.3, St, nickel-plated,<br>panhead screw with Torx, M2.5 x 7, St, nickel-plated | | | | in accordance with IEEE 1101.10 and IEC 60297-3-102,<br>with locking,<br>suitable for insertion and extraction forces up to 700 N (per pair),<br>suitable for fitting of microswitches;<br>0.1" offset is used for PSUs with SMD Plus:<br>block die-cast zinc, nickel plated;<br>with integrated alignment pin for perforated strip,<br>codable to IEEE 1101.10 and IEC 60297-3-103,<br>lever/key UL 94 V-0,<br>slotted Pozidrive collar screw, M2.5 x 12.3, St, nickel-plated,<br>panhead screw with Torx, M2.5 x 7, St, nickel-plated | | | |
| **Assembly** | **PU 10 pieces** | **PU 100 pieces** | **PU 10 pieces** | **PU 100 pieces** | **PU 10 pieces** | **PU 100 pieces** | **PU 10 pieces** | **PU 100 pieces** |
| 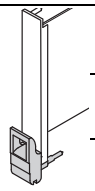 04608073 | **3 U Height**<br>bottom | | | | | | | |
| **Front side** | 20817-660 | 20817-661 | 20817-652 | 20817-653 | 20817-714 | 20817-715 | 20817-706 | 20817-707 |
| **Rear I/O** | 20817-662 | 20817-663 | 20817-654 | 20817-655 | – | – | – | – |
| 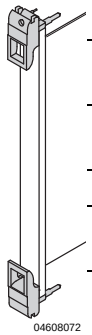 04608072 | **6 U Height**<br>top | | | | | | | |
| **Front side** | 20817-662 | 20817-663 | 20817-654 | 20817-655 | 20817-716 | 20817-717 | 20817-708 | 20817-709 |
| **Rear I/O** | 20817-660 | 20817-661 | 20817-652 | 20817-653 | – | – | – | – |
| | bottom | | | | | | | |
| **Front side** | 20817-660 | 20817-661 | 20817-652 | 20817-653 | 20817-714 | 20817-715 | 20817-706 | 20817-707 |
| **Rear I/O** | 20817-662 | 20817-663 | 20817-654 | 20817-655 | – | – | – | – |
| Fixing material<br>see page | 7.22 | | | | 7.22 | | | |
| Dimensions<br>see page | 7.28 | | | | 7.28 | | | |

## Individual components — inserter/extractor handles, type IEL/IET, fixing material

### Order Information

**3 U**

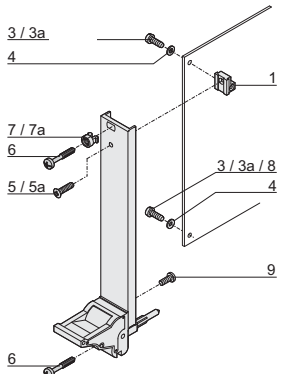

04609050

**6 U**

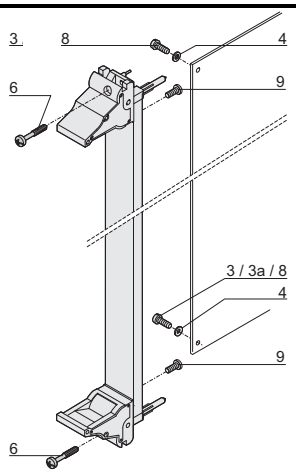

04609051

| Fixing material | Item | 3 U | Required quantity 3 U < 8 HP | 3 U ≥ 8 HP | 6 U < 8 HP | 6 U ≥ 8 HP | Qty/PU | Part no. |
|---|---|---|---|---|---|---|---|---|
| Printed board bracket<br>Zn die-cast | 1 | 06707050 | 1 | 1 | – | – | 1 piece<br>(SPG 10)[1)] | 60807-181 |
| Pozidrive panhead screw<br>M2.5 × 6, St, nickel-plated , not for 0.1" offset | 3 | AZA45177 | 2 | 2 | 2 | 2 | 100 | 21101-219 |
| Slotted panhead screw with Torx 8<br>M2.5 × 6, St, zinc-plated, self-securing thread<br>not for 0.1" offset | 3a | aza45940 | 2 | 2 | 2 | 2 | 100 | 24560-159 |
| Washer<br>2.7, DIN 125, St, nickel-plated | 4 | AZA46586 | 2 | 2 | 2 | 2 | 100 | 21100-721 |
| Raised Pozidrive countersunk panhead screw<br>M2.5 × 8, St, nickel-plated | 5 | 06702056 | 1 | 1 | – | – | 100 | 21100-429 |
| Raised countersunk panhead screw with Torx 8<br>M2.5 × 8, St, nickel-plated | 5a | 06708050 | 1 | 1 | – | – | 100 | 24560-164 |
| Pozidrive/slotted collar screw<br>M2.5 × 12.3, St, nickel-plated<br>AZA46586 | 6 | AZA46586 | 1 | 3 | – | 2 | 100 | 21101-101 |
| Plastic sleeve, for form hole 5.9 x 3.3<br>PA, UL 90 V-2, grey | 7 | aza45933 | 1 | 3 | – | 2 | 100 | 21100-464 |
| Metal sleeve, for form hole 5.9 x 3.3, press-in<br>Stainless steal | 7a | aza45934 | 1 | 3 | – | 2 | 100 | 21100-662 |
| Pozidrive panhead screw<br>for IEL/IET handle with 0.1" offset<br>M2.5 × 10, nickel-plated steel | 8 | AZA45177 | 2 | 2 | 2 | 2 | 100 | 21101-220 |
| Torx panhead screw<br>M2.5 × 7, St, nickel-plated, Torx 8, | 9 | aza45940 | 1 | 1 | 2 | 2 | 100 | 24560-147 |

1) SPQ (standard pack quantity): Part number includes 1 piece, but delivery is exclusively made in standard pack quantity (SPQ); please order at least the SPQ quantity or a multiple

## Order Information

| Microswitch | Keying/coding | Label strips | Label strips | |
|---|---|---|---|---|
| with cable and plug | in accordance with IEC 60297-3-103 | 19 x 9.5 mm | 19 x 9.5 mm | 19 x 4.8 mm |
| 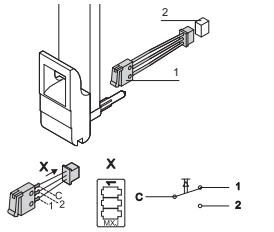 bga46314 bga46315 | 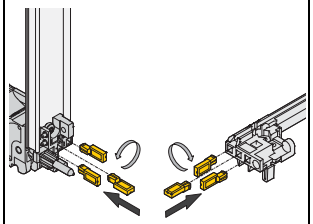 04612052 | 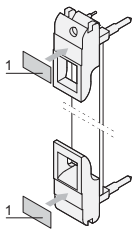 04808074 | 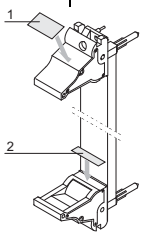 04808074 | |
| Molex connector housing 51021-0300, Molex crimp contact 50058-8000 and fixing clip (item 3), plastic, PC, UL 94 V-0, max. switched current 50 mA, operating range -25 °C to +70 °C, mech. life ≥ 20,000 switching cycles, electr. life ≥ 20,000 switching cycles; suitable mating connectors (item 2) e.g. Molex 53261-0319, 53048-0310, 53047-0310, 53398-0319, 51047-0300 not included in scope of delivery | The keying/coding pegs prevent plug-in units to be mounted in wrong slots. They are inserted in the chambers of the codable card guides as well as in the insertion/ extraction handles IEL or IET (4 possible positions), resulting in 64 codings per card guide; when coding the upper and lower card guide, 4096 codings will result; guide rails for coding see page 6.38 | Polyester, self-adhesive,white, 1 sheet 210 pieces (Item 1) | Polyester, self-adhesive, white, 1 sheet 210 pieces (item 1) | Polyester, self-adhesive, white, 1 sheet 320 pieces (item 2) |
| **PU 10 pieces** | **PU 100 pieces** | **PU 210 pieces** | **PU 210 pieces** | **PU 320 pieces** |
| **3 U Height** bottom | | | | |
| 20817-606 | 20817-501 | 60817-340 | 60817-340 | 60817-341 |
| **6 U Height** top | | | | |
| 20817-606 | 20817-501 | 60817-340 | 60817-340 | 60817-341 |
| bottom | | | | |
| 20817-606 | 20817-501 | 60817-340 | 60817-340 | 60817-341 |

## Dimensions — Front panels, U-profiles, inserter/extractor handles, type IEL/IET, rear I/O, shieldable

PCB fixing without offset

**3 U**

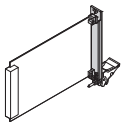

04608068

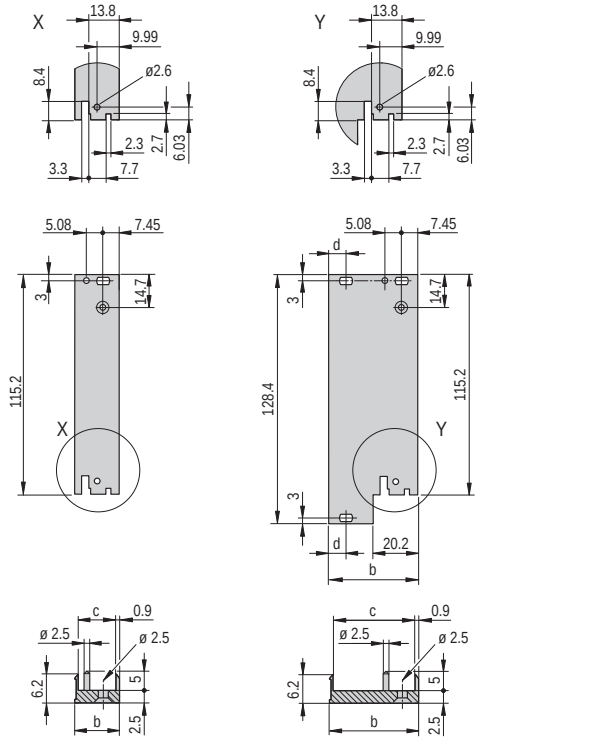


04608069

4 HP ≥5 HP

**6 U**

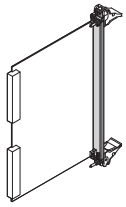

04608076

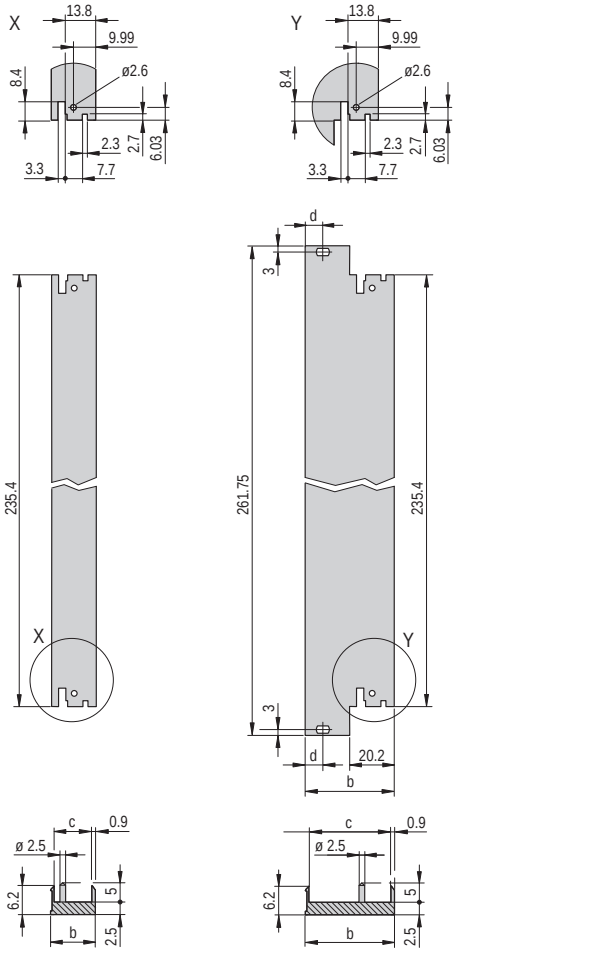


04608075

4 HP ≥5 HP

### Dimensions table

| Width | b | c | d |
|---|---|---|---|
| HP | mm | mm | mm |
| 4 | 19.98 | 17.45 | – |
| 5 | 25.06 | 22.53 | – |
| 6 | 30.14 | 27.61 | – |
| 7 | 35.22 | 32.69 | – |
| 8 | 40.30 | 37.77 | 7.45 |
| 9 | 45.38 | 42.85 | 7.45 |
| 10 | 50.46 | 47.93 | 7.45 |
| 11 | 55.54 | 53.01 | 7.45 |
| 12 | 60.62 | 58.09 | 7.45 |
| 14 | 70.78 | 68.25 | 7.45 |
| 16 | 80.94 | 78.41 | 7.45 |



Part number in bold face type: ready for despatch within 2 working days
Part number in normal type: ready for despatch within 10 working days

## Dimensions — Front panels, U-profiles, inserter/extractor handles, type IEL, IET, shieldable

PCB fixing without offset / with 0.1" offset

**3 U**

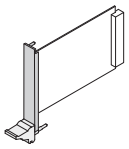

04608067

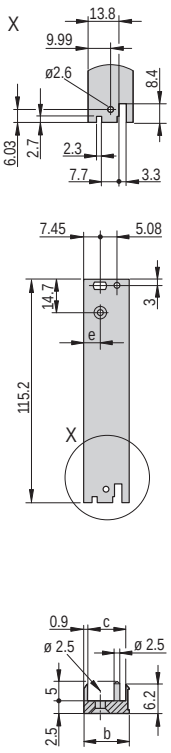


4 HP ≥5 HP

04608064

**6 U**

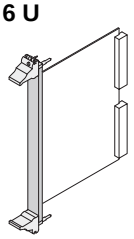

04608066

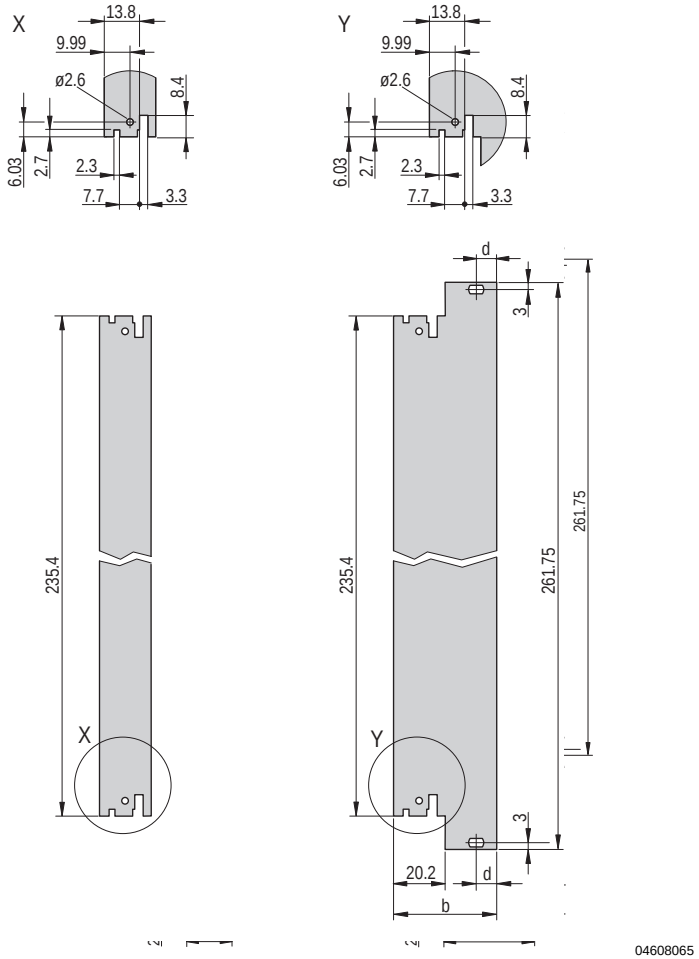


4 HP ≥5 HP

04608065

### Dimensions table

| Width HP | b mm | c mm | d mm | without offset e mm | with 0.1" offset e mm |
|---|---|---|---|---|---|
| 4 | 19.98 | 17.45 | – | 7.45 | 9.99 |
| 5 | 25.06 | 22.53 | – | 7.45 | 9.99 |
| 6 | 30.14 | 27.61 | – | 7.45 | 9.99 |
| 7 | 35.22 | 32.69 | – | 7.45 | 9.99 |
| 8 | 40.30 | 37.77 | 7.45 | 7.45 | 9.99 |
| 9 | 45.38 | 42.85 | 7.45 | 7.45 | 9.99 |
| 10 | 50.46 | 47.93 | 7.45 | 7.45 | 9.99 |
| 11 | 55.54 | 53.01 | 7.45 | 7.45 | 9.99 |
| 12 | 60.62 | 58.09 | 7.45 | 7.45 | 9.99 |
| 14 | 70.78 | 68.25 | 7.45 | 7.45 | 9.99 |
| 16 | 80.94 | 78.41 | 7.45 | 7.45 | 9.99 |

## Dimensions Front panels, inserter/extractor handles, type IEL/IET, unshielded

PCB fixing without offset

**3 U**

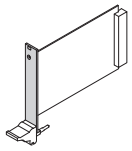

04608080

**6 U**

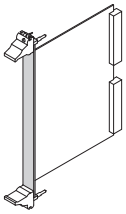

04608079

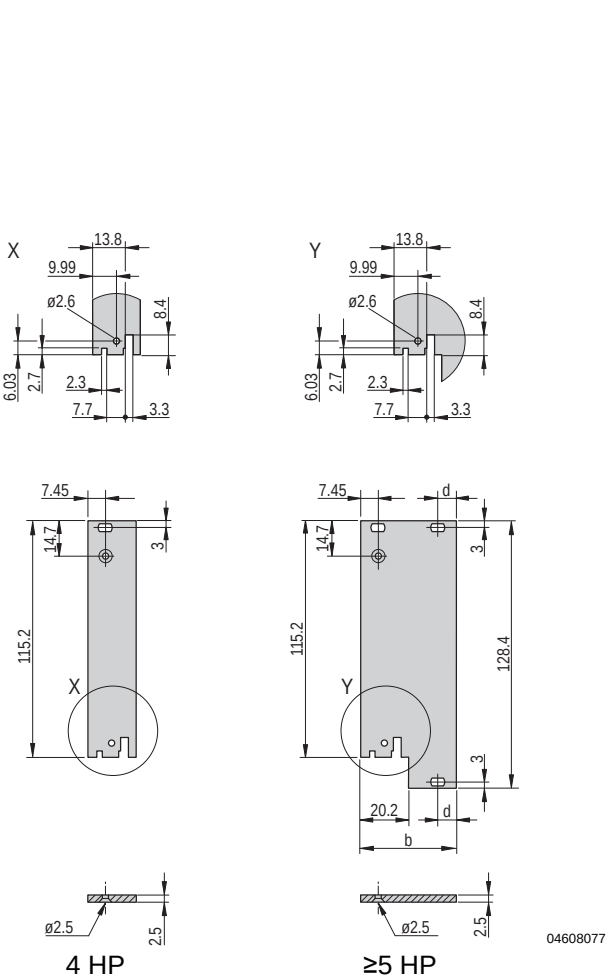


04608077

4 HP

≥5 HP

04608078

4 HP

≥5 HP

### Dimensions table

| Width HP | b mm | d mm |
|---|---|---|
| 4 | 19.98 | – |
| 5 | 25.06 | – |
| 6 | 30.14 | – |
| 7 | 35.22 | – |
| 8 | 40.30 | 7.45 |
| 9 | 45.38 | 7.45 |
| 10 | 50.46 | 7.45 |
| 11 | 55.54 | 7.45 |
| 12 | 60.62 | 7.45 |
| 14 | 70.78 | 7.45 |
| 16 | 80.94 | 7.45 |



Part number in bold face type: ready for despatch within 2 working days
Part number in normal type: ready for despatch within 10 working days

## Dimensions Inserter/extractor handle, type IEL

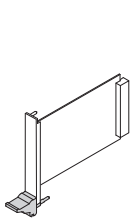

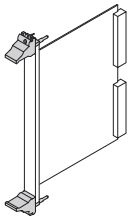

04608071 04608070

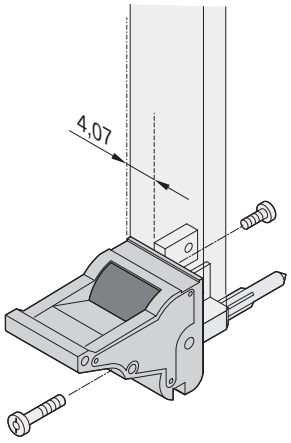


04608050

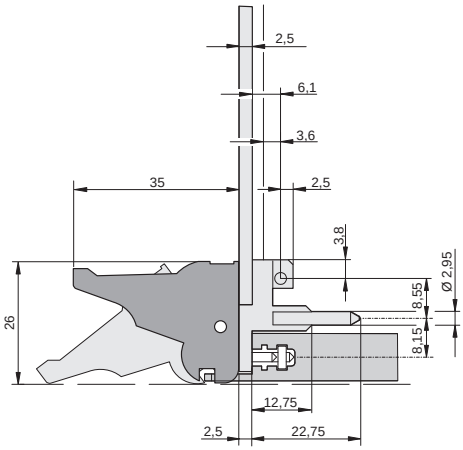


04603059

bottom

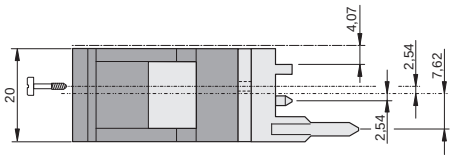


04607053

top

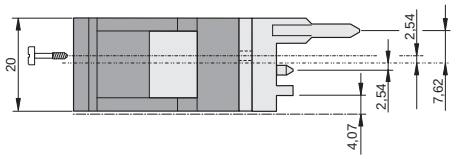


04607054

## Dimensions Inserter/extractor handle, type IEL, 0.1" offset

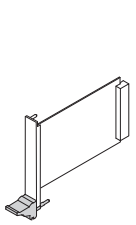

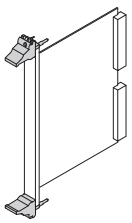

04608071 04608070

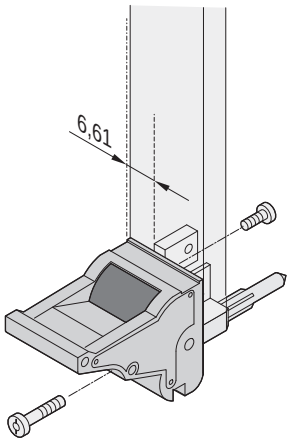


04608051

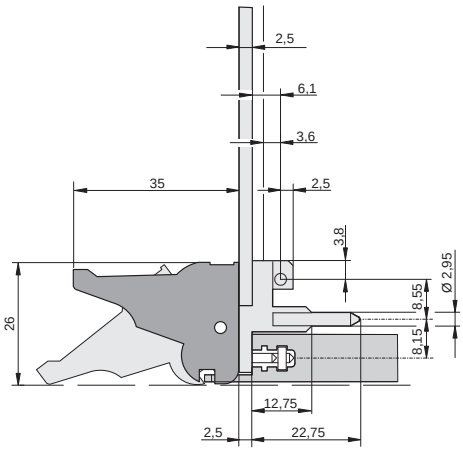


04603059

bottom

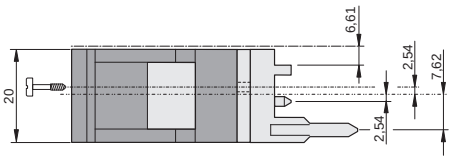


04603061

top

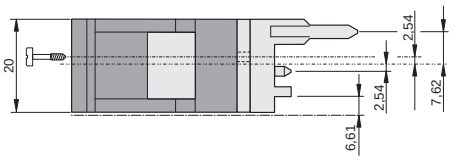


04607055

## Dimensions Inserter/extractor handle, type IET

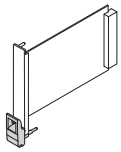

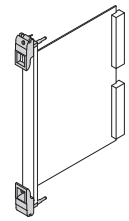

04608073 04608072

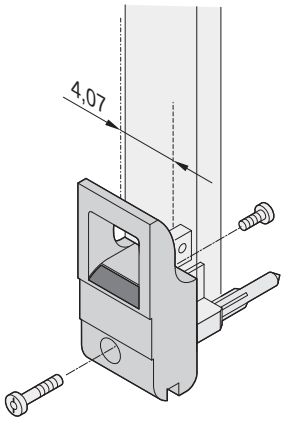


04608054

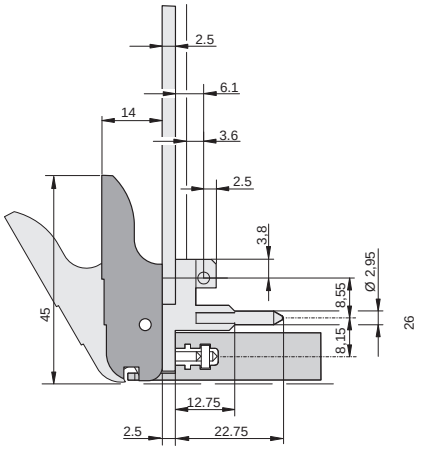


04603060

bottom

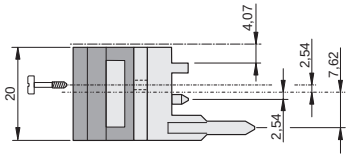


04607056

top

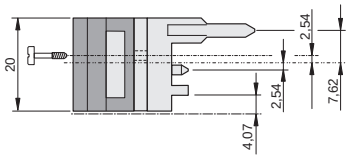


04607057

## Dimensions Inserter/extractor handle, type IET, 0.1" offset

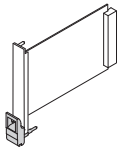

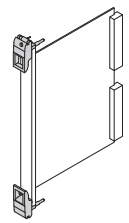

04608073 04608072

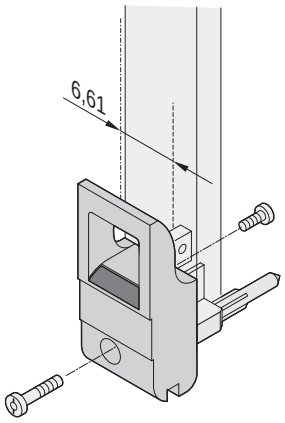


04608055

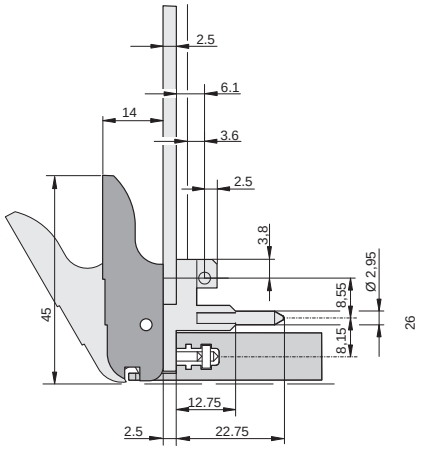


04603060

bottom

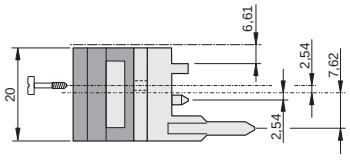


04603062

top

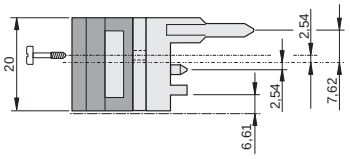


04607058



Part number in bold face type: ready for despatch within 2 working days
Part number in normal type: ready for despatch within 10 working days

## Individual components — Inserter/extractor handle, type XL, front panels, microswitch

| | Inserter/extractor handle, type XL | U front profile, shieldable, for inserter/extractor handle, type XL | | EMC gasket (textile) | | Microswitch item 1 |
|---|---|---|---|---|---|---|
| | | without cut-out for microswitch | with cut-out for microswitch | | | with cable and plug |
| | 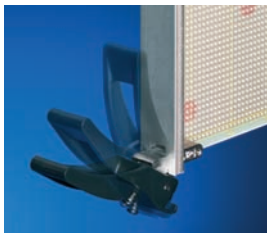 04805008 | 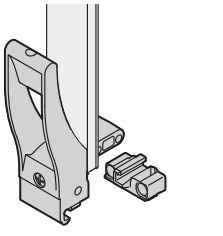 04608081 | 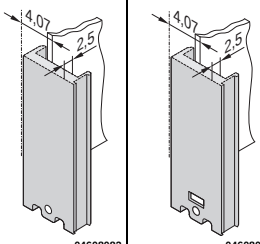 04608082 | 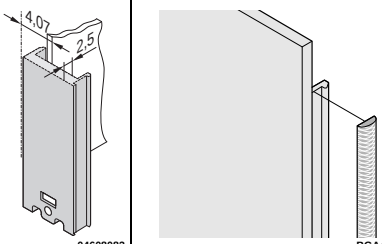 04608083 |  BGA45760 | 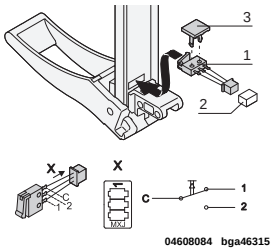 04608084 bga46315 |
| | kit, incl. die-cast bearing and assembly kit; insertion and extraction force up to 1500 Nm per pair; handle in PA, fibreglass reinforced, UL 94V 0; robust board fixing with double bolt fixing, microswitches can be fitted | Al, front anodised, sides and rear conductive, for sleeve and collar screw see page 7.35 | Al, front anodised, sides and rear conductive for sleeve and collar screw see page 7.35 | always fixed laterally on the front panel, in the groove of the profile, textile gasket, core: foam, sleeve: textile cladding with CuNi coating, UL 94 V-0 | | Molex connector housing 51021-0300, Molex crimp contact 50058-8000 and fixing clip (item 3), plastic, PC, UL 94 V-0, max. switched current 50 mA, operating range -25 °C to +70 °C, mech. life ≥ 20,000 switching cycles, electr. life ≥ 20,000 switching cycles; suitable mating connector (item 2) e.g. Molex 53261-0319, 53048-0310, 53047-0310, 53398-0319, 51047-0300, not included in scope of delivery |
| Width HP | PU 10 pieces | 1 piece (SPQ 5)[1] | 1 piece (SPQ 5)[1] | PU 10 pieces | PU 100 pieces | PU 10 pieces |
| | **6 U Height** | | | | | |
| 4 | 20817-874 | 30849-153 | 30849-154 | 21101-855 | 21101-856 | 20817-877 |
| 8 | | 30849-155 | 30849-156 | | | |
| 12 | | 30849-157 | 30849-158 | | | |
| Dimensions see page | 7.30 | 7.30 | 7.30 | | | |

1) SPQ (standard pack quantity): Part number includes 1 piece, but delivery is exclusively made in standard pack quantity (SPQ); please order at least the SPQ quantity or a multiple

Part no. includes one packing unit (PU); delivery is exclusively made in PU

### Note

- Please order front panels separately

## Dimensions U front profile for extractor handle type XL, shieldable

6 U/4 HP

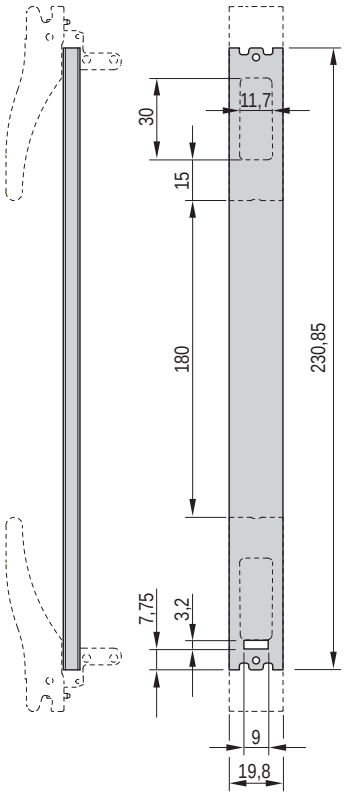


04605053

6 U/8 HP

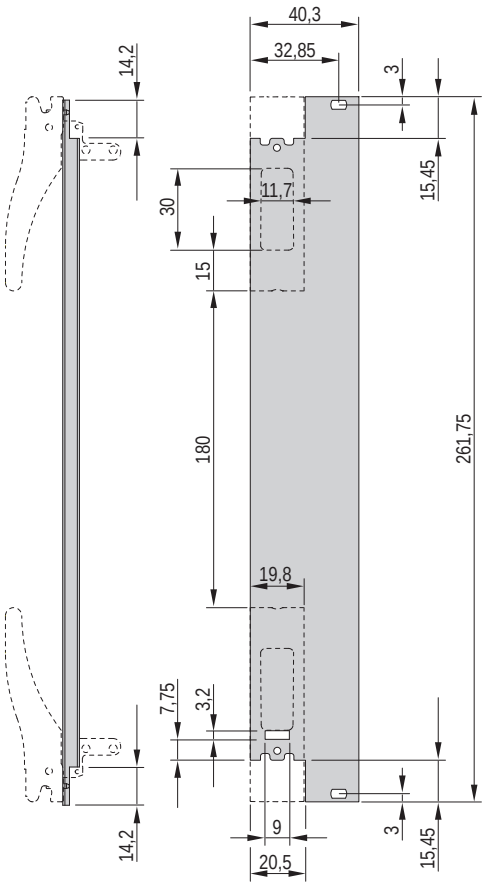


04605054

6 U/12 HP

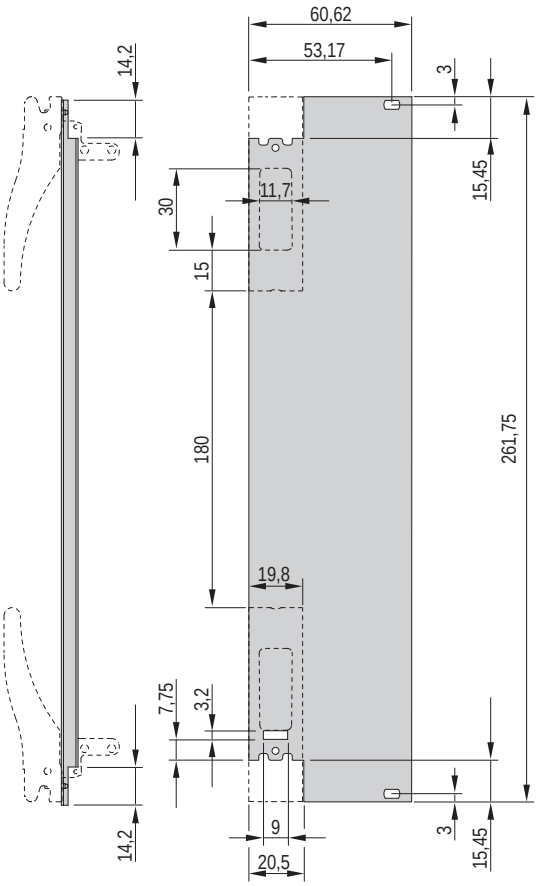


04605055

## Dimensions Inserter/extractor handle, type XL

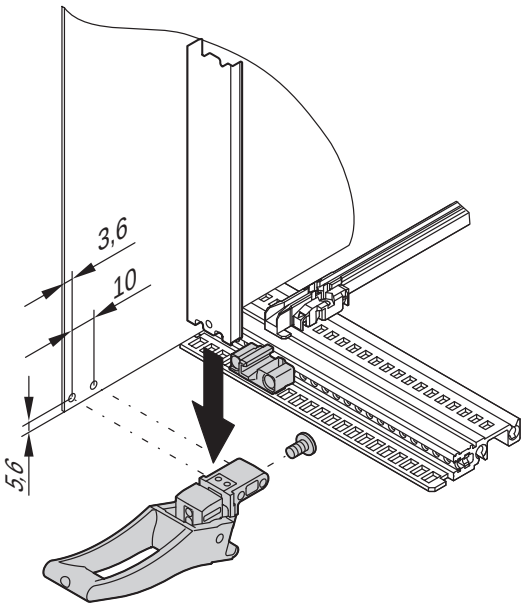


04608113



Part number in bold face type: ready for despatch within 2 working days
Part number in normal type: ready for despatch within 10 working days

## Kits

## Plug-in units with trapeziform extractor handle, type 2

3 U

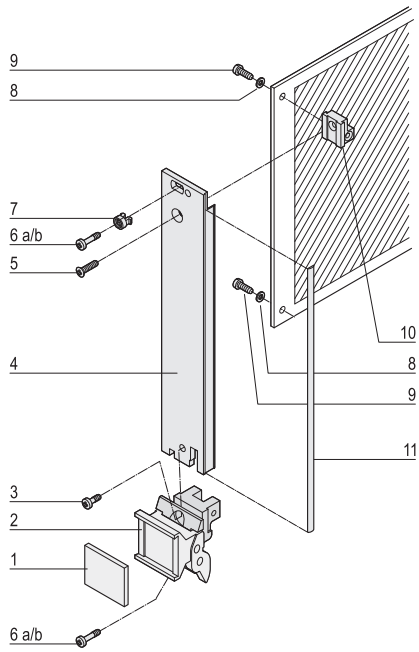


04604050

6 U

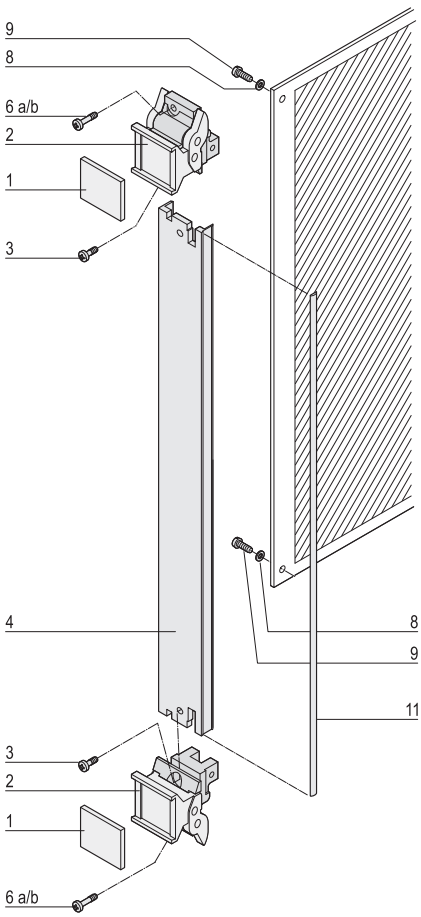


04604051

■ Shielded

**Delivery comprises** (kit)

| Item | Qty 3 U <8HP | Qty 3 U ≥8HP | Qty 6 U <8HP | Qty 6 U ≥8HP | Description |
|---|---|---|---|---|---|
| 1 | 1 | 1 | 2 | 2 | Identification plate, Al, 1.5 mm, anodised, cut edges untreated |
| 2 | 1 | 1 | 2 | 2 | Extractor handle, trapeziform, type 2, lever: PPE, light grey, RAL 7035, block die-cast zinc, nickel-plated, with integrated alignment pin for perforated strip |
| 3 | 1 | 1 | 2 | 2 | Pozidrive flathead screw, St, M2.5 x 6, nickel-plated |
| 4 | 1 | 1 | 1 | 1 | Front panel, U profile, Al, front anodised, rear conductive |
| 5 | 1 | 1 | – | – | Raised Pozidrive countersunk screw M2.5 × 8, St, nickel-plated |
| 6a | 2 | 4 | 2 | 4 | Pozidrive collar screw, M2.5 × 12.3, St, nickel-plated, |
| 6b | 2 | 4 | 2 | 4 | collar screw, Pozidrive/slot, M2.5 × 11, St, nickel-plated, |
| 7 | 1 | 3 | – | 2 | Sleeve, PA, grey |
| 8 | 2 | 2 | 2 | 2 | Washer A 2.7, DIN 125 |
| 9 | 2 | 2 | 2 | 2 | Panhead screw with Torx/slot, M2.5 x 6, St, zinc-plated, self-locking |
| 10 | 1 | 1 | – | – | Board support, die-cast zinc |
| 11 | 1 | 1 | 1 | 1 | EMC sealing (textile), core: foam, sleeve: textile cladding, Cu-Ni coated |

**Order Information**

| Height U | Width HP | Part no. |
|---|---|---|
| 3 | 4 | 20848-686 |
| 3 | 6 | 20848-687 |
| 3 | 8 | 20848-688 |
| 3 | 10 | 20848-689 |
| 3 | 12 | 20848-690 |
| 6 | 4 | 20848-691 |
| 6 | 6 | 20848-692 |
| 6 | 8 | 20848-693 |
| 6 | 10 | 20848-694 |
| 6 | 12 | 20848-695 |

■ Dimension drawings of front profile see page 7.36
■ Description of microswitch see page 7.29

**For further information www.schroff.biz/oneclick**
oneClick search code = Part no.

## Kits

## Plug-in units with trapeziform extractor handle, type 2

3 U

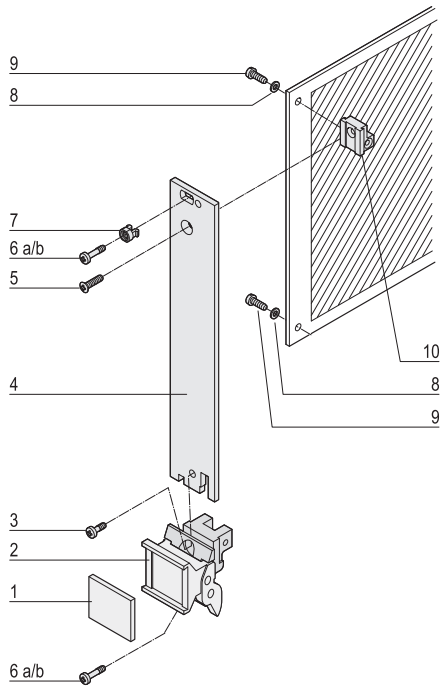


04604052

6 U

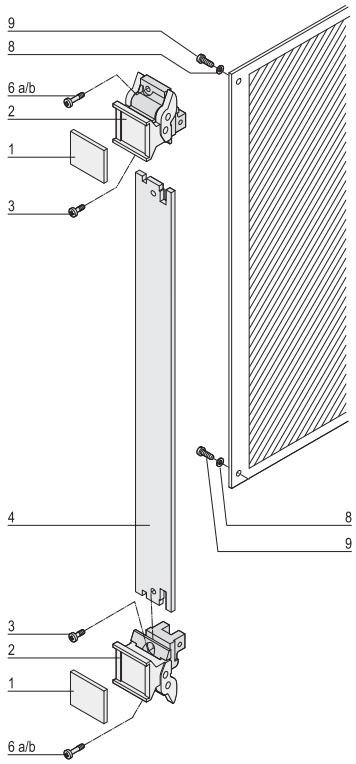


04604053

■ Unshielded

**Delivery comprises** (kit)

| Item | Qty 3 U <8HP | Qty 3 U ≥8HP | Qty 6 U <8HP | Qty 6 U 8 HP | Description |
|---|---|---|---|---|---|
| 1 | 1 | 1 | 2 | 2 | Identification plate, Al, 1.5 mm, anodised, cut edges plain |
| 2 | 1 | 1 | 2 | 2 | Extractor handle, trapeziform, type 2, lever: PPE, light grey, RAL 7035, block: die-cast zinc, nickel-plated |
| 3 | 1 | 1 | 2 | 2 | Flathead screw M2.5 x 6, nickel-plated |
| 4 | 1 | 1 | 1 | 1 | Front panel, Al, 2.5 mm, front: anodised, rear: irisdescent green chromated |
| 5 | 1 | 1 | – | – | Raised Pozidrive countersunk screw, M2.5 × 8, St, nickel-plated |
| 6a | 2 | 4 | 2 | 4 | Slotted Pozidrive collar screw, M2.5 x 12.3, St, nickel-plated, |
| 6b | 2 | 4 | 2 | 4 | slotted Pozidrive collar screw, M2.5 x 11, St, nickel-plated |
| 7 | 1 | 3 | – | 2 | Sleeve, PA, grey |
| 8 | 2 | 2 | 2 | 2 | Washer A 2.7, DIN 125 |
| 9 | 2 | 2 | 2 | 2 | Slotted Torx panhead screw, M2.5 x 6, St, zinc-plated, self-locking |
| 10 | 1 | 1 | – | – | Board support, die-cast zinc |

**Order Information**

| Height U | Width HP | Part no. |
|---|---|---|
| 3 | 4 | 20817-860 |
| 3 | 5 | 20817-861 |
| 3 | 6 | 20817-862 |
| 3 | 7 | 20817-863 |
| 3 | 8 | 20817-864 |
| 3 | 10 | 20817-865 |
| 3 | 12 | 20817-866 |
| 6 | 4 | 20817-867 |
| 6 | 5 | 20817-868 |
| 6 | 6 | 20817-869 |
| 6 | 7 | 20817-870 |
| 6 | 8 | 20817-871 |
| 6 | 10 | 20817-872 |
| 6 | 12 | 20817-873 |

■ Dimension drawing of front profile see page 7.36
■ Description of microswitch see page 7.29

**For further information www.schroff.biz/oneclick**
oneClick search code = Part no.



Part number in bold face type: ready for despatch within 2 working days
Part number in normal type: ready for despatch within 10 working days

## Individual components — U front profiles/front panels for trapeziform extractor handle, type 2

### Order Information

| | | Front panel, U profile, shieldable | Textile EMC gasket | | Front panel, flat, unshielded |
|---|---|---|---|---|---|
| | | 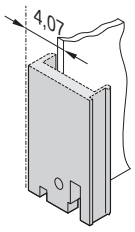 04608060 | 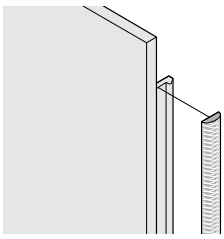 BGA45760 | | 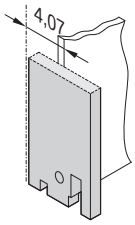 04608063 |
| | | Al extrusion, 2.5 mm, front anodised, rear conductive; alignment pin pressed-in (3 U only), stainless steel; manufacturing process causes various surface structures to appear between 4 to 12 HP and 14 to 16 HP | always fixed laterally on the front panel, in the groove of the profile, textile gasket, core: foam, sleeve: textile cladding with CuNi coating, UL 94 V-0, temperature range -40 ... 70 °C | | Front panel, Al, 2.5 mm, front anodised, rear irisdescent green chromated |
| | **Width HP** | **1 piece (SPQ 5)[1)]** | **PU 10 pieces** | **PU 100 pieces** | **1 piece (SPQ 5)[1)]** |
| 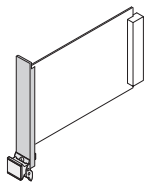 04608109 | | **3 U Height** | | | |
| | 4 | 30848-312 | 21101-853 | 21101-854 | 30848-327 |
| | 5 | 30848-300 | | | 30848-328 |
| | 6 | 30848-313 | | | 30848-329 |
| | 7 | 30848-301 | | | 30848-330 |
| | 8 | 30848-314 | | | 30848-331 |
| | 10 | 30848-315 | | | 30848-333 |
| | 12 | 30848-316 | | | 30848-335 |
| 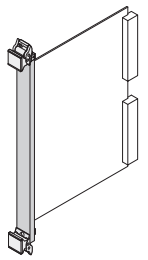 04608107 | | **6 U Height** | | | |
| | 4 | 30848-317 | 21101-855 | 21101-856 | 30848-336 |
| | 5 | 30848-304 | | | 30848-337 |
| | 6 | 30848-318 | | | 30848-338 |
| | 7 | 30848-305 | | | 30848-339 |
| | 8 | 30848-319 | | | 30848-340 |
| | 10 | 30848-320 | | | 30848-342 |
| | 12 | 30848-321 | | | 30848-344 |
| Dimensions see page | | 7.36 | | | 7.36 |

1) SPQ (standard pack quantity): Part number includes 1 piece, but delivery is exclusively made in standard pack quantity (SPQ); please order at least the SPQ quantity or a multiple

Part no. includes one packing unit (PU); delivery is exclusively made in PU

## Individual components — Extractor handle, trapeziform, type 2

### Order Information

| | Trapeziform extractor handle, type 2 without alignment pin | | | Trapeziform extractor handle, type 2 with alignment pin | | |
|---|---|---|---|---|---|---|
| | **lever, light grey, RAL 7035** | **lever, dark grey, RAL 7032** | **lever, black, RAL 9005** | **lever, light grey, RAL 7035** | **lever, dark grey, RAL 7032** | **lever, black, RAL 9005** |
| | 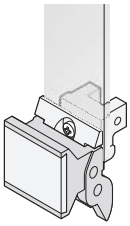 04608085 | 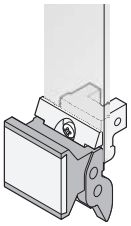 BGA45760 | 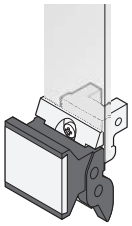 04608087 | 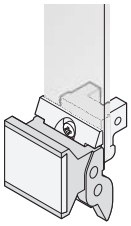 BGA45760 | 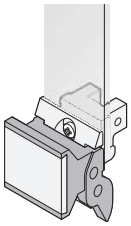 04608086 | 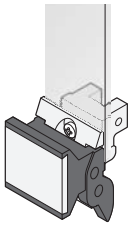 04608087 |
| | Extractor handle, PPE; block, die-cast zinc, zinc-plated; identification plate, Al, 1.5 mm, anodised, cut edges plain; Pozidrive flat-head screw, M2.5 x 6, nickel-plated; slotted Pozidrive collar screw, M2.5 x 12.3, St, nickel-plated; slotted Pozidrive collar screw, M2.5 × 11, St, nickel-plated, | | | Extractor handle, PPE; block, die-cast zinc, zinc-plated; Identification plate, Al, 1.5 mm, anodised, cut edges plain; Pozidrive flat-head screw, M2.5 x 6, nickel-plated; slotted Pozidrive collar screw, M2.5 x 12.3, St, nickel-plated; slotted Pozidrive collar screw, M2.5 × 11, St, nickel-plated, | | |
| **Width HP** | **1 piece (SPQ 10)[1)]** | **1 piece (SPQ 10)[1)]** | **1 piece (SPQ 10)[1)]** | **1 piece (SPQ 10)[1)]** | **1 piece (SPQ 10)[1)]** | **1 piece (SPQ 10)[1)]** |
| 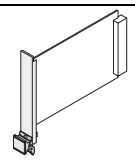 04608114 | **3 U Height** bottom | | | | | |
| | 20817-858 | 20817-854 | 20817-856 | 20817-833 | 20817-829 | 20817-831 |
| 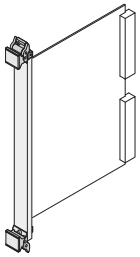 04608115 | **6 U Height** top | | | | | |
| | 20817-858 | 20817-854 | 20817-856 | 20817-833 | 20817-829 | 20817-831 |
| | bottom | | | | | |
| | 20817-858 | 20817-854 | 20817-856 | 20817-833 | 20817-829 | 20817-831 |
| Dimensions see page | 7.37 | | | 7.37 | | |

1) SPQ (standard pack quantity): Part number includes 1 piece, but delivery is exclusively made in standard pack quantity (SPQ); please order at least the SPQ quantity or a multiple

Part no. includes one packing unit (PU); delivery is exclusively made in PU

Individual components

## Fixing material for trapeziform extractor handle, type 2

### Order Information

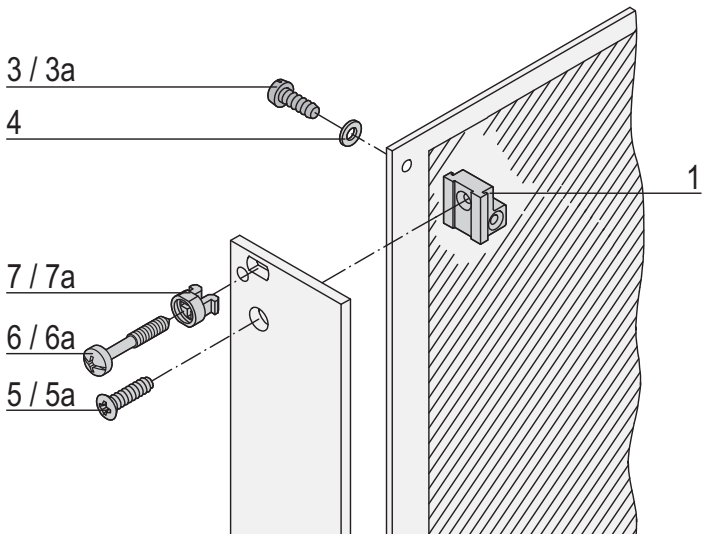


| Fixing material | Item | | Required quantity 3 U < 8 HP | Required quantity 3 U ≥ 8 HP | Required quantity 6 U < 8 HP | Required quantity 6 U ≥ 8 HP | Qty/PU | Part no. |
|---|---|---|---|---|---|---|---|---|
| Printed board bracket<br>Zn die-cast | 1 | 06707050 | 1 | 1 | – | – | 1 Stück (LLG 10)[1)] | 60807-181 |
| Pozidrive panhead screw<br>M2.5 × 6, St, nickel-plated | 3 | AZA45177 | 2 | 2 | 2 | 2 | 100 | 21101-219 |
| Slotted panhead screw with Torx 8<br>M2.5 × 6, St, zinc-plated<br>Self-securing thread | 3a | aza45940 | 2 | 2 | 2 | 2 | 100 | 24560-159 |
| Washer<br>2.7, St, nickel-plated | 4 | AZA46586 | 2 | 2 | 2 | 2 | 100 | 21100-721 |
| Raised Pozidrive countersunk panhead screw<br>M2.5 × 8, St, nickel-plated | 5 | 06702056 | 1 | 1 | – | – | 100 | 21100-429 |
| Raised countersunk panhead screw with Torx 8<br>M2.5 × 8, St, nickel-plated | 5a | 06708050 | 1 | 1 | – | – | 100 | 24560-164 |
| Slotted Pozidrive collar screw<br>M2.5 × 11, St, nickel-plated<br>AZA46586 | 6 | AZA46586 | 1 | 3 | – | 2 | 100 | 21100-748 |
| Slotted Pozidrive collar screw<br>M2.5 × 12.3, St, nickel-plated<br>AZA46586 | 6a | AZA46586 | 1 | 3 | – | 2 | 100 | 21101-101 |
| Plastic sleeve, for form hole 5.9 x 3.3<br>PA, UL 90 V-2, grey | 7 | aza45933 | 1 | 3 | – | 2 | 100 | 21100-464 |
| Metal sleeve, for form hole 5.9 x 3.3, press-in<br>Stainless steal | 7a | aza45934 | 1 | 3 | – | 2 | 100 | 21100-662 |

1) SPQ (standard pack quantity): Part number includes 1 piece, but delivery is exclusively made in standard pack quantity (SPQ); please order at least the SPQ quantity or a multiple

## Dimensions Front panels, U profiles, for trapeziform extractor handles, type 2

**3 U**

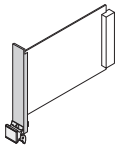

04608109

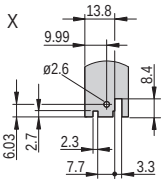


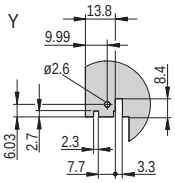


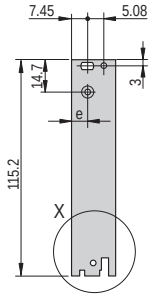


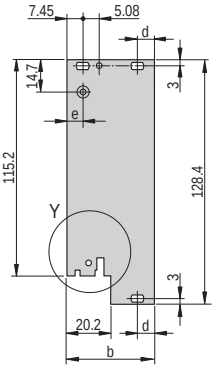


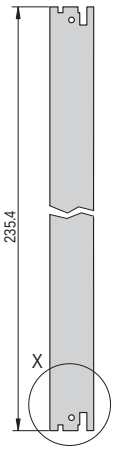


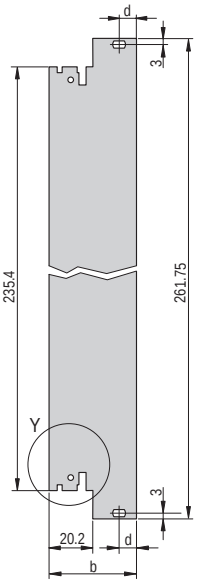


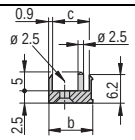


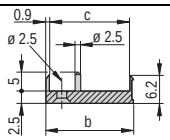


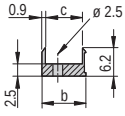


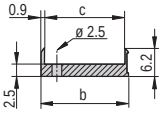


shieldable

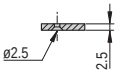


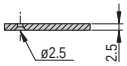





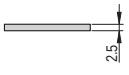


unshielded

04608064 04608077

04608065 04608078

4 HP ≥5 HP 4 HP ≥5 HP

**6 U**

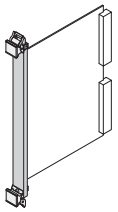

04608107

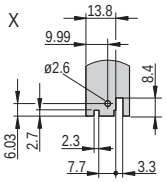


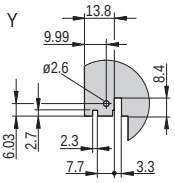


### Dimensions table

| Width HP | b mm | c mm | d mm |
|---|---|---|---|
| 4 | 19.98 | 17.45 | – |
| 5 | 25.06 | 22.53 | – |
| 6 | 30.14 | 27.61 | – |
| 7 | 35.22 | 32.69 | – |
| 8 | 40.30 | 37.77 | 7.45 |
| 9 | 45.38 | 42.85 | 7.45 |
| 10 | 50.46 | 47.93 | 7.45 |
| 11 | 55.54 | 53.01 | 7.45 |
| 12 | 60.62 | 58.09 | 7.45 |
| 14 | 70.78 | 68.25 | 7.45 |
| 16 | 80.94 | 78.41 | 7.45 |



Part number in bold face type: ready for despatch within 2 working days
Part number in normal type: ready for despatch within 10 working days

## Dimension drawings — Extractor handle, trapeziform, type 2

with alignment pin

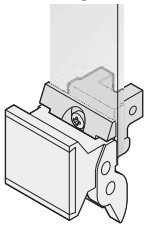

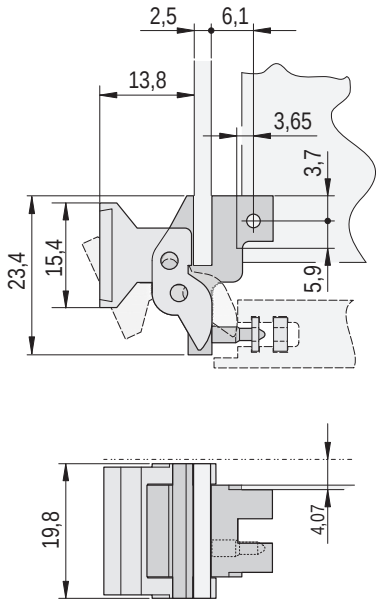


without alignment pin

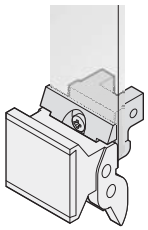

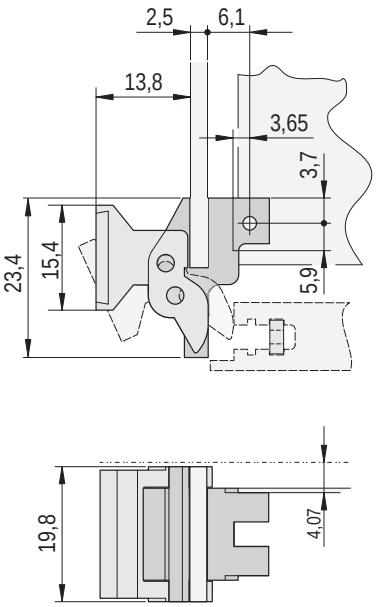

## Kits

## Plug-in units with trapeziform extractor handle, type 1 – front panel, U-profile, shielded

3 U

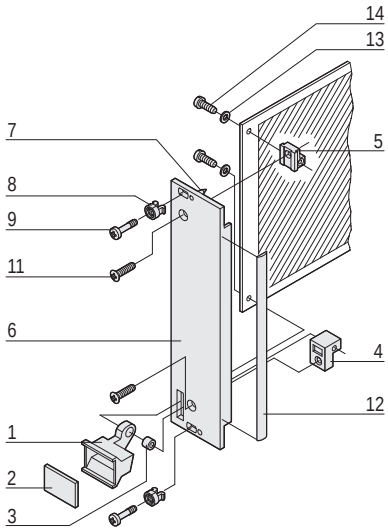


04602058

6 U

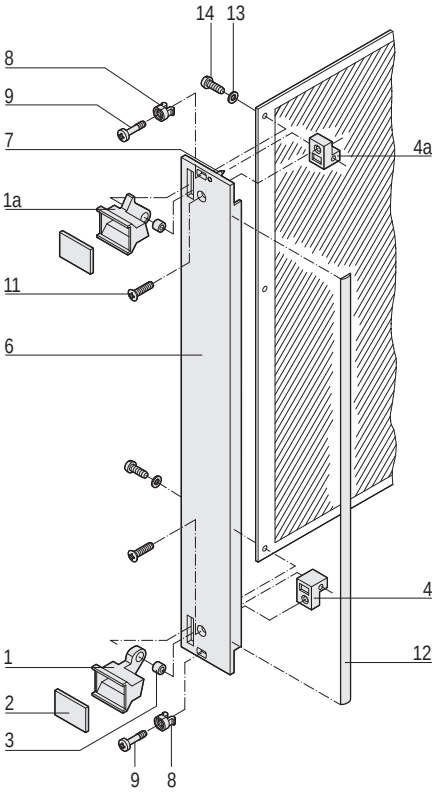


04602059

- At 6 U the board position can be offset by 1 HP to the right by swapping the top and bottom board supports; thus space is created for SMD components on the left (solder) side; for board thickness 1.6 mm only

### Delivery comprises (kit)

| Item | Qty 3 U | Qty 6 U | Description |
|---|---|---|---|
| 1 | 1 | 1 | Extractor handle, trapeziform type, PPE, grey, bottom |
| 1a | - | 1 | Extractor handle, trapeziform type, PPE, grey, top |
| 2 | 1 | 2 | Identification plate, Al, 1.5 mm, anodised, cut edges plain |
| 3 | 1 | 2 | Pivot bush, Ms |
| 4 | 1 | 1 | Board support, die-cast zinc, bottom |
| 4a | - | 1 | Board support, die-cast zinc, top |
| 5 | 1 | - | Board support, die-cast zinc |
| 6 | 1 | 1 | Front panel, U profile, for trapeziform extractor handle, front anodised, rear conductive |
| 7 | 2 | 2 | Alignment pin, pressed-in, stainless steel |
| 8 | 2 | 2 | Sleeve, PA, grey, up to 7 HP front panel width |
| 8 | 4 | 4 | Sleeve, PA, grey, from 8 HP front panel width |
| 9 | 2 | 2 | Collar screw, Pozidrive/slot, St, nickel-plated, M2.5 × 12.3, front panel width up to 7 HP |
| 9 | 4 | 4 | Collar screw, Pozidrive/slot, St, nickel-plated, M2.5 × 12.3, front panel width from 8 HP |
| 11 | 1 | 2 | Raised countersunk panhead screw, M2.5 × 8 |
| 12 | 1 | 1 | EMC gasket (textile) |
| 13 | 2 | 2 | Washer, A2.7, DIN 125 |
| 14 | 2 | 2 | Pozidrive flathead screw, St, nickel-plated, M2.5 × 10 |

### Order Information

| Width HP | 3 U Part no. | 6 U Part no. |
|---|---|---|
| 4 | 20848-485 | 20848-492 |
| 6 | 20848-487 | 20848-494 |
| 8 | 20848-489 | 20848-496 |
| 10 | 20848-490 | 20848-497 |
| 12 | 20848-491 | 20848-498 |

**For further information www.schroff.biz/oneclick**
oneClick search code = Part no.



Part number in bold face type: ready for despatch within 2 working days
Part number in normal type: ready for despatch within 10 working days

## Kits

## Plug-in units with trapeziform extractor handle, type 1 – front panel unshielded

3 U

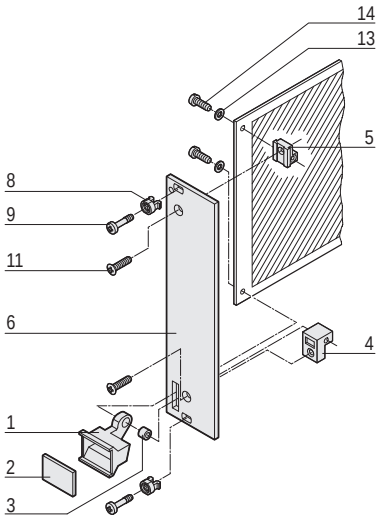


04602060

6 U

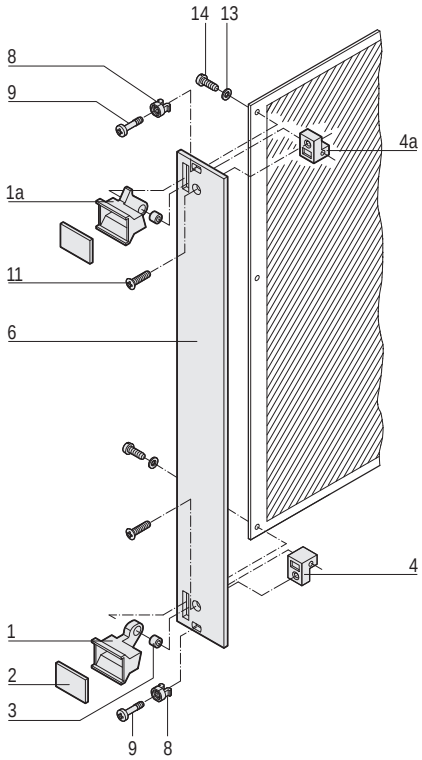


04602061

- At 6 U the board position can be offset by 1 HP to the right by swapping the top and bottom board supports; thus space is created for SMD components on the left (solder) side; for board thickness 1.6 mm only

### Delivery comprises (kit)

| Item | Qty 3 U | Qty 6 U | Description |
|---|---|---|---|
| 1 | 1 | 1 | Extractor handle, trapezium shape, PPE, grey, bottom |
| 1a | – | 1 | Extractor handle, trapezium shape, PPE, grey, top |
| 2 | 1 | 2 | Identification plate, Al, 1.5 mm, anodised, cut edges plain |
| 3 | 1 | 2 | Pivot bush, Ms |
| 4 | 1 | 1 | Board support, die-cast zinc, bottom |
| 4a | – | 1 | Board support, die-cast zinc, top |
| 5 | 1 | – | Board support, die-cast zinc |
| 6 | 1 | 1 | Front panel for trapeziform extractor handle, front anodised, rear irisdescent green chromated |
| 8 | 2 | 2 | Sleeve, PA, grey, up to 7 HP front panel width |
| 8 | 4 | 4 | Sleeve, PA, grey, from 8 HP front panel width |
| 9 | 2 | 2 | Collar screw, Pozidrive/slot, St, nickel-plated, M2.5 × 11 and 12.3, front panel width up to 7 HP |
| 9 | 4 | 4 | Collar screw, Pozidrive/slot, St, nickel-plated, M2.5 × 11 and 12.3, front panel width from 8 HP |
| 11 | 1 | 2 | Raised countersunk panhead screw, M2.5 × 8 |
| 13 | 2 | 2 | Washer, A2.7, DIN 125 |
| 14 | 2 | 2 | Pozidrive flathead screw, St, nickel-plated, M2.5 × 10 |

### Order Information

| Width HP | 3 U Part no. | 6 U Part no. |
|---|---|---|
| 4 | 20817-443 | 20817-448 |
| 5 | 20817-444 | 20817-449 |
| 6 | 20817-445 | 20817-450 |
| 7 | 20817-446 | 20817-451 |
| 8 | 20817-447 | 20817-452 |
| 10 | 20817-456 | 20817-458 |
| 12 | 20817-457 | 20817-459 |

**For further information www.schroff.biz/oneclick**
oneClick search code = Part no.

## Individual components — Front panels and EMC gaskets, for trapezoidal extractor handle, type 1

### Order Information

| | Width HP | Front panel, U profile, shieldable | Textile EMC gasket | | Front panel, unshielded |
|---|---|---|---|---|---|
| | | 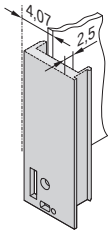 04608091 | 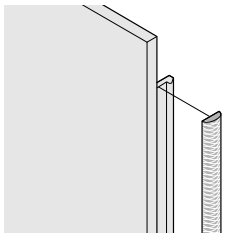 BGA45760 | | 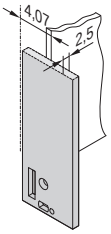 04608092 |
| | | Al profile, front anodised, rear conductive, alignment pin pressed-in, stainless steel | always fixed laterally on the front panel, in the groove of the profile, textile gasket, core: foam, sleeve: textile cladding with CuNi coating, UL 94 V-0, temperature range -40 ... 70 °C | | front panel, Al, 2.5 mm, front anodised, rear irisdescent green chromated |
| | | **1 piece (SPQ 5)[1)]** | **PU 10 pieces** | **PU 100 pieces** | **1 piece (SPQ 5)[1)]** |
| 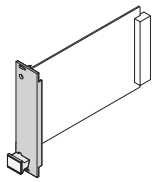 04608117 | | **3 U Height** | | | |
| | 4 | 30848-461 | 21101-853 | 21101-854 | 30847-659 |
| | 5 | – | | | 30847-660 |
| | 6 | 30848-463 | | | 30847-661 |
| | 7 | – | | | 30847-662 |
| | 8 | 30848-465 | | | 30847-663 |
| | 10 | 30848-466 | | | 30847-664 |
| | 12 | 30848-467 | | | 30847-665 |
| 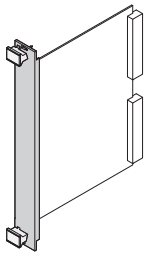 04608116 | | **6 U Height** | | | |
| | 4 | 30848-468 | 21101-855 | 21101-856 | 30847-666 |
| | 5 | – | | | 30847-667 |
| | 6 | 30848-470 | | | 30847-668 |
| | 7 | – | | | 30847-669 |
| | 8 | 30848-472 | | | 30847-670 |
| | 10 | 30848-473 | | | 30847-671 |
| | 12 | 30848-474 | | | 30847-672 |
| Dimensions see page | | 7.43 | | | 7.43 |

1) SPQ (standard pack quantity): Part number includes 1 piece, but delivery is exclusively made in standard pack quantity (SPQ); please order at least the SPQ quantity or a multiple

Part no. includes one packing unit (PU); delivery is exclusively made in PU

Individual components

## Trapeziform extractor handles, type 1

### Order Information

| Width HP | Trapeziform extractor handle black<br>1 piece (SPQ 10)[1)] | Trapeziform extractor handle grey<br>1 piece (SPQ 10)[1)] |
|---|---|---|
| |  04608093 |  04608094 |
| | handle closed laterally, PPE, UL 94 V-1, black; pivot bush; identification plate, Al, 1.5 mm, anodised, cut edges plain; board support die-cast zinc; in the 6 U version, space can be created for SMD components on the left side by swapping the top and bottom handles and thus moving the PCB position 1 HP to the right | |
| 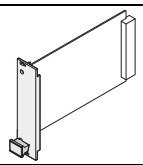 04608119 | **3 U Height** top | |
| | 20817-329 | 20817-327 |
| 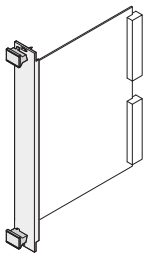 04608118 | **6 U Height** top | |
| | 20817-330 | 20817-328 |
| | bottom | |
| | 20817-329 | 20817-327 |

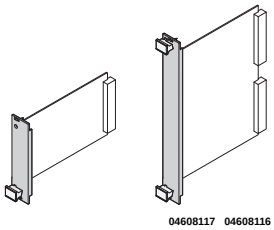


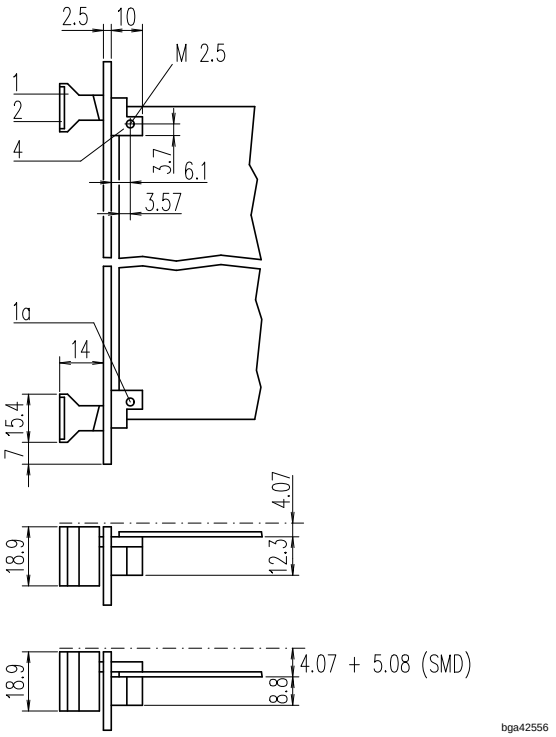


1) SPQ (standard pack quantity): Part number includes 1 piece, but delivery is exclusively made in standard pack quantity (SPQ); please order at least the SPQ quantity or a multiple

## Individual components — Fixing material for trapeziform extractor handle, type 1

### Order Information

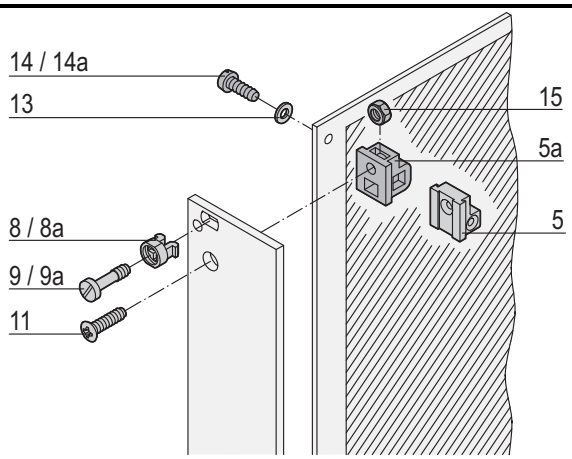


bga42545

| Fixing material | Item | | Required Qty 3 U < 8 HP | Required Qty 3 U ≥ 8 HP | Required Qty 6 U < 8 HP | Required Qty 6 U ≥ 8 HP | Qty/PU | Part no. |
|---|---|---|---|---|---|---|---|---|
| Board support, die-cast zinc, with thread M2.5, for front panel and PCB fixing | 5 | 06707050 | 1 | 2 | 2 | 4 | 1 piece (SPQ 10)[1] | 60807-181 |
| Board support, plastic, PBT, UL 94 V-0, grey, with recess for hexagon nut M2.5, for fixing front panel | 5a | AZA45177 | 1 | 2 | 2 | 4 | 1 piece (SPQ 10)[1] | 60807-183 |
| Plastic sleeve, for form hole 5.9 x 3.3 PA, UL 90 V-2, grey | 8 | aza45933 | 2 | 4 | 2 | 4 | 100 | 21100-464 |
| Metal sleeve, for form hole 5.9 x 3.3, press-in Stainless steal | 8a | aza45934 | 2 | 4 | – | – | 100 | 21100-662 |
| Pozidrive/slotted collar screw M2.5 × 11, St, nickel-plated AZA46586 | 9 | AZA46586 | 2 | 4 | 2 | 4 | 100 | 21100-748 |
| Pozidrive/slotted collar screw M2.5 × 12.3, St, nickel-plated AZA46586 | 9a | AZA46586 | 2 | 4 | 2 | 4 | 100 | 21101-101 |
| Raised Pozidrive countersunk screw M2.5 × 8, St, nickel-plated | 11 | 06702056 | 2 | 2 | 2 | 2 | 100 | 21100-429 |
| Washer 2.7 DIN 125, St, nickel-plated, 100 pieces | 13 | AZA46586 | 2 | 2 | 2 | 2 | 100 | 21100-721 |
| Pozidrive panhead screw M2.5 × 10, St, nickel-plated for item 5 | 14 | AZA45177 | 2 | 2 | 2 | 2 | 100 | 21101-220 |
| Panhead screw, self-tapping 2.5 x 8, St, zinc-plated for item 5b | 14a | 06702057 | 1 | 1 | – | – | 100 | 21100-710 |
| Hexagon nut M2.5, nickel-plated steel for item 5b | 15 | aza43239 | 1 | 1 | – | – | 100 | 21100-144 |

1) SPQ (standard pack quantity): Part number includes 1 piece, but delivery is exclusively made in standard pack quantity (SPQ); please order at least the SPQ quantity or a multiple

## Dimensions — Front panels for trapezoidal extractor handles, type 1, shielded/unshielded

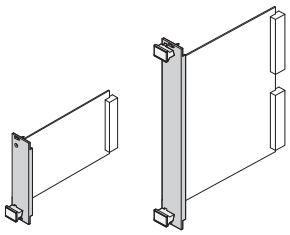

04608117 04608116

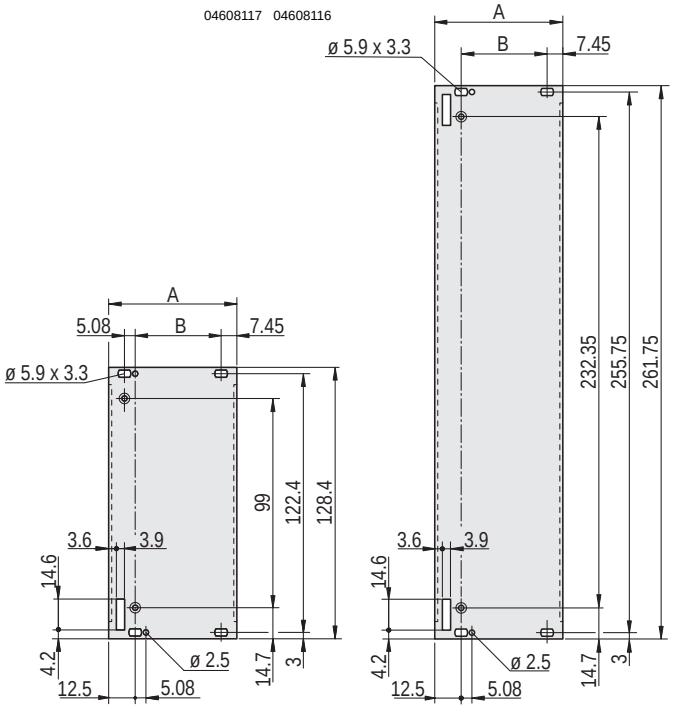


04603064

3 U 6 U

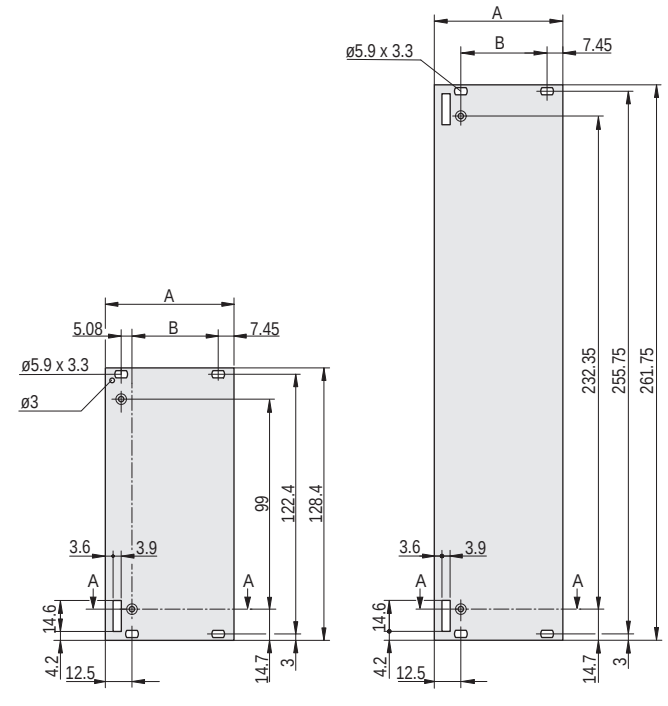


04603063

3 U 6 U

### Dimensions table

| Width HP | A mm | B mm |
|---|---|---|
| 4 | 19.98 | – |
| 5 | 25.06 | – |
| 6 | 30.14 | – |
| 7 | 35.22 | – |
| 8 | 40.30 | 20.32 |
| 10 | 50.46 | 30.48 |
| 12 | 60.62 | 40.64 |

## Individual components — Front panels/extractor handles for Multibus® II, symmetrical/SMDversion

### Order Information

| | | U front profile | Mounting block for D-Sub connector (50 pin) | Extractor handle for Multibus® II symmetrical handle grey, RAL 7032 | Extractor handle for Multibus® II SMD handle grey, RAL 7032 |
|---|---|---|---|---|---|
| | | 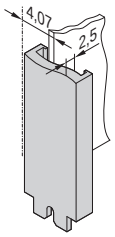 04608095 | 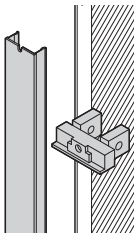 04608098 | 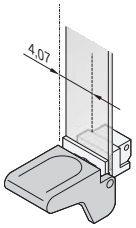 04608099 | 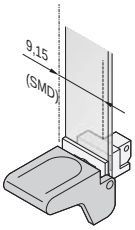 04608108 |
| | | Al extrusion, 1 mm | for fixing D-Sub connectors 50-pin, thread on front UNC4/40; required quantity: for 6 U 1x, for 9 U 2x | extractor handle for Multibus® II, PC, UL 94 V-0; bearing, Zn die-cast, nickel-plated; slotted cheesehead screw, M2.5 x 6, Pozidrive/slotted collar screw, M2.5 × 12.3, St, nickel-plated in the 6 U version, space can be created for SMD components on the left side by swapping the top and bottom handles and thus moving the PCB position 1 HP to the right | |
| | **Width HP** | **1 piece (SPQ 5)[1)]** | **1 piece (SPQ 10)[1)]** | **1 piece (SPQ 10)[1)]** | **1 piece (SPQ 10)[1)]** |
| 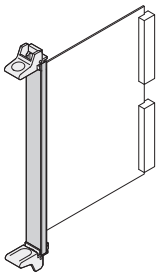 04608120 | | **6 U Height** | | **6 U Height** top | |
| | 4 | 30829-001 | 60829-008 | 20829-011 | 20829-004 |
| | | | | bottom | |
| | | | | 20829-011 | 20829-003 |
| | | **9 U Height** | | **9 U Height** top | |
| | 4 | 30829-007 | 60829-008 | 20829-011 | 20829-004 |
| | | | | bottom | |
| | | | | 20829-011 | 20829-003 |
| Dimensions see page | | 7.45 | 7.45 | 7.45 | 7.45 |

1) SPQ (standard pack quantity): Part number includes 1 piece, but delivery is exclusively made in standard pack quantity (SPQ); please order at least the SPQ quantity or a multiple

Part no. includes one packing unit (PU); delivery is exclusively made in PU

## Dimension drawings — Front panels, U profile / front panel for Multibus® II

**6/9 U**

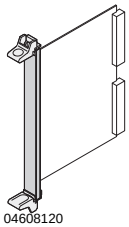


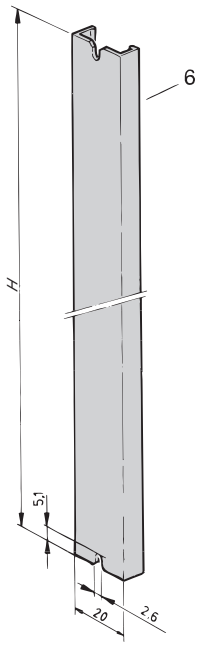


**Dimensions table**

| Height U | Height mm |
|---|---|
| 6 | 230.4 |
| 9 | 363.7 |

A4-2580

**6 U**

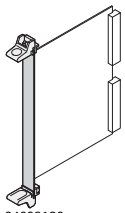


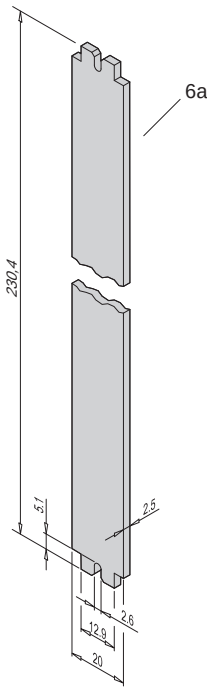


BGA46120

## Dimensions — Extractor handles, mounting block for Multibus® II

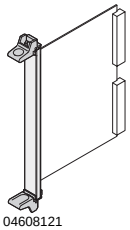


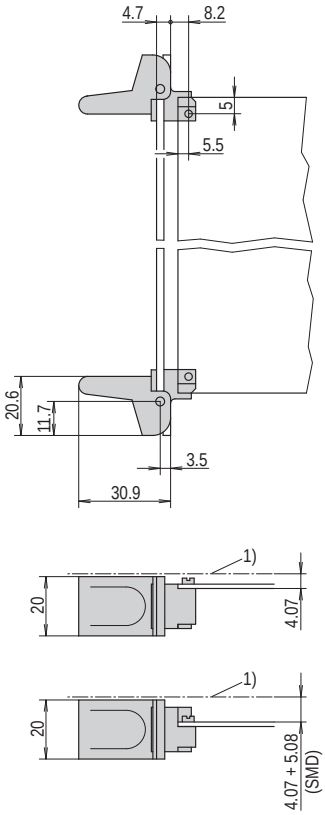


gba42579

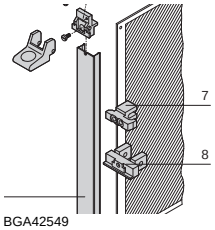


**for D-Sub connector (50 pin)**

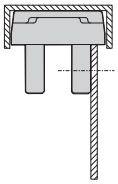

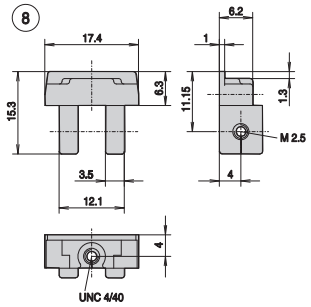


BGA42585

Individual components

## Extractor handles in key form 1

### Order Information

| | Extractor handle | | Front panel | Fixing clip |
|---|---|---|---|---|
| | **black** | **grey** | | |
| | 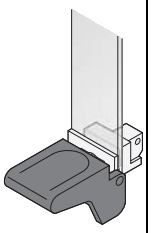 04608101 | 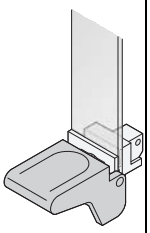 04608102 |  04608103 | 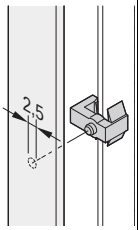 bga42544 |
| | extractor handle in key form 1, PC, UL 94 V-0; bearing Zn die-cast, nickel-plated; slotted cheesehead screw, M2.5 x 6 (fitted); in the 6 U version, space can be created for SMD components on the left side by swapping the top and bottom handles and thus moving the PCB position 1 HP to the right | | Al, 2.5 mm; available on request | for fixing PCB to the front panel (blind hole X2.6, depth 1.3 mm); also for SMD applications; clip, PPE, UL 94 V-0, red |
| **Width HP** | **1 piece (SPQ 10)[1)]** | **1 piece (SPQ 10)[1)]** | | **PU 100 pieces** |
| 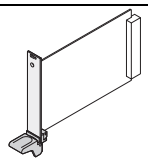 04608123 | **3 U Height** bottom | | | |
| | 20817-345 | 20817-325 | – | – |
| 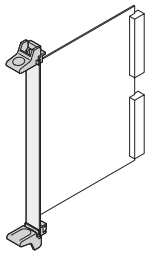 04608122 | **6 U Height** top | | | |
| | 20817-346 | 20817-326 | – | 21100-719 |
| | bottom | | | |
| | 20817-345 | 20817-325 | – | |
| Dimensions see page | 7.48 | 7.48 | 7.48 | |

1) SPQ (standard pack quantity): Part number includes 1 piece, but delivery is exclusively made in standard pack quantity (SPQ); please order at least the SPQ quantity or a multiple

Part no. includes one packing unit (PU); delivery is exclusively made in PU

Individual components

## Fixing material for extractor handle in key form 1

### Order Information

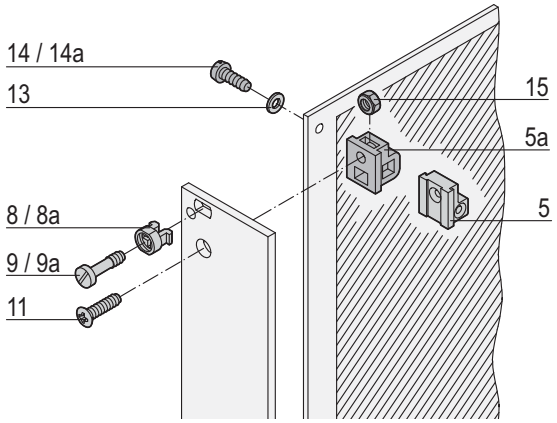


bga42545

| Fixing material | Item | | Required Qty 3 U | Required Qty 6 U | Qty/PU | Part no. |
|---|---|---|---|---|---|---|
| Board support, die-cast zinc, with thread M2.5, for front panel and PCB fixing | 5 | 06707050 | 1 | – | 1 piece (SPQ 10)[1)] | 60807-181 |
| Board support, plastic, PBT, UL 94 V-0, grey, with recess for hexagon nut M2.5, for fixing front panel | 5a | AZA45177 | 1 | – | 1 piece (SPQ 10)[1)] | 60807-183 |
| Plastic sleeve, for form hole 5.9 x 3.3 PA, UL 90 V-2, grey | 8 | aza45933 | 1 | – | 100 | 21100-464 |
| Metal sleeve, for form hole 5.9 x 3.3, press-in Stainless steal | 8a | aza45934 | 1 | – | 100 | 21100-662 |
| Pozidrive/slotted collar screw M2.5 × 11, St, nickel-plated | 9 | AZA46586 | 2 | 2 | 100 | 21100-748 |
| Pozidrive/slotted collar screw M2.5 × 12.3, St, nickel-plated | 9a | AZA46586 | 2 | 2 | 100 | 21101-101 |
| Raised Pozidrive countersunk screw M2.5 × 8, St, nickel-plated | 11 | 06702056 | 1 | – | 100 | 21100-429 |
| Washer 2.7 DIN 125, St, nickel-plated, 100 pieces | 13 | AZA46586 | 2 | 2 | 100 | 21100-721 |
| Pozidrive panhead screw M2.5 × 10, St, nickel-plated for item 5 | 14 | AZA45177 | 2 | 2 | 100 | 21101-220 |
| Pan head screw, self-tapping 2.5 x 8, St, zinc-plated for item 5b | 14a | 06702057 | 1 | – | 100 | 21100-710 |
| Hexagon nut M2.5, nickel-plated steel for item 5b | 15 | aza43239 | 3 | 6 | 100 | 21100-144 |

1) SPQ (standard pack quantity): Part number includes 1 piece, but delivery is exclusively made in standard pack quantity (SPQ); please order at least the SPQ quantity or a multiple

## Dimensions Extractor handles/front panels key form 1

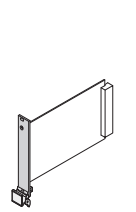

04608089 04603055

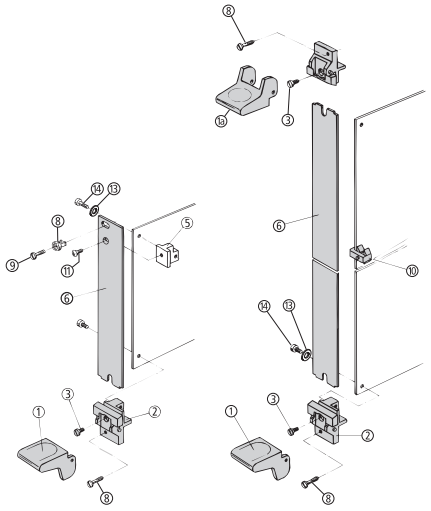

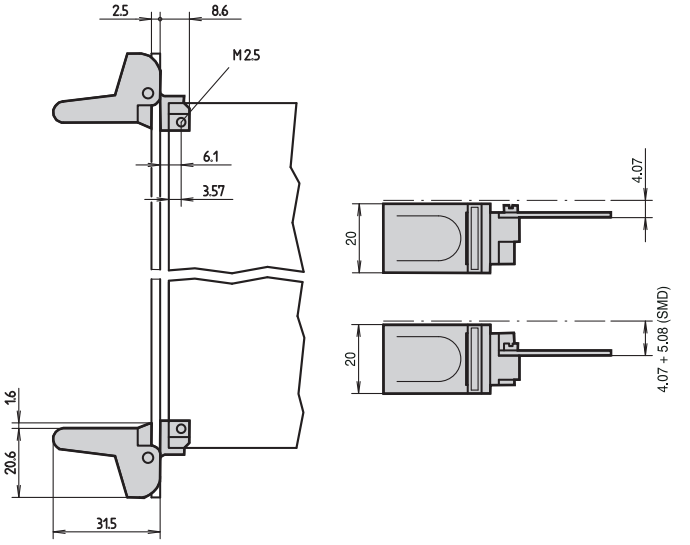


04603056

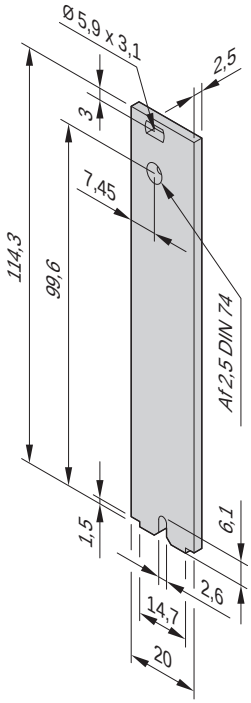


3 U

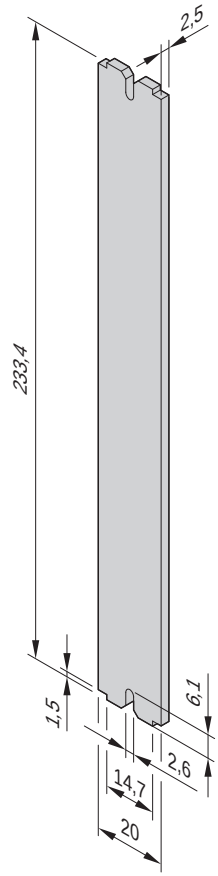


6 U

04603057



Part number in bold face type: ready for despatch within 2 working days
Part number in normal type: ready for despatch within 10 working days

## Individual components Extractor handles in key form 2

### Order Information

| | Extractor handle black | Front panel |
|---|---|---|
| | 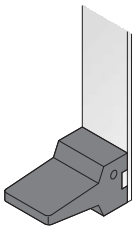 04608104 | 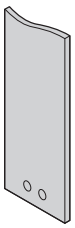 04608106 |
| | extractor handle, PBT, UL 90 V-0; bearing Zn die-cast, nickel-plated; incl. assembly kit for handle mounting | Al, 2.5 mm; available on request |
| Width HP | 1 piece (SPQ 10)[1] | |
| 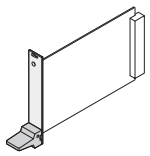 04608124 | **3 U Height** top | |
| | 20808-137 | – |
| 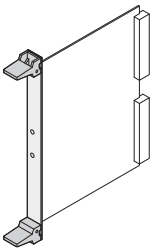 04608125 | **6 U Height** top | |
| | 20808-137 | – |
| | bottom | |
| | 20808-137 | – |
| Dimensions see page | 7.51 | 7.51 |

1) SPQ (standard pack quantity): Part number includes 1 piece, but delivery is exclusively made in standard pack quantity (SPQ);
please order at least the SPQ quantity or a multiple
Part no. includes one packing unit (PU); delivery is exclusively made in PU

## Fixing material for extractor handles, key form 2

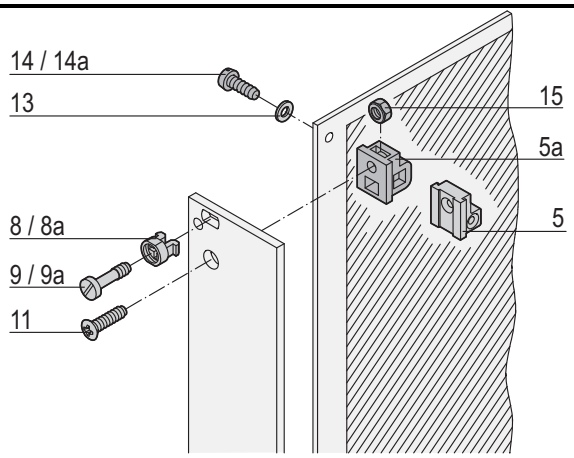


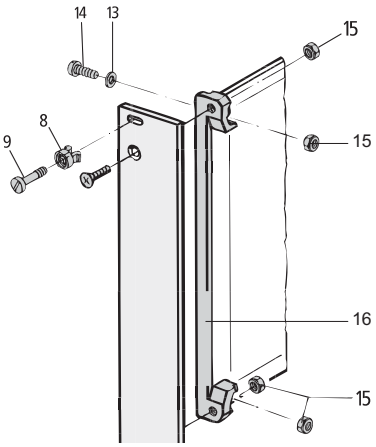


| Fixing material | Item | | Required Qty | | Qty/PU | Part no. |
|---|---|---|---|---|---|---|
| | | | 3 U | 6 U | | |
| Board support, die-cast zinc, with thread M2.5, for front panel and PCB fixing | 5 |  06707050 | 1 | 2 | 1 piece (SPQ 10)[1)] | 60807-181 |
| Board support, plastic, PBT, UL 94 V-0, grey, with recess for hexagon nut M2.5, for fixing front panel | 5a |  AZA45177 | 1 | 2 | 1 piece (SPQ 10)[1)] | 60807-183 |
| Plastic sleeve, for form hole 5.9 x 3.3 PA, UL 90 V-2, grey | 8 |  aza45933 | 1 | – | 100 | 21100-464 |
| Metal sleeve, for form hole 5.9 x 3.3, press-in Stainless steal | 8a |  aza45934 | 1 | – | 100 | 21100-662 |
| Pozidrive/slotted collar screw M2.5 × 11, St, nickel-plated | 9 |  AZA46586 | 2 | 2 | 100 | 21100-748 |
| Pozidrive/slotted collar screw M2.5 × 12.3, St, nickel-plated | 9a |  AZA46586 | 2 | 2 | 100 | 21101-101 |
| Raised Pozidrive countersunk screw M2.5 × 8, St, nickel-plated | 11 |  06702056 | 1 | – | 100 | 21100-429 |
| Washer 2.7 DIN 125, St, nickel-plated, 100 pieces | 13 |  AZA46586 | 2 | 2 | 100 | 21100-721 |
| Pozidrive panhead screw M2.5 × 10, St, nickel-plated for item 5 | 14 |  AZA45177 | 2 | 2 | 100 | 21101-220 |
| Panhead screw, self-tapping 2.5 x 8, St, zinc-plated for item 5b | 14a |  06702057 | 1 | – | 100 | 21100-710 |
| Hexagon nut M2.5, nickel-plated steel for item 5b | 15 |  aza43239 | 3 | – | 100 | 21100-144 |
| PCB bracket 4 clearance holes for front panel/PCB fixing, 4 recesses for hexagon nuts; PBT, UL 94 V?0, red | 16 |  04608138 | 1 | 2 | 1 piece (SPQ 10) | 60807-011 |

1) SPQ (standard pack quantity): Part number includes 1 piece, but delivery is exclusively made in standard pack quantity (SPQ); please order at least the SPQ quantity or a multiple

# Plug-in units – for IEC 60297, key form 2

## Dimensions Handles/front panels key form 2

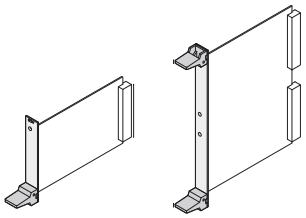

04608124 04608125

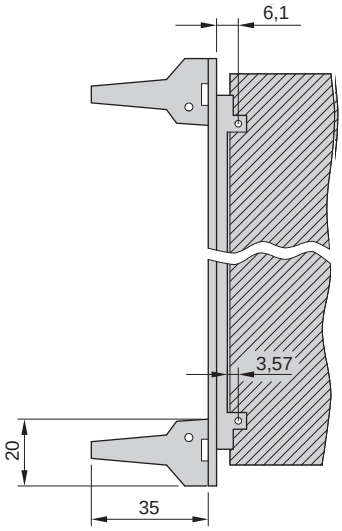


BGA42573

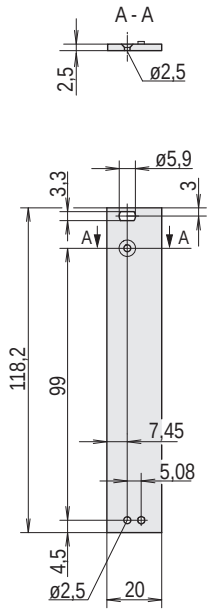


3 U

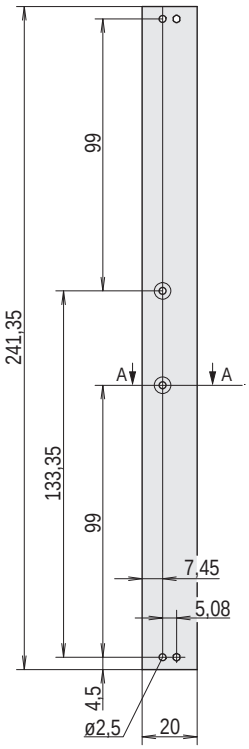


6 U

BGA42578

## Dimensions Drill hole dimensions on the PCB key form 2

**3 U**

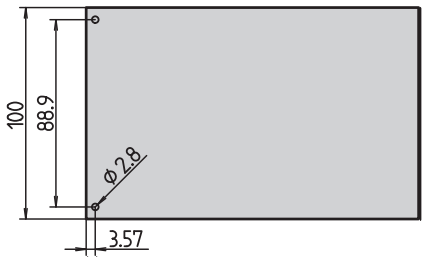


BGA43076

**6 U**

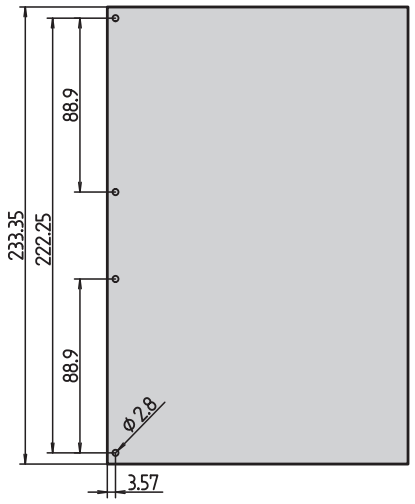


BGA43077

## Kits

## Plug-in unit with static trapeziform handle

3 U

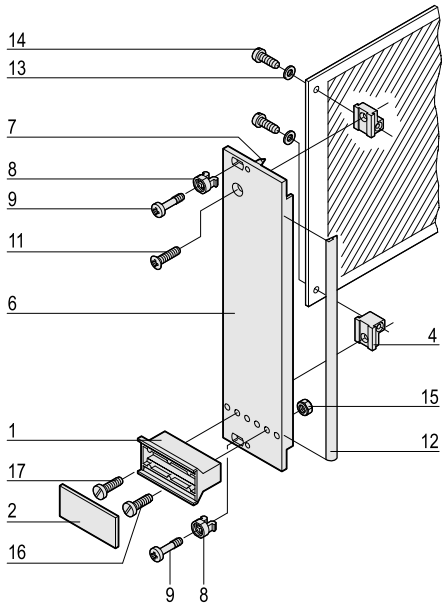


04602062

6 U

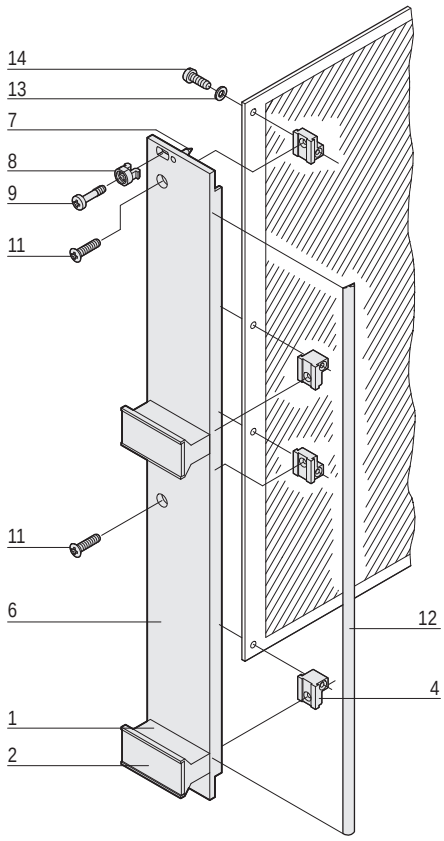


04602063

- Front panel, U-profile, shielded
- Handle without extraction function

### Delivery comprises

| Item | Qty | | Description |
|---|---|---|---|
| | 3 U | 6 U | |
| 1 | 1 | 2 | Plastic handle, trapeziform, PPE, grey |
| 2 | 1 | 2 | Identification plate, Al, 1.5 mm, anodised, cut edges plain |
| 4 | 2 | 4 | Board support, die-cast zinc |
| 6 | 1 | 1 | Front panel, U profile, for trapeziform handle, front anodised, rear conductive |
| 7 | 2 | 2 | Alignment pin, pressed-in, stainless steel |
| 8 | 2 | 2 | Sleeve, PA, grey, up to 7 HP front panel width |
| 8 | 4 | 4 | Sleeve, PA, grey, from 8 HP front panel width |
| 9 | 2 | 2 | Pozidrive/slotted collar screw, St, nickel-plated, M2.5 × 11 and 12.3, front panel width up to 7 HP |
| 9 | 4 | 4 | Pozidrive/slotted collar screw, St, nickel-plated, M2.5 × 11 and 12.3, front panel width from 8 HP |
| 11 | 1 | 2 | Raised countersunk screw, St, nickel-plated, M2.5 × 8 |
| 12 | 1 | 1 | EMC sealing (textile) |
| 13 | 2 | 4 | Washer, A2.7, DIN 125 |
| 14 | 2 | 4 | Pozidrive flathead screw, St, nickel-plated, M2.5 × 10 |
| 15 | 1 | 2 | Hexagon nut, St, nickel-plated, M2.5 |
| 16 | 1 | 2 | Pozidrive flathead screw, St, nickel-plated, M2.5 × 12 |
| 17 | 1 | 2 | Pozidrive flathead screw, St, nickel-plated, M2.5 × 16 |

### Order Information

| Width HP | 3 U Part no. | 6 U Part no. |
|---|---|---|
| 3 | 20848-663 | 20848-671 |
| 4 | 20848-664 | 20848-672 |
| 5 | 20848-665 | 20848-673 |
| 6 | 20848-666 | 20848-674 |
| 7 | 20848-667 | 20848-675 |
| 8 | 20848-668 | 20848-676 |
| 10 | 20848-669 | 20848-677 |
| 12 | 20848-670 | 20848-678 |

**For further information www.schroff.biz/oneclick**
oneClick search code = Part no.



Part number in bold face type: ready for despatch within 2 working days
Part number in normal type: ready for despatch within 10 working days

## Kits

## Plug-in unit with static trapeziform handle

3 U

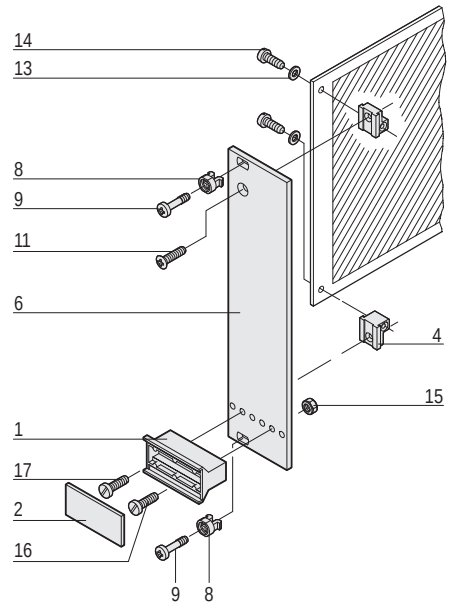


04602064

6 U

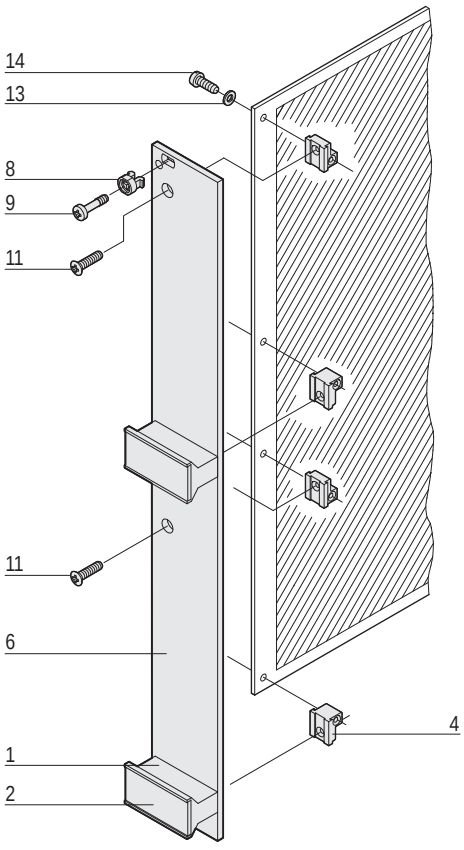


04602065

- Front panel unshielded
- Handle without extraction function

### Delivery comprises

| Item | Qty | | Description |
|---|---|---|---|
| | 3 U | 6 U | |
| 1 | 1 | 2 | Plastic handle, trapeziform, PPE, grey |
| 2 | 1 | 2 | Identification plate, Al, 1.5 mm, anodised, cut edges untreated |
| 4 | 2 | 4 | Board support, die-cast zinc |
| 6 | 1 | 1 | Front panel for trapeziform handle, front anodised, rear irisdescent green chromated |
| 8 | 2 | 2 | Sleeve, PA, grey, up to 7 HP front panel width |
| 8 | 4 | 4 | Sleeve, PA, grey, from 8 HP front panel width |
| 9 | 2 | 2 | Pozidrive/slotted collar screw, St, nickel-plated, M2.5 × 11 and 12.3, front panel width up to 7 HP |
| 9 | 4 | 4 | Pozidrive/slotted collar screw, St, nickel-plated, M2.5 × 11 and 12.3, front panel width from 8 HP |
| 11 | 1 | 2 | Raised countersunk screw, St, nickel-plated, M2.5 × 8 |
| 13 | 2 | 4 | Washer, A2.7 |
| 14 | 2 | 4 | Pozidrive flathead screw, St, nickel-plated, M2.5 × 8 |
| 15 | 1 | 2 | Hexagon nut, St, nickel-plated, M2.5 |
| 16 | 1 | 2 | Pozidrive flathead screw, St, nickel-plated, M2.5 × 12 |
| 17 | 1 | 2 | Pozidrive flathead screw, St, nickel-plated, M2.5 × 16 |

### Order Information

| Width | 3 U | 6 U |
|---|---|---|
| HP | Part no. | Part no. |
| 3 | 20818-017 | 20809-507 |
| 4 | 20818-018 | 20818-025 |
| 5 | 20818-019 | 20818-026 |
| 6 | 20818-020 | 20818-027 |
| 7 | 20818-021 | 20818-162 |
| 8 | 20818-022 | 20818-028 |
| 10 | 20818-023 | 20818-029 |
| 12 | 20818-024 | 20818-120 |

**For further information www.schroff.biz/oneclick**
oneClick search code = Part no.

## Order Information

| | Width HP | Front panel, U-profile, shieldable: Front panel, U-profile | Front panel, U-profile, shieldable: Textile EMC gasket, PU 10 pieces | Front panel, U-profile, shieldable: Textile EMC gasket, PU 100 pieces | Front panel unshielded |
|---|---|---|---|---|---|
| | | 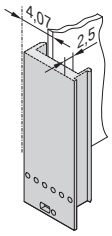 04608130 | 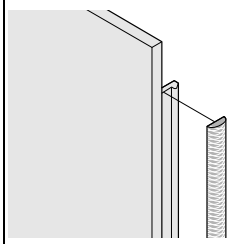 bga45760 | | 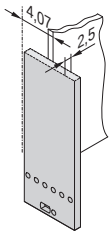 04608131 |
| | | Al extrusion, front anodised, rear conductive, alignment pin pressed-in, stainless steel | always fixed laterally on the front panel, in the groove of the profile, textile gasket, core: foam, sleeve: textile cladding with CuNi coating, UL 94 V-0, temperature range -40 ... 70 °C | | front panel, Al 2.5 mm; front anodised; rear iridescent green chromated |
| | | **1 piece (SPQ 5)[1)]** | **PU 10 pieces** | **PU 100 pieces** | **1 piece (SPQ 5)[1)]** |
| | | **3 U Height** | | | |
| 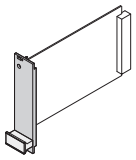 04608126 | 3 | 30849-086 | 21101-853 | 21101-854 | 30847-602 |
| | 4 | 30849-087 | | | 30847-603 |
| | 5 | 30849-088 | | | 30847-604 |
| | 6 | 30849-089 | | | 30847-605 |
| | 7 | 30849-090 | | | 30847-606 |
| | 8 | 30849-091 | | | 30847-607 |
| | 10 | 30849-092 | | | 30847-608 |
| | 12 | 30849-093 | | | 30847-609 |
| | | **6 U Height** | | | |
| 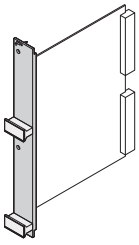 04608127 | 3 | 30849-097 | 21101-855 | 21101-856 | 30847-625 |
| | 4 | 30849-098 | | | 30847-626 |
| | 5 | 30849-099 | | | 30847-627 |
| | 6 | 30849-100 | | | 30847-628 |
| | 7 | 30849-101 | | | – |
| | 8 | 30849-102 | | | 30847-630 |
| | 10 | 30849-103 | | | 30847-631 |
| | 12 | 30849-104 | | | – |
| Dimensions see page | | 7.58 | | | 7.58 |

1) SPQ (standard pack quantity): Part number includes 1 piece, but delivery is exclusively made in standard pack quantity (SPQ); please order at least the SPQ quantity or a multiple

Part no. includes one packing unit (PU); delivery is exclusively made in PU

## Order Information

| | | Plastic handle in trapeziform | | | Al profile handle | | |
|---|---|---|---|---|---|---|---|
| | | Trapeziform handle black | Trapeziform handle grey | Fixing clip | Handle | Fixing part for Al profile handle | Square nut |
| | | | | | item 20 | item 21 | item 22 |
| | | 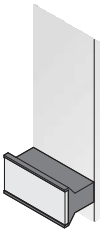 04608132 | 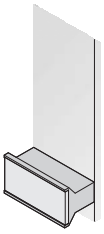 04608133 | 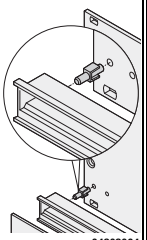 04808064 | 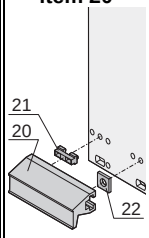  04608134 | 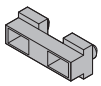 04608135 |  06707050 |
| | | handle: PPE, UL 94 V-1; identification plate: Al, 1.5 mm, anodised, cut edges plain; please order clip separately; required quantity: 1 handle for 3 U, 2 handles for 6 U | | clip, PPE, UL 94 V-0, black, mounting aid from 5 HP to 42 HP | Al extrusion, anodised; fixing part, POM, black; square nut, St, nickel-plated; at length of 1000 mm only Al extrusion | fixing part, POM, black | DIN 562, M2.5, St, nickel-plated |
| | Width HP | 1 piece (SPQ 5)[1] | 1 piece (SPQ 5)[1] | PU 100 pieces | 1 piece (SPQ 10)[1] | PU 100 pieces | PU 100 pieces |
| | | **3 / 6 U Height** | | | | | |
| 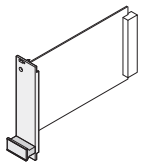 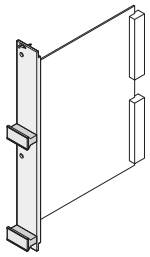 04608128 04608129 | 3 | 20809-396 | 20809-294 | | 20809-281 | | |
| | 4 | 20809-397 | 20809-295 | | 20809-282 | | |
| | 5 | 20808-080 | 20808-003 | | 20809-283 | | |
| | 6 | 20808-081 | 20808-060 | | 20809-284 | | |
| | 7 | 20808-082 | 20808-061 | | 20809-285 | | |
| | 8 | 20808-083 | 20808-062 | | 20809-286 | | |
| | 9 | 20808-084 | 20808-063 | | 20809-287 | | |
| | 10 | 20808-085 | 20808-004 | 21101-239 | 20809-288 | – | – |
| | 12 | 20808-086 | 20808-064 | | 20809-289 | | |
| | 14 | 20808-087 | 20808-065 | | 20809-290 | | |
| | 21 | 20808-088 | 20808-066 | | 20809-291 | | |
| | 28 | 20808-089 | 20808-067 | | 20809-292 | | |
| | 40 | 20808-090 | 20808-009 | | – | | |
| | 42 | 20808-091 | 20808-068 | | 20809-293 | | |
| | 61 | 20808-092 | 20808-012 | | – | | |
| | 1000 mm | – | – | – | 30809-428 | 21100-476 | 21100-359 |
| Fixing material see page | | 7.57 Item 15, 16, 17 | | | | | |
| Dimensions see page | | 7.57 | 7.57 | | 7.59 | 7.59 | 7.59 |

1) SPQ (standard pack quantity): Part number includes 1 piece, but delivery is exclusively made in standard pack quantity (SPQ); lease order at least the SPQ quantity or a multiple

Part no. includes one packing unit (PU); delivery is exclusively made in PU

## Individual components — PCB bracket for static trapeziform handle

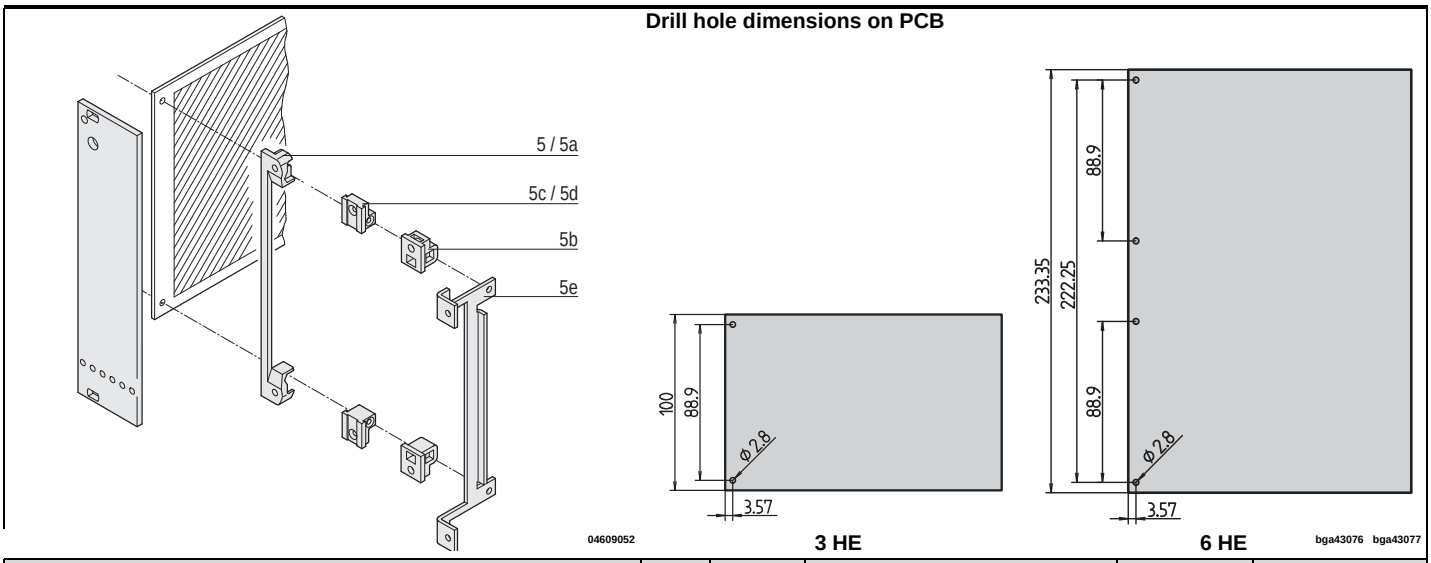


| | Item | | Required Qty 3 U | Required Qty 6 U | Qty/PU | Part no. |
|---|---|---|---|---|---|---|
| **PCB bracket**<br>4 clearance holes for front panel/PCB fixing,<br>4 recesses for hexagon nuts; PBT, UL 94 V-0, red | 5 | 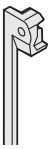 | 1 | 2 | 1 piece (SPQ 10)[1)] | 60807-011 |
| **PCB bracket**<br>4 threads M2.5 for front panel/PCB fixing,<br>PBT, UL 94 V-0, grey, 1 piece | 5a | 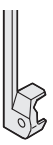 | 1 | 2 | 1 piece (SPQ 10)[1)] | 60807-211 |
| **PCB bracket**<br>Clearance hole for front panel fixing, with recess for hexagon nut, drill hole for self-tapping screw for PCB fixing,<br>PBT, UL 94 V-0, grey, 1 piece | 5b |  | 2 | 4 | 1 piece (SPQ 10)[1)] | 60807-183 |
| **PCB bracket**<br>2 threads M2.5 for front panel/PCB fixing, die-cast zinc, 1 piece | 5c |  | 2 | 4 | 1 piece (SPQ 10)[1)] | 60807-181 |
| **PCB bracket**<br>Thread M2.5 for front panel fixing, clearance hole for PCB fixing, die-cast zinc, 1 piece | 5d |  | 2 | 4 | 1 piece (SPQ 10)[1)] | 60807-203 |
| **PCB bracket**<br>4 M2.5 threads for fixing front panel/PCB for recessed PCB mounting (20 mm), mounting depth 192.24 mm, St, zinc-plated; not for europacPRO, multipacPRO, ratiopacPRO, propacPRO or compacPRO, 1 piece | 5e | 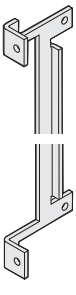 | 1 | 2 | 1 piece (SPQ 10)[1)] | 30808-871 |

1) SPQ (standard pack quantity): Part number includes 1 piece, but delivery is exclusively made in standard pack quantity (SPQ); please order at least the SPQ quantity or a multiple

## Individual components — Fixing material for static trapeziform handle

**3 U**

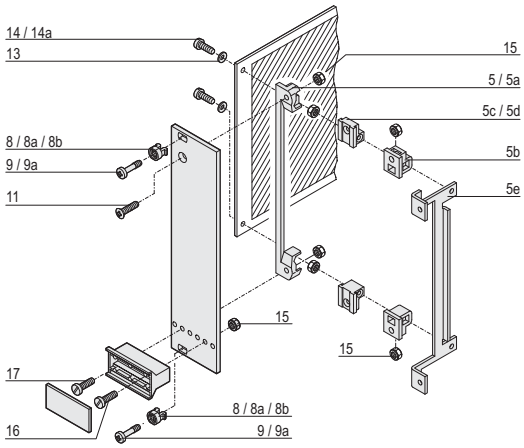


**6 U**

**top**

**bottom**

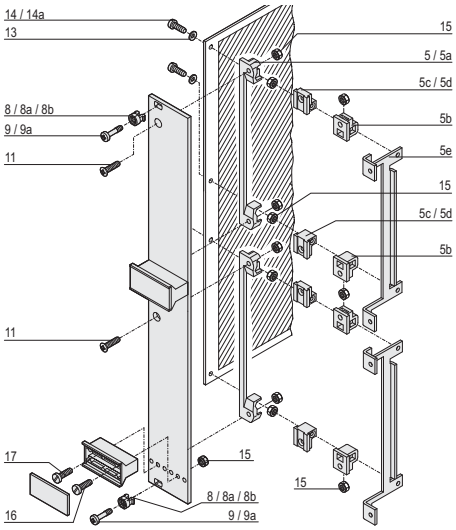


| | Item | | Required Qty 3 U < 8 HP | 3 U ≥ 8 HP | 6 U < 8 HP | 6 U ≥ 8 HP | Qty/PU | Part no. |
|---|---|---|---|---|---|---|---|---|
| Plastic sleeve, for form hole 5.9 x 3.3<br>PA, UL 90 V-2, grey | 8 | aza45933 | 2 | 4 | 2 | 4 | 100 | 21100-464 |
| Metal sleeve, for form hole 5.9 x 3.3, press-in<br>Stainless steal | 8 | aza45934 | 2 | 4 | 2 | 4 | 100 | 21100-662 |
| Metal sleeve, for form hole 5.9 x 3.3, to press-in<br>Nickel-plated brass | 8a | aza45934 | 2 | 4 | 2 | 4 | 100 | 21100-660 |
| Pozidrive/slotted collar screw<br>M2.5 × 11, St, nickel-plated<br>not for europacPRO and cases AZA4658 | 9 | AZA46586 | 2 | 4 | 2 | 4 | 100 | 21100-748 |
| Pozidrive/slotted collar screw<br>M2.5 × 12.3, St, nickel-plated AZA4658 | 9a | AZA46586 | 2 | 4 | 2 | 4 | 100 | 21101-101 |
| Raised Pozidrive countersunk screw<br>M2.5 × 8, St, nickel-plated | 11 | 06702056 | 1 | 1 | 2 | 2 | 100 | 21100-429 |
| Washer<br>2.7 DIN 125, St, nickel-plated, 100 pieces | 13 | AZA46586 | 2 | 2 | 4 | 4 | 100 | 21100-721 |
| Pozidrive panhead screw<br>M2.5 × 8, nickel-plated steel<br>if using item 13 | 14 | 06702057 | 2 | 2 | 4 | 4 | 100 | 21101-069 |
| Panhead screw, self-tapping<br>2.5 x 8, St, zinc-plated<br>for items 5 and 5b | 14a | 06702057 | 1 | 1 | – | – | 100 | 21100-710 |
| Hexagon nut<br>M2.5, nickel-plated steel<br>for items 5 and 5b — 5 / 5b | 15 | aza43239 | 4 / 2 | 4 / 2 | 8 / 4 | 8 / 4 | 100 | 21100-144 |
| Pozidrive panhead screw<br>M2.5 × 12, nickel-plated steel | 16 | 06702057 | 1 | 1 | 2 | 2 | 100 | 21101-221 |
| Pozidrive panhead screw<br>M2.5 × 16, nickel-plated steel | 17 | 06702057 | 1 | 1 | 2 | 2 | 100 | 21101-222 |

1) SPQ (standard pack quantity): Part number includes 1 piece, but delivery is exclusively made in standard pack quantity (SPQ); please order at least the SPQ quantity or a multiple

# Plug-in units – for IEC 60297, trapeziform

## Dimensions Front panels, U profile, shieldable for static trapeziform handle

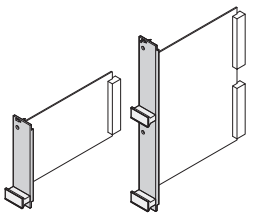

04608126 04608127

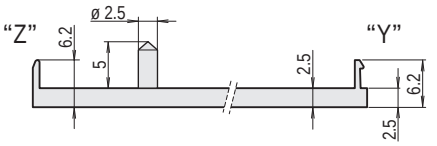


04608111

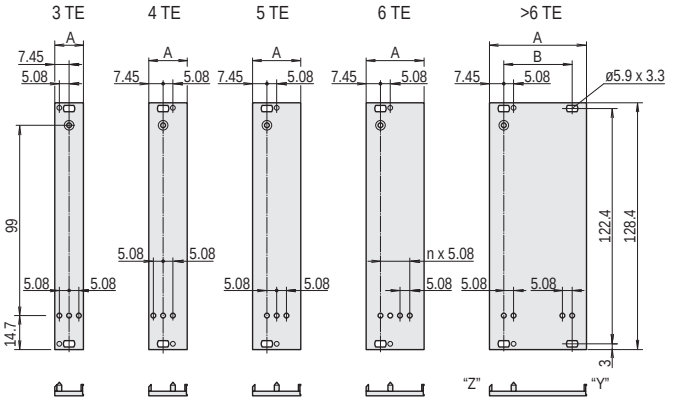


04603064

3 U

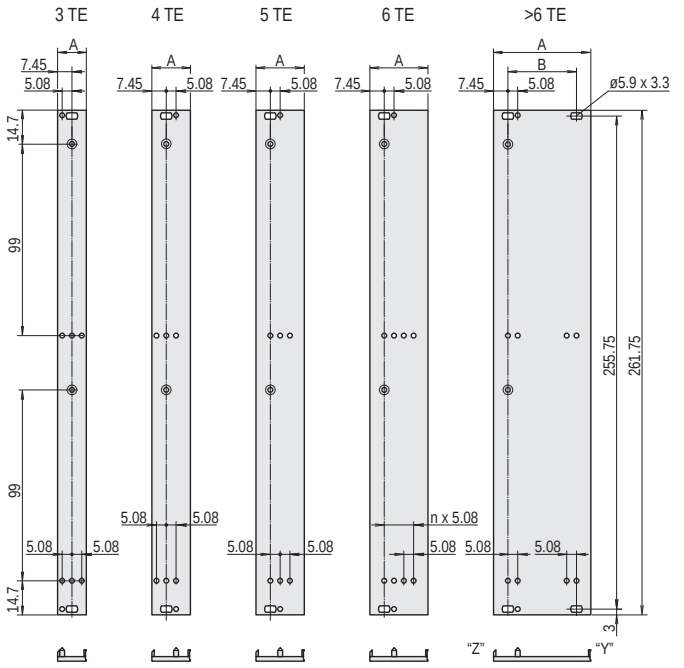


04608110

6 U

### Dimensions table

| Width HP | A mm | B mm |
|---|---|---|
| 3 | 14.90 | - |
| 4 | 19.98 | - |
| 5 | 25.06 | - |
| 6 | 30.14 | - |
| 7 | 35.22 | - |
| 8 | 40.30 | 25.40 |
| 10 | 50.46 | 35.56 |
| 12 | 60.62 | 45.72 |

## Dimensions Front panels for static trapeziform handle

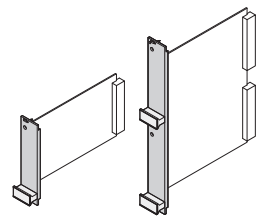

04608126 04608127

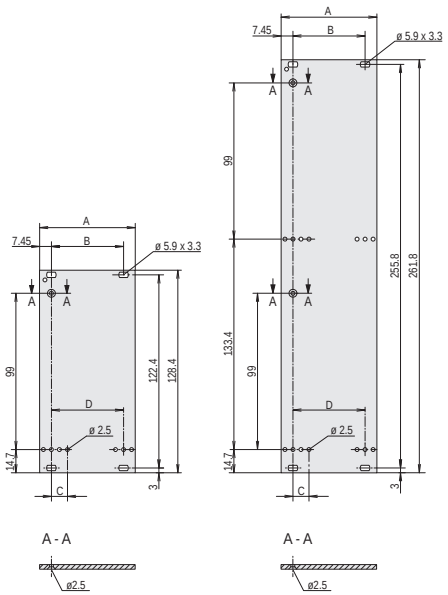


04603053

3 U 6 U

### Dimensions table

| Width HP | A mm | B mm | C mm | D mm |
|---|---|---|---|---|
| 3 | 14.90 | - | - | - |
| 4 | 19.98 | - | - | - |
| 5 | 25.06 | - | 10.16 | - |
| 6 | 30.14 | - | - | 15.24 |
| 7 | 35.22 | - | - | 20.32 |
| 8 | 40.30 | 25.40 | - | 25.40 |
| 10 | 50.46 | 35.56 | - | 35.56 |
| 12 | 60.62 | 45.72 | - | 45.72 |



Part number in bold face type: ready for despatch within 2 working days
Part number in normal type: ready for despatch within 10 working days

# Plug-in units – for IEC 60297, trapeziform

## Dimensions Static plastic handles, trapeziform

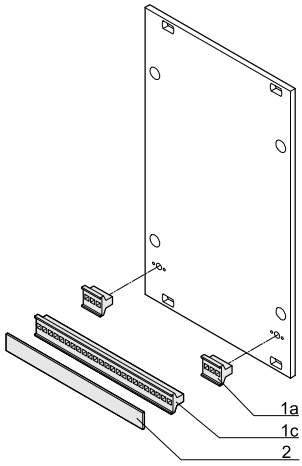


BGA46447

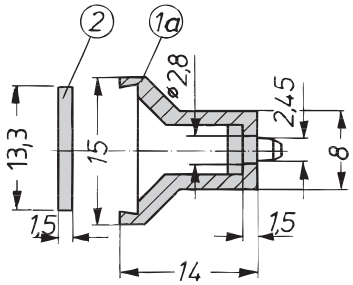


A4--328a

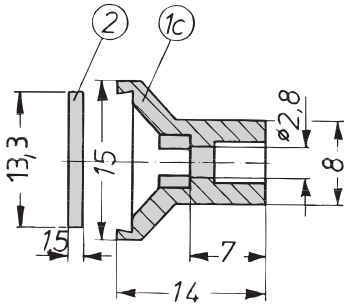


A4--328c

**Dimensions table**

| Item | Width | Width |
|---|---|---|
| | HP | mm |
| 1a | 3 | 13.8 |
| 1a | 4 | 18.9 |
| 1c | 5 | 24.0 |
| 1c | 6 | 29.0 |
| 1c | 7 | 34.1 |
| 1c | 8 | 39.2 |
| 1c | 9 | 44.3 |
| 1c | 10 | 49.4 |
| 1c | 12 | 59.6 |
| 1c | 14 | 69.7 |
| 1c | 21 | 105.2 |
| 1c | 28 | 140.8 |
| 1c | 40 | 201.8 |
| 1c | 42 | 212.0 |
| 1c | 61 | 308.5 |

## Dimensions Aluminium extrusion handles

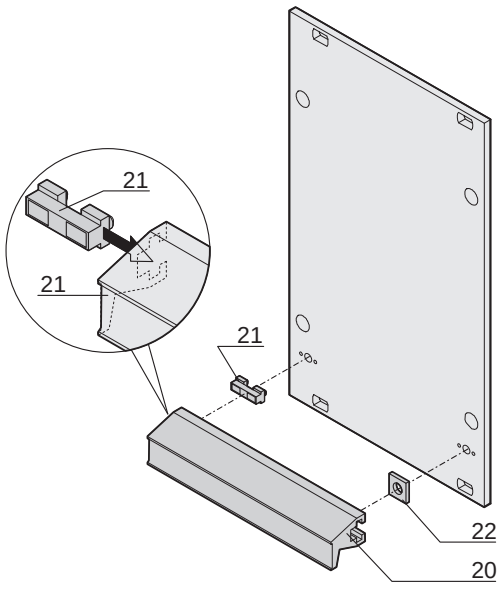


04602069

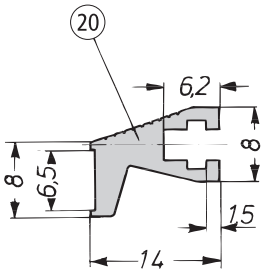


A4-328d

**Dimensions table**

| Item | Width | Width |
|---|---|---|
| 20 | HP | mm |
| 20 | 3 | 13.8 |
| 20 | 4 | 18.9 |
| 20 | 5 | 24.0 |
| 20 | 6 | 29.0 |
| 20 | 7 | 34.1 |
| 20 | 8 | 39.2 |
| 20 | 9 | 44.3 |
| 20 | 10 | 49.4 |
| 20 | 12 | 59.6 |
| 20 | 14 | 69.7 |
| 20 | 21 | 105.2 |
| 20 | 28 | 140.8 |
| 20 | 40 | 201.8 |
| 20 | 42 | 212.0 |
| 20 | - | 1000 |

# Plug-in units – with mechanical shielding

## Plug-in unit with mechanical shielding, 3 U kits



04694001

- Mechanical protection of sub-assembly
- Earthing of shielding panels possible by Faston connectors 6.3 × 0.6 mm
- For euroboards 100 × 160 mm

Handles without extraction function



04692003

Handles with extraction function



04692005

## 3 U kit, shielding component side, handles with/without extraction function

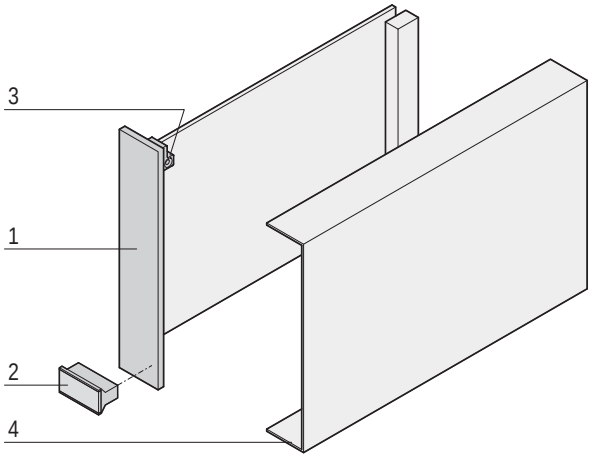


04602077

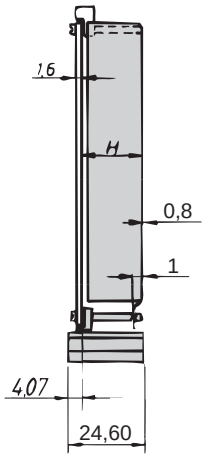


a4-237

- Usable connectors in accordance with EN 60603 (DIN 41612): Construction type B, C, D, F, H, R;

### Delivery comprises (kit)

| Item | Qty | Description |
|---|---|---|
| 1 | 1 | Front panel, Al, 2.5 mm, front: anodised, rear: irisdescent green chromated |
| 2 | 1 | Trapeziform handle, PPE, UL 94 V-1, grey |
| 3 | 1 | Board support, PBT, UL 94 V-0, red |
| 5 | 1 | Assembly kit (also for shielding panels) |

### Order Information

| Width | H | Plug-in unit without extractionfunction | Plug-in unit with extractionfunction |
|---|---|---|---|
| HP | mm | Part no. | Part no. |
| 6 | 24.60 | 20809-502 | 20809-516 |
| **Item 4** Shielding panel component side for 7 HP front panel width, stainless steel, 0.8 mm, 1 piece | | 20809-371 | 20809-371 |

### Note

- Keying/coding with separate keying/coding strip is not possible
- Please order shielding plates separately

**For further information www.schroff.biz/oneclick**
oneClick search code = Part no.

## 3 U kits, both sides shielded (solder/component side), handles with/without extraction function

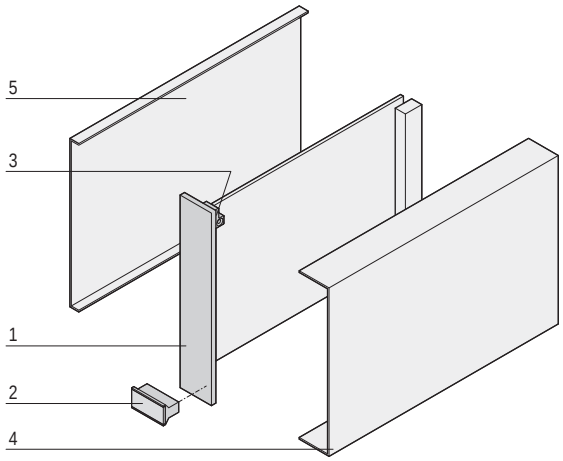


04602078

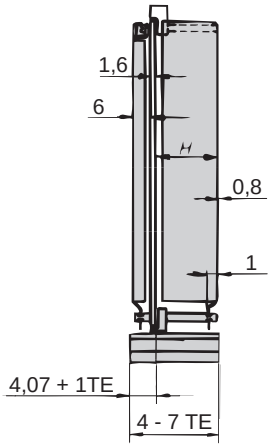


a4-236a

- Usable connectors in accordance with EN 60603 (DIN 41612): Construction type B, C, D, F, H, R;

### Delivery comprises

| Item | Qty | Description |
|---|---|---|
| 1 | 1 | Front panel, Al, 2.5 mm, front: anodised, rear: irisdescent green chromated |
| 2 | 1 | Trapeziform handle, without extraction function, PPE, UL 94 V-1, grey |
| 3 | 2 | Board support, PBT, UL 94 V-0, red |
| 6 | 1 | Assembly kit (also for shielding panels) |

### Order Information

| Width | H | Plug-in unit without extraction function | Plug-in unit with extraction function |
|---|---|---|---|
| HP | mm | Part no. | Part no. |
| 4 | 9.60 | 20809-495 | – |
| 5 | 14.70 | 20809-496 | 20809-511 |
| 6 | 19.80 | 20809-497 | 20809-512 |
| 7 | 24.90 | 20809-498 | 20809-513 |
| **Item 4** Shielding panel component side for 4 HP front panel width, stainless steel, 0.8 mm, 1 piece | | 20809-329 | 20809-329 |
| **Item 4** Shielding panel component side or 5 HP front panel width, stainless steel, 0.8 mm, 1 piece | | 20809-357 | 20809-357 |
| **Item 4** Shielding panel component side for 6 HP front panel width, stainless steel, 0.8 mm, 1 piece | | 20809-359 | 20809-359 |
| **Item 4** Shielding panel component side for 7 HP front panel width, stainless steel, 0.8 mm, 1 piece | | 20809-371 | 20809-371 |
| **Item 5** Shielding panel on solder side, stainless steel, 0.8 mm, 1 piece | | 30809-571 | 30809-571 |

### Note

- Keying/coding with separate keying/coding strip is not possible
- Where the shielding plate is used for the solder side, the PCB is offset to the right by 1 HP

**For further information www.schroff.biz/oneclick**
oneClick search code = Part no.

## PCB cover for euroboards

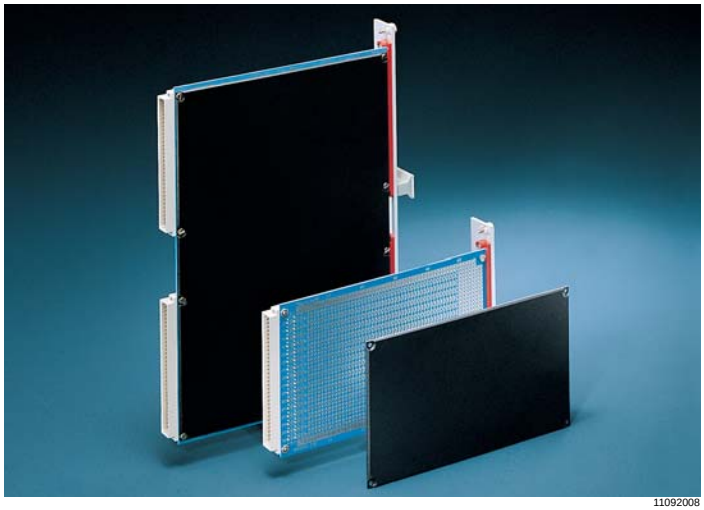

11092008

- Mechanical protection of the solder side

### Order Information

| Description | Qty | Part no. |
|---|---|---|
| PCB cover (thickness 0.9 mm) for euroboards (100 x 160 mm), PBT, black, max. operating temperature without permanent deformation 55 °C | 1 piece (SPQ 10) | 61000-007 |
| PCB cover (thickness 0.9 mm) with similar temperature expansion coefficients to FR4 PCB; for euroboards (100 x 160 mm), LCP, UL 94 V-0, white, max. operating temperature without permanent deformation 85 °C | 1 piece (SPQ 10) | 61000-177 |
| PCB cover for double euroboards (233.35 x 160 mm), PP, UL 94 V-0, black | 1 piece (SPQ 10) | 61000-012 |
| **Slotted flathead screw** M2.5 × 6, height of head 1.2 mm, PU 100 pieces | | 21102-007 |
| **Slotted flathead screw** M2.5 × 12, height of head 1.2 mm, PU 100 pieces | | 21102-008 |

SPQ (standard pack quantity): Part number includes 1 piece, but delivery is exclusively made in standard pack quantity: please order at least 10 pieses of PCB covers or a multiple

**For further information www.schroff.biz/oneclick**
oneClick search code = Part no.

For PCBs 100 × 160 mm

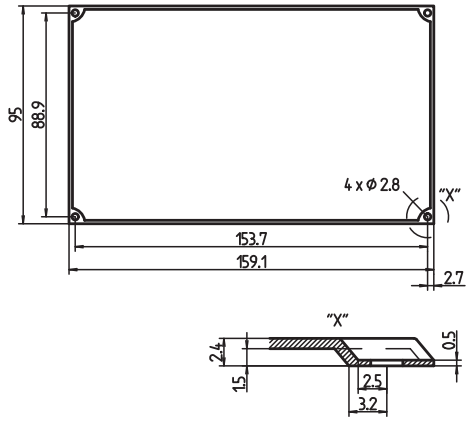


LKA40520

For PCBs 233.35 × 160 mm

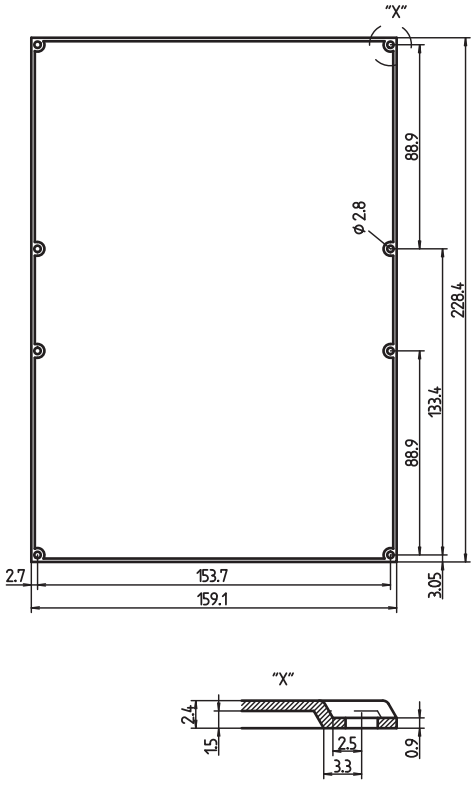


LKA30451



Part number in bold face type: ready for despatch within 2 working days
Part number in normal type: ready for despatch within 10 working days

## PCB cover for CompactPCI

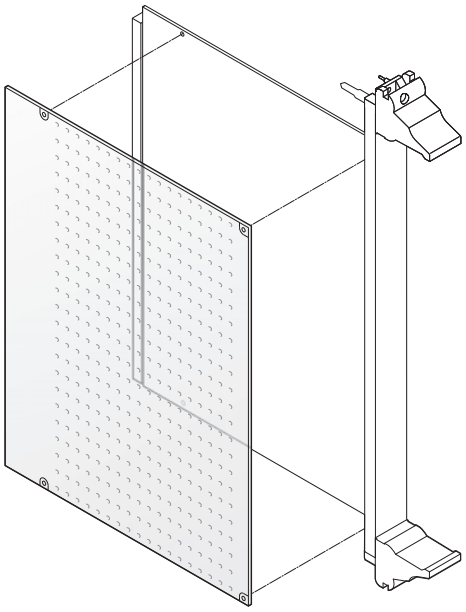

12303051

- Mechanical protection of solder side
- Cover is perforated for better cooling of components

### Delivery comprises

| Item | Qty | Description |
|---|---|---|
| 1 | 1 | Cover, plastic, 0.5 mm, antistatic, perforated,<br>UL 94 V-0;<br>max. operating temperature 65 °C,<br>max. continuous operating temperature 55 °C |

### Order Information

| Height<br>U | Depth<br>mm | Part no. |
|---|---|---|
| 6 | 80 | 24579-039 |
| 3 | 160 | 24579-037 |
| 6 | 160 | 24579-038 |
| **Fixing clips** PU 100 pieces | | 21101-914 |

### Note

- Fixing clips are required for mounting the perforated covers; please order separately

**For further information www.schroff.biz/oneclick**
oneClick search code = Part no.

Overview . . . . . 0
Cabinets . . . . . 1
Wall mounted cases . . . . . 2
Accessories for cabinets and wall mounted cases 3
Climate control 4
Desk-top cases 5
Subracks/ 19" chassis . . . 6
Front panels, plug-in units . . 7
Systems . . . . . 8
Power supply units . . . . . 9
Backplanes . . 10
Connectors, front panel component system . . . . . 11
Appendix . . . . 12

# Frame type plug-in units

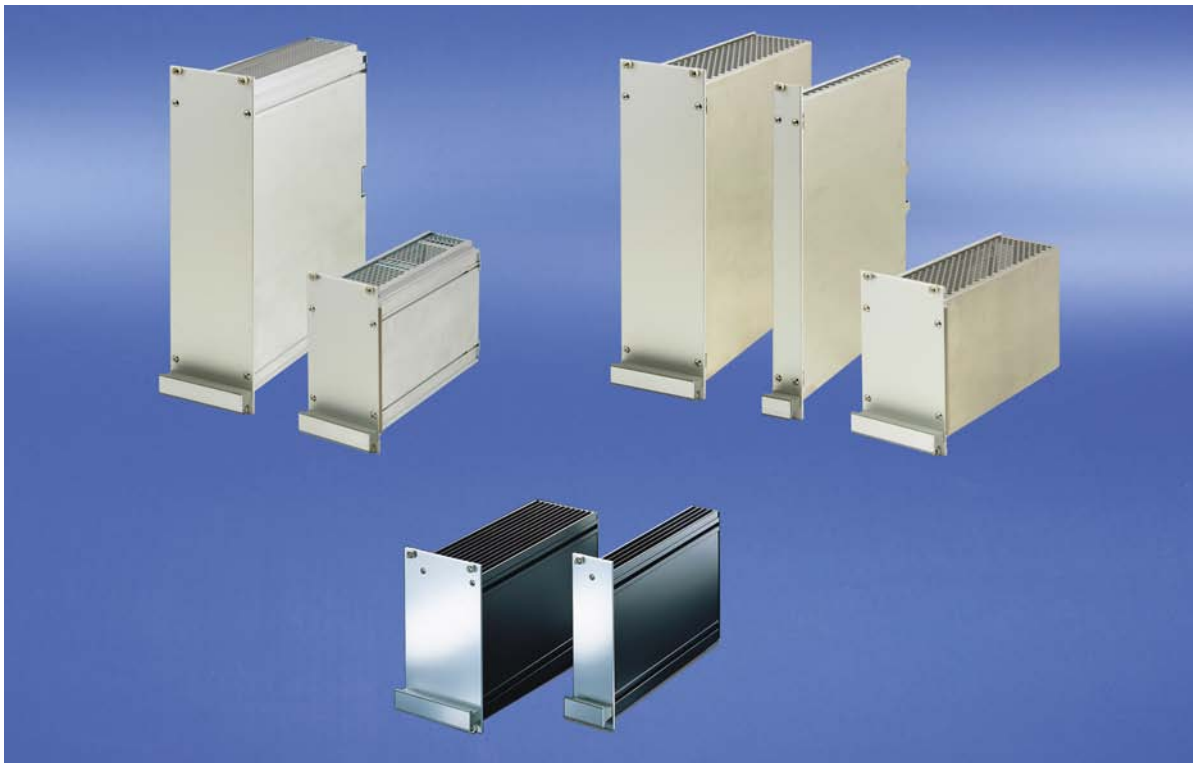

04807002

**19" modules are mechanical components that serve to carry one or more circuit boards. The boards housed in a module are thus combined into a larger electronic function unit that is self-contained and testable. Mechanical dimensions conform to IEC 60297-3-101 / IEEE 1101.1/11 standards, i.e. the so-called 19" standard. These function units are integrated into the subrack or case; their dimensions likewise form a component of IEC 60297-3-101 / IEEE 1101.1/11.**

**The dimension obligations of the standard give only little freedom for individual design of frame type plug-in units. The aim is therefore to make optimum use of what freedoms regarding dimensions it does allow, e.g.**

- **to maximise the internal space of a plug-in unit and thus create maximum space for electronic components, or**
- **to ensure optimal EMC shielding with minimum loss of mounting space to the shielding components**

## Standards

- IEC 60297-3-101 / IEEE 1101.1/11

## Product selection kits

| Width | 5 HP | | 6 HP | | 7 HP | | 8 HP | | 10 HP | | 12 HP | | 14 HP | | 21 HP | | 28 HP | | 42 HP | |
|---|---|---|---|---|---|---|---|---|---|---|---|---|---|---|---|---|---|---|---|---|
| Height in U | 3 | 6 | 3 | 6 | 3 | 6 | 3 | 6 | 3 | 6 | 3 | 6 | 3 | 6 | 3 | 6 | 3 | 6 | 3 | 6 |
| Frame-type plug-in units PRO | – | – | – | – | – | – | x | x | x | x | x | x | x | x | x | x | x | x | x | x |
| Frame type plug-in units PRO with cooling fins | – | – | – | – | – | – | – | – | – | – | x | x | x | x | x | x | – | – | – | – |
| Frame-type plug-in units PRO with hood | x | x | x | x | x | x | – | – | x | x | x | x | x | x | – | – | – | – | – | – |
| HF frame-type plug-in units | – | – | – | – | x | – | – | – | x | – | x | – | x | – | x | – | x | – | – | – |

**Downloads and further important information can be found on the Internet under www.schroff.biz**

# Frame-type plug-in units to house printed boards

- **For PCBs in euroboard format**
- **Kits or configuration from single components**
- **Front panels: unshielded or EMC shielded**



04808008

## Frame-type plug-in units PRO

- Kit or configuration from single components in 3 U and 6 U, 8 ... 42 HP
- Shielded and unshielded versions
- Side panel with/without cooling fins
- For one or several PCBs or one or several connectors
- Various possibilities for combining the individual components



04808009

## Plug-in units PRO with hood

- Kit in 3 U and 6 U, 5 ... 14 HP
- Shielded and unshielded versions
- For one PCB with one connector

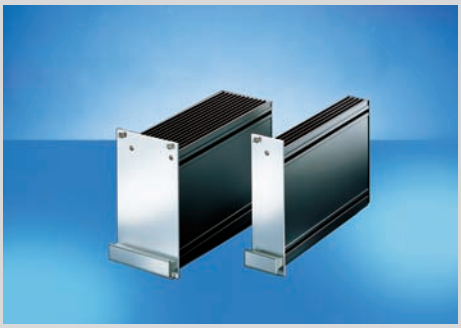

04892005

## HF frame-type plug-in units

- Kit or configuration from single components in 3 U, 7 ... 28 HP
- For shielding against high-frequency radiation
- Tube with cooling fins, in extruded aluminium
- For one or more PCBs, one or more connectors




30407004

## ServicePLUS from page 7.74

**e.g. individual configuration and assembly**
**e.g. modification (special colours)**
**e.g. customised solutions with modified frame-type plug-in units (special sizes)**

**www.schroff.biz/ServicePLUS**

FRONT PANEL EXPRESS

**Overview .... 7.64**

**Introduction: Product features, product comparison ... 7.66**

**Frame type plug-in units PRO**

**Frame type plug-in units PRO, shielded/ unshielded ..... 7.68**

**ServicePLUS ... 7.74**

**ServicePLUS configuration ... 7.75**

**Frame-type plug-in units PRO with hood, unshielded ..... 7.86**

**HF plug-in units**

**Kits 3 U ..... 7.90**

**ServicePLUS configuration ... 7.91**

**Accessories for plug-in units see page ..... 7.52**

# Frame type plug-in units PRO – Introduction

## The new generation

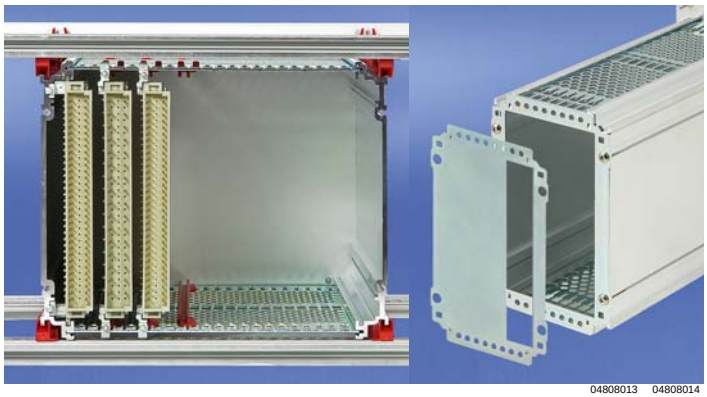

04808013 04808014

Rear view: frame type plug-in unit mounted in subrack

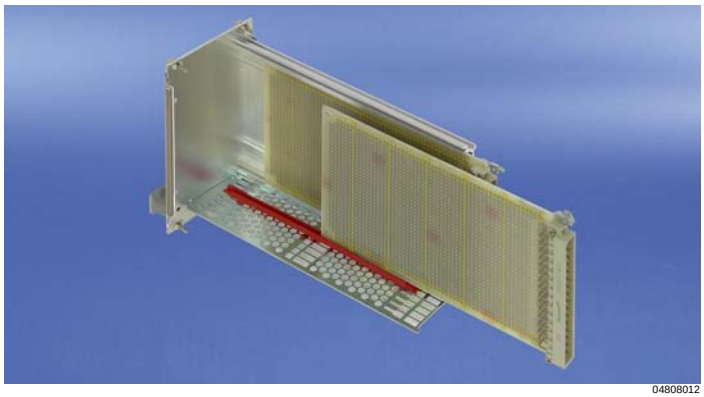

04808012

Board for slot 1 fixes to the side panel; further boards are fixed with guide rails



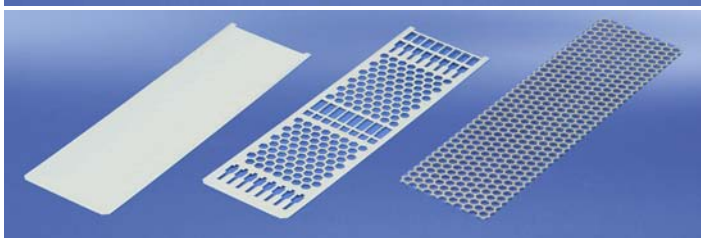

04808011 04808016

Sliding cover plates

The frame type plug-in units conform to IEC 60297-3-101. They serve to house standardized PCBs and bulky components. Because of the standardized assembly dimensions the frame type plug-in units can be mounted on guide rails, to be pushed into the subrack, in any order and using any plug-in unit.
The robust Al extrusion construction is especially suited for heavy components and the rough handling as "Field Replaceable Unit".

### Details

The EMC version of the front panel was improved for frequencies over 1 GHz by using a conductive textile gasket and a robust U-shaped front panel

Push-in cover plates for quick fitting

Handles to be bolted-on from the front, easy mounting

Optimised air flow rate thanks to slender extruded side panels and large perforation areas in the cover plates, a perforation degree of up to 65 % is possible

3 cover plate versions (solid, perforated, perforated for guide rail mounting)

Width of frame-type plug-in units from 8 HP

To achieve a higher airflow rate, exceptionally slender guide rails are used to fix the boards

From slot 2 guide rails can be positioned in HP grid

Easy fixing of the boards in the frame-type plug-in units;
only 2 x 1 screws per board are needed to fix the boards

3 rear panel variants (solid, for one DIN connector, for multiple DIN connectors)

The flat rear panel enables simple reworking (e.g. punching);
the rear panel can be removed without removing the PCBs

For better EMC contacting between rear panel and cover plate and to increase the stability of broad frame-type plug-in units, a rear panel retainer is available

Use of Torx screws for secure machine mounting

**Note:**
Frame type plug-in units cannot be combined with guide rails for CompactPCI or VME64x applications (width 4 HP)

# Frame type plug-in units PRO – Introduction

## Comparison:
## Frame-type plug-in units PRO/Frame-type plug-in units PRO with hood

**Frame-type plug-in units PRO**

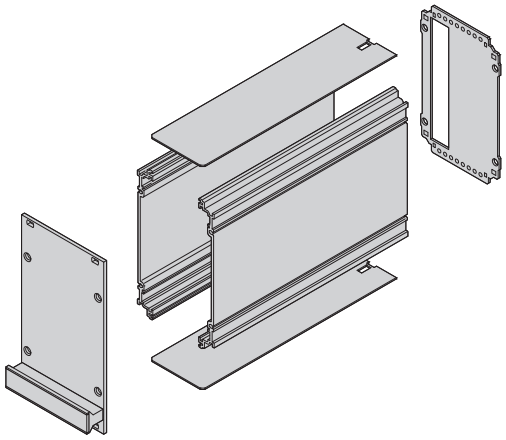

04808125

**Frame-type plug-in units PRO with hood (shielded)**

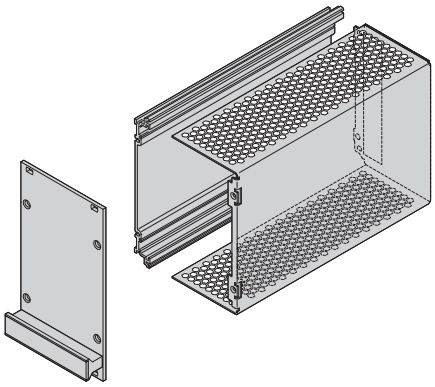

04808115

| Frame-type plug-in units PRO | Frame-type plug-in units PRO with hood (shielded) |
|---|---|
| For one or multiple PCBs | Only for one PCB |
| Modular, at least 6 components<br>(front panel, 2 side panels, 2 cover plates, rear panel) | Only 3 components<br>(front panel, left hand side panel, hood with integrated rear panel) |
| Identical front panel and front handle | Identical front panel and front handle |
| Identical left hand side panel (Al extrusion) | Identical left hand side panel (Al extrusion) |
| Side panel on right hand side (Al extrusion) | Hood on right hand side (Al sheet) |
| Separate rear panel | Hood includes rear panel |
| Widths from 8 HP to 42 HP | Widths from 5 HP to 14 HP |
| Guiding in subrack/case with 4 guide rails;<br>left and right side panels | Guiding in subrack/case with 2 guide rails;<br>left side panel |
| 3 rear panel variants (for one DIN connector, for multiple DIN connectors, rear panel without cut-out) | 1 rear panel variant (for one DIN connector) |

## Frame type plug-in units PRO, 3 U kits, front panel shielded (textile gasket)


04811007

Illustration shows 12 HP width, side panel depth 167 mm

ServicePLUS see page 7.74

- Extruded side panels with groove to rigth and left, to insert a PCB (board position in accordance with standard in left side panel only)
- 2 board depths: 160 mm and 220 mm
- 2 cover plate versions
  – with perforation, for guide rails (5a, airflow rate approx. 60 %); please order guide rails separately
  – Without perforation (5b)
- 2 rear panel versions
  – With cut-out for one connector (3a, in accordance with EN 60603-2, DIN 41612)
  – With cut-out for multiple connectors (3b, in accordance with EN 60603-2, DIN 41612)

### Delivery comprises (Kit)

| Item | Qty | Description |
|---|---|---|
| 1 | 1 | Front panel, U profile anodised, rear conductive, alignment pin pressed-in |
| 2 | 1 | Handle, grey, PPE, UL 94 V-1 |
| 3a | 1 | Rear panel, St, zinc-plated, 1.5 mm, with cut-out for one connector, incl. PCB fixing (slot 1) |
| 3b | 1 | Rear panel, St, zinc-plated, 1.5 mm, with cut-out for multiple connectors, incl. PCB fixing (slot 1 and slot 2), incl. 2 guide rails |
| 3c | 2 | rear panel fastener |
| 4 | 2 | Side panel, Al extrusion, colourless passivated, with groove for one PCB |
| 5a | 2 | Cover plate, St, zinc-plated, 1.0 mm, with perforation |
| 5b | 2 | Cover plate, St, zinc-plated, 1.0 mm, without perforation |
| 6 | 1 | EMC sealing (textile) |
| 7 | 1 | Assembly kit |

### Order Information

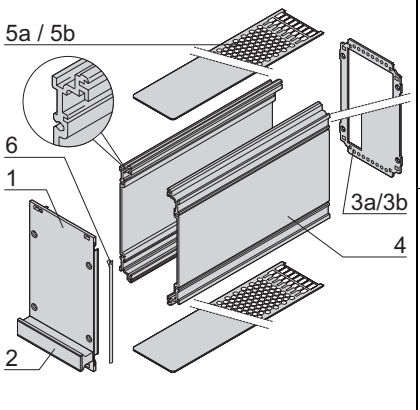

04808050

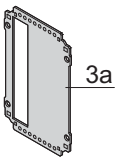

04808052

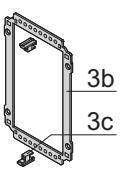

04808053

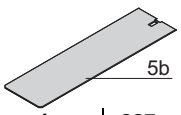

04808055

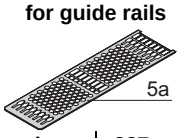

04808054

| Rear panel U | Rear panel HP | Height / Width | Cover plate without perforation, 167 mm deep, Part no. | Cover plate without perforation, 227 mm deep, Part no. | Cover plate with perforation, for guide rails, 167 mm deep, Part no. | Cover plate with perforation, for guide rails, 227 mm deep, Part no. |
|---|---|---|---|---|---|---|
| 3 | 8 | | 24813-408 | 24813-458 | 24813-208 | 24813-258 |
| 3 | 10 | | 24813-410 | 24813-460 | 24813-210 | 24813-260 |
| 3 | 12 | | 24813-412 | 24813-462 | 24813-212 | 24813-262 |
| 3 | 14 | | 24813-414 | 24813-464 | 24813-214 | 24813-264 |
| 3 | 21 | | 24813-421 | 24813-471 | 24813-221 | 24813-271 |
| 3 | 28 | | 24813-428 | 24813-478 | 24813-228 | 24813-278 |
| 3 | 42 | | 24813-442 | 24813-492 | 24813-242 | 24813-292 |
| 3 | 8 | | – | – | 24813-308 | 24813-358 |
| 3 | 10 | | – | – | 24813-310 | 24813-360 |
| 3 | 12 | | – | – | 24813-312 | 24813-362 |
| 3 | 14 | | – | – | 24813-314 | 24813-364 |
| 3 | 21 | | – | – | 24813-321 | 24813-371 |
| 3 | 28 | | – | – | 24813-328 | 24813-378 |
| 3 | 42 | | – | – | 24813-342 | 24813-392 |

- Description of individual components, guide rails, dimension drawings, other combinations cover plates/rear panels etc. see from page 7.75



Part number in bold face type: ready for despatch within 2 working days
Part number in normal type: ready for despatch within 10 working days

## Frame type plug-in units PRO, 6 U kits, front panel shielded (textile gasket)




Illustration shows 12 HP width, side panel depth 167 mm

ServicePLUS see page 7.74

- Extruded side panels with groove to rigth and left, to insert a PCB (board position in accordance with standard in left side panel only)
- 2 board depths: 160 mm and 220 mm
- 2 cover plate versions
  - With perforation, for guide rails (5a, airflow rate approx. 60 %),
  - please order guide rails separately
  - Without perforation (5b)
- 2 rear panel versions
  - With cut-out for one connector (3a; in accordance with EN 60603-2, DIN 41612)
  - With cut-out for multiple connectors (3b; in accordance with EN 60603-2, DIN 41612)
  - 6 U has cut-outs for connectors at top and bottom

### Delivery comprises (Kit)

| Item | Qty | Description |
|---|---|---|
| 1 | 1 | Front panel, U profile anodised, rear conductive, alignment pin pressed-in |
| 2 | 1 | Handle, grey, PPE, UL 94 V-1 |
| 3a | 1 | Rear panel, St, zinc-plated, 1.5 mm, with cut-out for one connector, incl. PCB fixing (slot 1) |
| 3b | 1 | Rear panel, St, zinc-plated, 1.5 mm, with cut-out for multiple connectors, incl. PCB fixing (slot 1 and slot 2), incl. 2 guide rails |
| 3c | 2 | rear panel fastener |
| 4 | 2 | Side panel, Al extrusion, colourless passivated, with groove for one PCB |
| 5a | 2 | Cover plate, St, zinc-plated, 1.0 mm, with perforation |
| 5b | 2 | Cover plate, St, zinc-plated, 1.0 mm, without perforation |
| 6 | 1 | EMC sealing (textile) |
| 7 | 1 | Assembly kit |

### Order Information

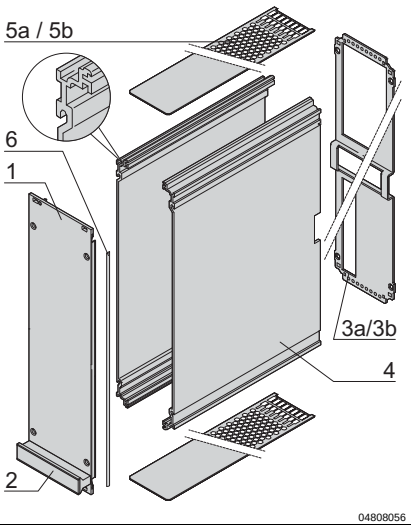


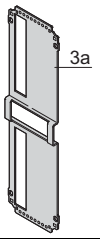


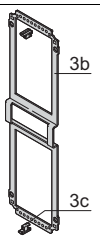


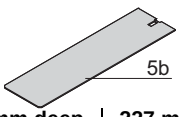


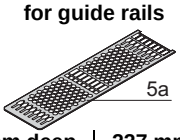


| Rear panel | Height | Width | Cover plate without perforation | | Cover plate with perforation, for guide rails | |
|---|---|---|---|---|---|---|
| | | | 167 mm deep | 227 mm deep | 167 mm deep | 227 mm deep |
| | U | HP | Part no. | Part no. | Part no. | Part no. |
| 3a | 6 | 8 | 24813-908 | 24813-958 | 24813-708 | 24813-758 |
| | 6 | 10 | 24813-910 | 24813-960 | 24813-710 | 24813-760 |
| | 6 | 12 | 24813-912 | 24813-962 | 24813-712 | 24813-762 |
| | 6 | 14 | 24813-914 | 24813-964 | 24813-714 | 24813-764 |
| | 6 | 21 | 24813-921 | 24813-971 | 24813-721 | 24813-771 |
| | 6 | 28 | 24813-928 | 24813-978 | 24813-728 | 24813-778 |
| | 6 | 42 | 24813-942 | 24813-992 | 24813-742 | 24813-792 |
| 3b | 6 | 8 | – | – | 24813-808 | 24813-858 |
| | 6 | 10 | – | – | 24813-810 | 24813-860 |
| | 6 | 12 | – | – | 24813-812 | 24813-862 |
| | 6 | 14 | – | – | 24813-814 | 24813-864 |
| | 6 | 21 | – | – | 24813-821 | 24813-871 |
| | 6 | 28 | – | – | 24813-828 | 24813-878 |
| 3c | 6 | 42 | – | – | 24813-842 | 24813-892 |

- Description of individual components, guide rails, dimension drawings, other combinations cover plates/rear panels etc. see from page 7.75

## Frame-type plug-in units PRO, 3 U kits, front panel unshielded




Illustration shows 12 HP width, side panel depth 167 mm

ServicePLUS see page 7.74

- Extruded side panels with groove to rigth and left, to insert a PCB (board position in accordance with standard in left side panel only)
- 2 board depths: 160 mm and 220 mm
- 2 cover plate versions
  – with perforation, for guide rails (5a, airflow approx. 60 %); please order guide rails separately
  – Without perforation (5b)
- 2 rear panel versions
  – With cut-out for one connector (3a, in accordance with EN 60603-2, DIN 41612)
  – With cut-out for multiple connectors (3b, in accordance with EN 60603-2, DIN 41612)

### Delivery comprises (Kit)

| Item | Qty | Description |
|---|---|---|
| 1 | 1 | Front panel, Al, 2.5 mm, anodised, cut edges plain |
| 2 | 1 | Handle, grey, PPE, UL 94 V-1 |
| 3a | 1 | Rear panel, St, zinc-plated, 1.5 mm, with cut-out for one connector, incl. PCB fixing (slot 1) |
| 3b | 1 | Rear panel, St, zinc-plated, 1.5 mm, with cut-out for multiple connectors, incl. PCB fixing (slot 1 and slot 2), incl. 2 guide rails |
| 3c | 2 | rear panel fastener |
| 4 | 2 | Side panel, Al extrusion, colourless passivated, with groove for one PCB |
| 5a | 2 | Cover plate, St, zinc-plated, 1.0 mm, with perforation |
| 5b | 2 | Cover plate, St, zinc-plated, 1.0 mm, without perforation |
| 6 | 1 | Assembly kit |

### Order Information

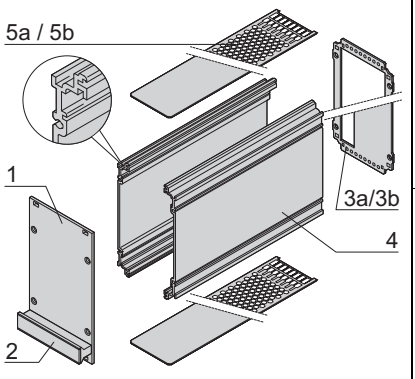


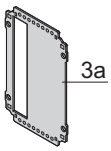


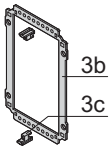


| Rear panel | Height U | Width HP | Cover plate without perforation, 167 mm deep Part no. | Cover plate without perforation, 227 mm deep Part no. | Cover plate with perforation, for guide rails, 167 mm deep Part no. | Cover plate with perforation, for guide rails, 227 mm deep Part no. |
|---|---|---|---|---|---|---|
| | 3 | 8 | 24812-408 | 24812-458 | 24812-208 | 24812-258 |
| | 3 | 10 | 24812-410 | 24812-460 | 24812-210 | 24812-260 |
| | 3 | 12 | 24812-412 | 24812-462 | 24812-212 | 24812-262 |
| | 3 | 14 | 24812-414 | 24812-464 | 24812-214 | 24812-264 |
| | 3 | 21 | 24812-421 | 24812-471 | 24812-221 | 24812-271 |
| | 3 | 28 | 24812-428 | 24812-478 | 24812-228 | 24812-278 |
| | 3 | 42 | 24812-442 | 24812-492 | 24812-242 | 24812-292 |
| | 3 | 8 | – | – | 24812-308 | 24812-358 |
| | 3 | 10 | – | – | 24812-310 | 24812-360 |
| | 3 | 12 | – | – | 24812-312 | 24812-362 |
| | 3 | 14 | – | – | 24812-314 | 24812-364 |
| | 3 | 21 | – | – | 24812-321 | 24812-371 |
| | 3 | 28 | – | – | 24812-328 | 24812-378 |
| | 3 | 42 | – | – | 24812-342 | 24812-392 |

- Description of individual components, guide rails, dimension drawings, other combinations cover plates/rear panels etc. see from page 7.75



Part number in bold face type: ready for despatch within 2 working days
Part number in normal type: ready for despatch within 10 working days

## Frame type plug-in units PRO, 6 U kits, front panel unshielded




Illustration shows 12 HP width, side panel depth 167 mm

ServicePLUS see page 7.74

- Extruded side panels with groove to rigth and left, to insert a PCB (board position in accordance with standard in left side panel only)
- 2 board depths: 160 mm and 220 mm
- 2 cover plate versions
  - with perforation, for guide rails (5a, airflow approx. 60 %); please order guide rails separately
  - Without perforation (5b)
- 2 rear panel versions
  - With cut-out for one connector (3a; in accordance with EN 60603-2, DIN 41612)
  - With cut-out for multiple connectors (3b; in accordance with EN 60603-2, DIN 41612)
  - 6 U has cut-outs for connectors at top and bottom

### Delivery comprises (Kit)

| Item | Qty | Description |
|---|---|---|
| 1 | 1 | Front panel, Al, 2.5 mm, anodised, cut edges plain |
| 2 | 1 | Handle, grey, PPE, UL 94 V-1 |
| 3a | 1 | Rear panel, St, zinc-plated, 1.5 mm, with cut-out for one connector, incl. PCB fixing (slot 1) |
| 3b | 1 | Rear panel, St, zinc-plated, 1.5 mm, with cut-out for multiple connectors, incl. PCB fixing (slot 1 and slot 2), incl. 2 guide rails |
| 3c | 2 | rear panel fastener |
| 4 | 2 | Side panel, Al extrusion, colourless passivated, with groove for one PCB |
| 5a | 2 | Cover plate, St, zinc-plated, 1.0 mm, with perforation |
| 5b | 2 | Cover plate, St, zinc-plated, 1.0 mm, without perforation |
| 6 | 1 | Assembly kit |

### Order Information

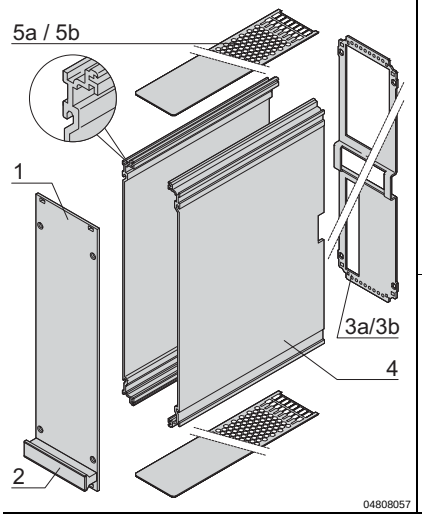


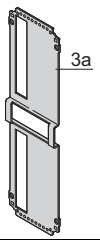


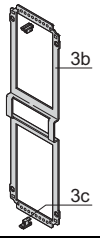


| Rear panel | Height | Width | Cover plate without perforation | | Cover plate with perforation, for guide rails | |
|---|---|---|---|---|---|---|
| | | | 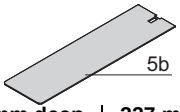  | | 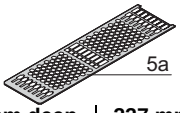  | |
| | U | HP | 167 mm deep Part no. | 227 mm deep Part no. | 167 mm deep Part no. | 227 mm deep Part no. |
| 3a | 6 | 8 | 24812-908 | 24812-958 | 24812-708 | 24812-758 |
| | 6 | 10 | 24812-910 | 24812-960 | 24812-710 | 24812-760 |
| | 6 | 12 | 24812-912 | 24812-962 | 24812-712 | 24812-762 |
| | 6 | 14 | 24812-914 | 24812-964 | 24812-714 | 24812-764 |
| | 6 | 21 | 24812-921 | 24812-971 | 24812-721 | 24812-771 |
| | 6 | 28 | 24812-928 | 24812-978 | 24812-728 | 24812-778 |
| | 6 | 42 | 24812-942 | 24812-992 | 24812-742 | 24812-792 |
| 3b | 6 | 8 | – | – | 24812-808 | 24812-858 |
| | 6 | 10 | – | – | 24812-810 | 24812-860 |
| | 6 | 12 | – | – | 24812-812 | 24812-862 |
| | 6 | 14 | – | – | 24812-814 | 24812-864 |
| | 6 | 21 | – | – | 24812-821 | 24812-871 |
| | 6 | 28 | – | – | 24812-828 | 24812-878 |
| 3c | 6 | 42 | – | – | 24812-842 | 24812-892 |

- Description of individual components, guide rails, dimension drawings, other combinations cover plates/rear panels etc. see from page 7.75

## Frame type plug-in unit PRO kits, side panel with cooling fins, front panel shielded



04812018

Illustration shows 12 HP width, side panel depth 167 mm

- Right side panel with cooling fins to improve heat dissipation; left side panel extrusion with groove to insert a PCB (board position in accordance with standard in left side panel only)
- 2 board depths: 160 mm and 220 mm
- Cover plate without perforation
- With cut-out for one connector in accordance with EN 60603-2, DIN 41612
- With 10 W installed heat dissipation loss the internal temperature falls by approx. 5°C

NEW

### Delivery comprises (Kit)

| Item | Qty | Description |
|---|---|---|
| 1 | 1 | Front panel, U profile anodised, rear conductive, alignment pin pressed-in |
| 2 | 1 | Handle, grey, PPE, UL 94 V-1 |
| 3 | 1 | Rear panel, St, zinc-plated, 1.5 mm, with cut-out for one connector, incl. PCB fixing (slot) |
| 4a | 2 | Side panel, left, Al extrusion, clear passivated, with groove for one PCB |
| 4b | 2 | Side panel, right, Al extrusion, clear passivated, with cooling fins |
| 5 | 2 | Cover plate, St, zinc-plated, 1.0 mm |
| 6 | 1 | EMC sealing (textile) |
| 7 | 1 | Assembly kit |

ServicePLUS see page 7.74

### Order Information

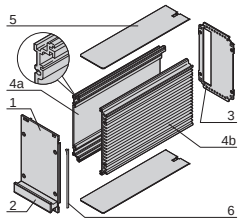


04812058

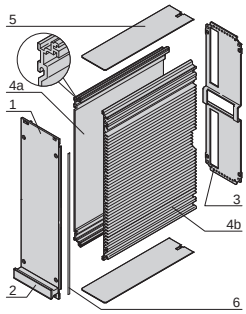


04812060

| Height U | Width HP | Depth = 167 mm Part no. | Depth = 227 mm Part no. |
|---|---|---|---|
| 3 | 14 | 24813-164 | – |
| 3 | 21 | 24813-171 | – |
| 6 | 14 | 24813-664 | 24813-614 |
| 6 | 21 | 24813-671 | 24813-621 |

### Note

- Description of individual components, guide rails, dimension drawings, other combinations cover plates/rear panels etc. see from page 7.75



Part number in bold face type: ready for despatch within 2 working days
Part number in normal type: ready for despatch within 10 working days

## Frame type plug-in units PRO kits, side panel with cooling fins, front panel unshielded



04812008

Illustration shows 12 HP width, side panel depth 167 mm

- Right side panel with cooling fins to improve heat dissipation; left side panel extrusion with groove for insertion of a PCB (board position in accordance with standard in left side panel only)
- 2 board depths: 160 mm and 220 mm
- Cover plate without perforation
- With cut-out for one connector in accordance with EN 60603-2, DIN 41612
- With 10 W installed heat dissipation loss the internal temperature falls by approx. 5°C

NEW

### Delivery comprises (Kit)

| Item | Qty | Description |
|---|---|---|
| 1 | 1 | Front panel, Al, 2.5 mm, anodised, cut edges plain |
| 2 | 1 | Handle, grey, PPE, UL 94 V--1 |
| 3 | 1 | Rear panel, St, zinc-plated, 1.5 mm, with cut-out for one connector, incl. PCB fixing (slot 1) |
| 4a | 2 | Side panel, left, Al extrusion, clear passivated, with groove for one PCB |
| 4b | 2 | Side panel, right, Al extrusion, clear passivated, with cooling fins |
| 5 | 2 | Cover plate, St, zinc-plated, 1.0 mm |
| 6 | 1 | Assembly kit |

ServicePLUS see page 7.74

### Order Information

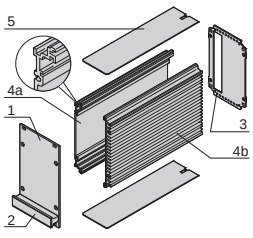


04812059

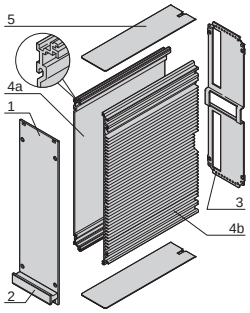


04812061

| Height U | Width HP | Depth = 167 mm Part no. | Depth = 227 mm Part no. |
|---|---|---|---|
| 3 | 12 | 24812-162 | – |
| 3 | 14 | 24812-164 | – |
| 3 | 21 | 24812-171 | – |
| 6 | 12 | 24812-662 | 24812-612 |
| 6 | 14 | 24812-664 | 24812-614 |
| 6 | 21 | 24812-671 | 24812-621 |

### Note

- Description of individual components, guide rails, dimension drawings, other combinations cover plates/rear panels etc. see from page 7.75

# Frame type plug-in units PRO ServicePLUS

## configuration

**Components can be varied and combined freely**

### Simple. Fast. For the product you want.

- Configuration tables for frame type plug-in units PRO from page 7.75
- Configuration tables for HF plug-in units from page 7.90
- Online configuration: **www.schroff.co.uk/configuration**

## assembly

**Fitting of all mechanical, electrical and electronic components by our specialists**

### Assembled by professionals. Double benefit!

- Professional and reliable
- Packaged ready for despatch

## modification

**Custom drillings, cut-outs and special colours for off-the-shelf products**

### Small changes. Large impact.

- Holes, cut-outs, drill holes, individual colour and printing

## solution

**Integration and custom developments**

### Simple. Fast. From one source.

- Special sizes, custom solutions
- Heat dissipation concepts
- EMC solutions

## express

**Delivery time to customer's request**

FRONT PANEL EXPRESS

### When fast has to be faster.

- Delivery time for front panels from 2 working days; for frame-type plug-in units from 5 working days

## academy

**Knowledge transfer and partnership**

### Knowledge. Sharing. Partnerships.

- Downloadable CAD drawings, test reports, user manual

## Individual components — Front panels, front handles

| | Front panel | Shieldable front panel, U profile | | | Trapeziform handle, grey (without extraction function) | |
|---|---|---|---|---|---|---|
| | unshielded | Front panel | Textile EMC gasket | | Grey | Black |
| | 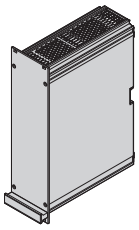 04808124 | 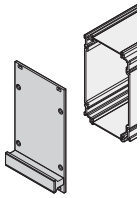 04808060 | 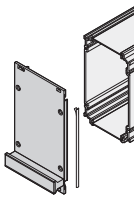 04808061 |  04808062 | 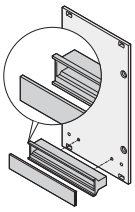 04808063 | |
| **Supplied quantity for assembly of 5 frame type plug-in units** | Al, 2.5 mm, front anodised, rear iridescent green chromated, cut edges blank | Al extrusion, alignment pin pressed-in, front anodised, rear conductive | always fixed laterally on the front panel, in the groove of the profile, textile gasket, core: foam, sleeve: textile cladding with CuNi coating, UL 94 V-0, temperature range -40 ... 70 °C | | handle: PPE, UL 94 V-1; identification plate: Al, 1.5 mm, anodised, cut edges plain; please order clip separately (included in mounting kit for five plug-in units or individual parts) 7.78 | |
| | **1 piece (SPQ 5)[1)]** | **1 piece (SPQ 5)[1)]** | **PU 10 pieces** | **PU 100 pieces** | **1 piece (SPQ 5)[1)]** | **1 piece (SPQ 5)[1)]** |
| Width | **3 U Height** | | | | | |
| HP | PCB depth 160 mm | | | | | |
| 8 | 34812-108 | 34813-108 | 21101-853 | 21101-854 | 20808-062 | 20808-083 |
| 10 | 34812-110 | 34813-110 | | | 20808-004 | 20808-085 |
| 12 | 34812-112 | 34813-112 | | | 20808-064 | 20808-086 |
| 14 | 34812-114 | 34813-114 | | | 20808-065 | 20808-087 |
| 21 | 34812-121 | 34813-121 | | | 20808-066 | 20808-088 |
| 28 | 34812-128 | 34813-128 | | | 20808-067 | 20808-089 |
| 42 | 34812-142 | 34813-142 | | | 20808-068 | 20808-091 |
| | PCB depth 220 mm | | | | | |
| 8 | 34812-108 | 34813-108 | 21101-853 | 21101-854 | 20808-062 | 20808-083 |
| 10 | 34812-110 | 34813-110 | | | 20808-004 | 20808-085 |
| 12 | 34812-112 | 34813-112 | | | 20808-064 | 20808-086 |
| 14 | 34812-114 | 34813-114 | | | 20808-065 | 20808-087 |
| 21 | 34812-121 | 34813-121 | | | 20808-066 | 20808-088 |
| 28 | 34812-128 | 34813-128 | | | 20808-067 | 20808-089 |
| 42 | 34812-142 | 34813-142 | | | 20808-068 | 20808-091 |
| Width | **6 U Height** | | | | | |
| HP | PCB depth 160 mm | | | | | |
| 8 | 34812-608 | 34813-608 | 21101-855 | 21101-856 | 20808-062 | 20808-083 |
| 10 | 34812-610 | 34813-610 | | | 20808-004 | 20808-085 |
| 12 | 34812-612 | 34813-612 | | | 20808-064 | 20808-086 |
| 14 | 34812-614 | 34813-614 | | | 20808-065 | 20808-087 |
| 21 | 34812-621 | 34813-621 | | | 20808-066 | 20808-088 |
| 28 | 34812-628 | 34813-628 | | | 20808-067 | 20808-089 |
| 42 | 34812-642 | 34813-642 | | | 20808-068 | 20808-091 |
| | PCB depth 220 mm | | | | | |
| 8 | 34812-608 | 34813-608 | 21101-855 | 21101-856 | 20808-062 | 20808-083 |
| 10 | 34812-610 | 34813-610 | | | 20808-004 | 20808-085 |
| 12 | 34812-612 | 34813-612 | | | 20808-064 | 20808-086 |
| 14 | 34812-614 | 34813-614 | | | 20808-065 | 20808-087 |
| 21 | 34812-621 | 34813-621 | | | 20808-066 | 20808-088 |
| 28 | 34812-628 | 34813-628 | | | 20808-067 | 20808-089 |
| 42 | 34812-642 | 34813-642 | | | 20808-068 | 20808-091 |
| Dimensions see page | 7.82 | 7.82 | | | 7.82 | 7.82 |

1) SPQ (standard pack quantity): Part number includes 1 piece, but delivery is exclusively made in standard pack quantity (SPQ); please order at least the SPQ quantity or a multiple

Part no. includes one packing unit (PU); delivery is exclusively made in PU

## Individual components — Side panels, cover plates, guide rails

| | Extruded side panel | | Extruded side panel with cooling fins | | Side panel, corner profile and side plate | | Cover plate | |
|---|---|---|---|---|---|---|---|---|
| | Left | Right | Left | Right | Corner profile | Side plate | Without perforation | With perforation |
| | 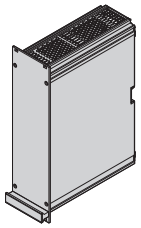 04808124 | 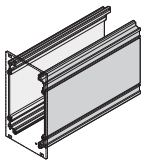 04808065 | 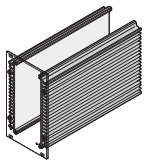 04811050 | | 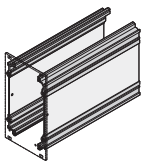 04808066 | 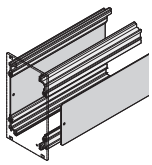 04808067 | 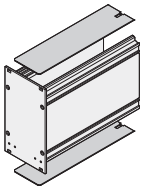 04808068 | 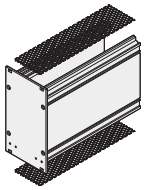 04808070 |
| **Supplied quantity for assembly of 5 frame type plug-in units** | Al extrusion, colourless passivated, with groove for one PCB; 3 U symmetrical; 6 U asymmetrical, right and left side panel different)<br>Side panels with and without cooling fins can be combined | | Al extrusion, colourless passivated, with groove for one PCB; 3 U symmetrical; 6 U asymmetrical<br>Side panels with and without cooling fins can be combined | | Al extrusion, colourless passivated, with groove for one PCB, please order side plate separately | St, 1 mm, zinc-plated, is inserted into side panel rear angle | St, 1.0 mm, zinc-plated; PCB only possible in slot 1 | St, 1.2 mm, Al, airflow rate in perforated area approx. 65 %; PCB only possible in slot 1 |
| | **1 piece (SPQ 10)[1)]** | **1 piece (SPQ 10)[1)]** | **1 piece (SPQ 10)[1)]** | **1 piece (SPQ 10)[1)]** | **1 piece (SPQ 10)[1)]** | **1 piece (SPQ 5)[1)]** | **1 piece (SPQ 10)[1)]** | **1 piece (SPQ 10)[1)]** |
| Width | **3 U Height** | | | | | | | |
| HP | PCB depth 160 mm | | | | | | | |
| 8 | 34812-100 1 piece (SPQ 10)[1)] | 34812-100 1 piece (SPQ 10)[1)] | 34812-200 | 34812-200 | 34812-102 | 34812-103 | 34812-408 | 34812-958 |
| 10 | | | | | | | 34812-410 | 34812-960 |
| 12 | | | | | | | 34812-412 | 34812-962 |
| 14 | | | | | | | 34812-414 | 34812-964 |
| 21 | | | | | | | 34812-421 | 34812-971 |
| 28 | | | | | | | 34812-428 | 34812-978 |
| 42 | | | | | | | 34812-442 | 34812-992 |
| | PCB depth 220 mm | | | | | | | |
| 8 | 34813-100 1 piece (SPQ 10)[1)] | 34813-100 1 piece (SPQ 10)[1)] | 34813-200 | 34813-200 | 34813-102 | 34813-103 | 34813-408 | 34813-958 |
| 10 | | | | | | | 34813-410 | 34813-960 |
| 12 | | | | | | | 34813-412 | 34813-962 |
| 14 | | | | | | | 34813-414 | 34813-964 |
| 21 | | | | | | | 34813-421 | 34813-971 |
| 28 | | | | | | | 34813-428 | 34813-978 |
| 42 | | | | | | | 34813-442 | 34813-992 |
| Width | **6 U Height** | | | | | | | |
| HP | PCB depth 160 mm | | | | | | | |
| 8 | 34812-600 1 piece (SPQ 5)[1)] | 34812-601 1 piece (SPQ 5)[1)] | – | 34812-701 | 34812-102 | 34812-603 | 34812-408 | 34812-958 |
| 10 | | | | | | | 34812-410 | 34812-960 |
| 12 | | | | | | | 34812-412 | 34812-962 |
| 14 | | | | | | | 34812-414 | 34812-964 |
| 21 | | | | | | | 34812-421 | 34812-971 |
| 28 | | | | | | | 34812-428 | 34812-978 |
| 42 | | | | | | | 34812-442 | 34812-992 |
| | PCB depth 220 mm | | | | | | | |
| 8 | 34813-600 1 piece (SPQ 5)[1)] | 34813-601 1 piece (SPQ 5)[1)] | – | 34813-701 | 34813-102 | 34813-603 | 34813-408 | 34813-958 |
| 10 | | | | | | | 34813-410 | 34813-960 |
| 12 | | | | | | | 34813-412 | 34813-962 |
| 14 | | | | | | | 34813-414 | 34813-964 |
| 21 | | | | | | | 34813-421 | 34813-971 |
| 28 | | | | | | | 34813-428 | 34813-978 |
| 42 | | | | | | | 34813-442 | 34813-992 |
| Dimensions see page | 7.80 | 7.80 | 7.80 | 7.80 | 7.81 | 7.81 | 7.84 | 7.84 |

1) SPQ (standard pack quantity): Part number includes 1 piece, but delivery is exclusively made in standard pack quantity (SPQ); please order at least the SPQ quantity or a multiple

## Individual components — Rear panels, assembly material

| | With perforation for guide rails | | Rear panel | | | Rear panel fastener | Assembly kit |
|---|---|---|---|---|---|---|---|
| | Cover plate | Guide rail | Without cut-out | Cut-out for one connector | Cut-out for multiple connectors | for connection of rear panel with cover plate | |
| | 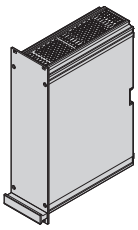 04808124 | 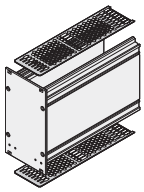 04808069 |  04808074 | 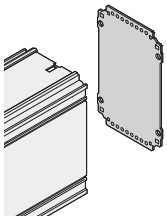 04808073 | 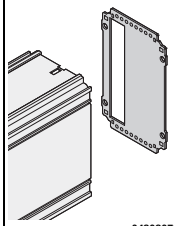 04808071 | 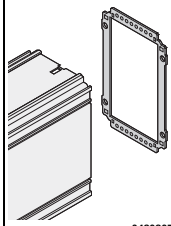 04808072 | 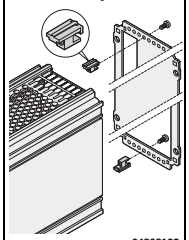 04808123 | for mounting five 3 U or 6 U frame type plug-in units from ServicePLUS components: front panel, rear panel, side panel, cover plate and handle, description see page 7.78 |
| **Supplied quantity for assembly of 5 frame type plug-in units** | St, 1.0 mm, zinc-plated; air flow rate in perforated area approx. 60 %; please order snap-in guide rails separately | PBT, UL 94 V-0, red, groove width 2 mm, PCB fixing required from slot 2, see page 7.79 | St, 1.5 mm, zinc-plated | St, 1.5 mm, zinc-plated | St, 1.5 mm, zinc-plated, for EN 60603 (DIN 41612) connectors, types: B, C, D, F, H, Q, R, S | 10 rear panel fasteners, Zn die-cast; 10 fixing screws; not suitable for cover plate with perforation | | |
| | **1 piece (SPQ 10)[1)]** | **PU 10 pieces** | **1 piece (SPQ 5)[1)]** | **1 piece (SPQ 5)[1)]** | **1 piece (SPQ 5)[1)]** | **PU 1 kit** | **PU 1 kit** | |
| Width | **3 U Height** | | | | | | | |
| HP | PCB depth 160 mm | | | | | | | |
| 8 | 34812-908 | 24812-101 | 34813-208 | 34812-208 | 34812-308 | 24812-401 | 24812-100 | |
| 10 | 34812-910 | | 34813-210 | 34812-210 | 34812-310 | | | |
| 12 | 34812-912 | | 34813-212 | 34812-212 | 34812-312 | | | |
| 14 | 34812-914 | | 34813-214 | 34812-214 | 34812-314 | | | |
| 21 | 34812-921 | | 34813-221 | 34812-221 | 34812-321 | | | |
| 28 | 34812-928 | | 34813-228 | 34812-228 | 34812-328 | | | |
| 42 | 34812-942 | | 34813-242 | 34812-242 | 34812-342 | | | |
| | PCB depth 220 mm | | | | | | | |
| 8 | 34813-908 | 24812-101 | 34813-208 | 34812-208 | 34812-308 | 24812-401 | 24812-100 | |
| 10 | 34813-910 | | 34813-210 | 34812-210 | 34812-310 | | | |
| 12 | 34813-912 | | 34813-212 | 34812-212 | 34812-312 | | | |
| 14 | 34813-914 | | 34813-214 | 34812-214 | 34812-314 | | | |
| 21 | 34813-921 | | 34813-221 | 34812-221 | 34812-321 | | | |
| 28 | 34813-928 | | 34813-228 | 34812-228 | 34812-328 | | | |
| 42 | 34813-942 | | 34813-242 | 34812-242 | 34812-342 | | | |
| Width | **6 U Height** | | | | | | | |
| HP | PCB depth 160 mm | | | | | | | |
| 8 | 34812-908 | 24812-101 | 34813-708 | 34812-708 | 34812-808 | 24812-401 | 24812-100 | |
| 10 | 34812-910 | | 34813-710 | 34812-710 | 34812-810 | | | |
| 12 | 34812-912 | | 34813-712 | 34812-712 | 34812-812 | | | |
| 14 | 34812-914 | | 34813-714 | 34812-714 | 34812-814 | | | |
| 21 | 34812-921 | | 34813-721 | 34812-721 | 34812-821 | | | |
| 28 | 34812-928 | | 34813-728 | 34812-728 | 34812-828 | | | |
| 42 | 34812-942 | | 34813-742 | 34812-742 | 34812-842 | | | |
| | PCB depth 220 mm | | | | | | | |
| 8 | 34813-908 | 24812-101 | 34813-708 | 34812-708 | 34812-808 | 24812-401 | 24812-100 | |
| 10 | 34813-910 | | 34813-710 | 34812-710 | 34812-810 | | | |
| 12 | 34813-912 | | 34813-712 | 34812-712 | 34812-812 | | | |
| 14 | 34813-914 | | 34813-714 | 34812-714 | 34812-814 | | | |
| 21 | 34813-921 | | 34813-721 | 34812-721 | 34812-821 | | | |
| 28 | 34813-928 | | 34813-728 | 34812-728 | 34812-828 | | | |
| 42 | 34813-942 | | 34813-742 | 34812-742 | 34812-842 | | | |
| Dimensions see page | 7.84 | 7.84 | 7.83 | 7.83 | 7.83 | | | |

1) SPQ (standard pack quantity): Part number includes 1 piece, but delivery is exclusively made in standard pack quantity (SPQ); please order at least the SPQ quantity or a multiple
Part no. includes one packing unit (PU); delivery is exclusively made in PU

Individual components

## Fixing material (100 pieces)

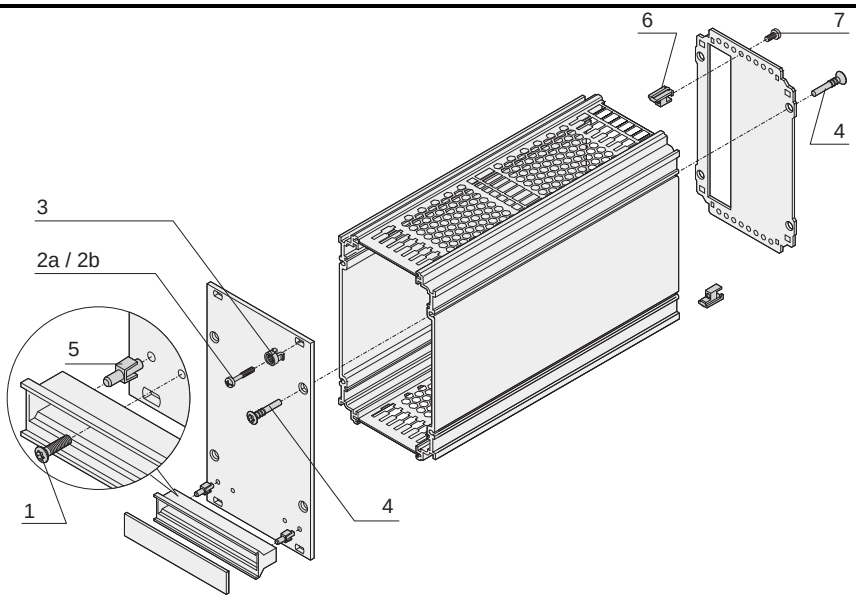


| Fixing parts | Item | | Required quantity per plug-in unit | Description | Qty/PU | Part no. |
|---|---|---|---|---|---|---|
| **Fixing parts for mounting the module in subrack or case** | | | | | | |
| Torx panhead screw, M2.5 x 10, St, zinc-plated, self-forming thread | 1 | aza45940 | 2 | Assembly of handle on front panel | 100 | 24560-179 |
| Pozidrive/slotted collar screw M2.5 × 11, St, nickel-plated | 2a | aza46586 | 4 / 6* 06107050 | Mounting of front panel on horizontal rail with threaded insert pushed in to front | 100 | 21100-748 |
| Pozidrive/slotted collar screw M2.5 × 12.3, St, nickel-plated | 2b | aza46586 | 4 / 6* 06107051 | Front panel is fitted to horizontal rail with threaded insert pushed in to rear in the standard position | 100 | 21101-101 |
| Plastic sleeves for form hole 5.9 x 3.3, PA, UL 94 V-2, grey | 3 | aza45933 | 4 / 6* | Is needed to fix collar screws | 100 | 21100-464 |
| **Fixing parts for mounting the module** | | | | | | |
| Torx raised countersunk panhead screw 3 x 20, St, nickel-plated | 4 | 06708052 | 8 | Assembly of front panel and rear panel on extruded side panel/rear extrusion of side panel | 100 | 24812-501 |
| Fixing clip for trapeziform plastic handle PPE UL 94 V 0, black | 5 | 04608090 | 2 | Alignment aid for handle on front panel | 100 | 21101-239 |
| Rear panel fastener Zn die-cast | 6 | 04808128 | 2 | To stabilise rear panel with wide frame-type plug-in units | 100 | 24812-402 |
| Torx panhead screw M2.5 × 10, St, nickel-plated | 7 | aza45940 | 2 | To fix rear panel fastener or board fixing | 100 | 24560-148 |
| Board support (slot 1) Zn die-cast | | 04808126 | 2 | Board support (slot 1) see page 7.79 | 50 pairs | 24812-202 |
| Board support (from slot 2) Zn die-cast | | 04808127 | 2 | Board support (from slot 2) see page 7.79 | 50 pairs | 24812-302 |
| Torx panhead screw M2.5 × 6, St, nickel-plated | | aza45940 | 2 | Is needed for board fixing without connector see page 7.79 | 100 | 24560-178 |

* on 42 HP EMC shielded frame type plug-in units

■ Further collar screws and sleeves see page 7.107



Part number in bold face type: ready for despatch within 2 working days
Part number in normal type: ready for despatch within 10 working days

Individual components — Board fixing

| | Board fixing slot 1 | Board fixing from slot 2 | |
|---|---|---|---|
| | 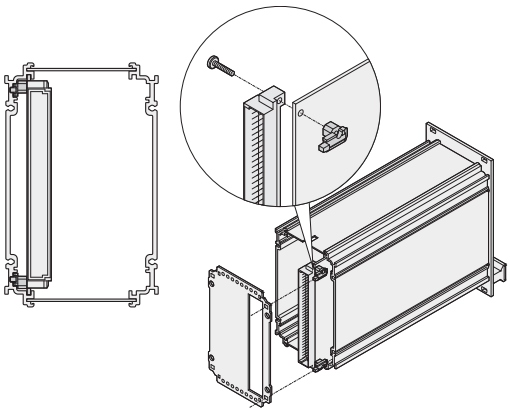 | 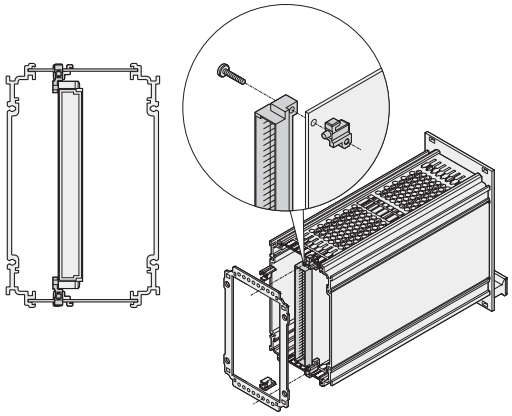 | |
| | 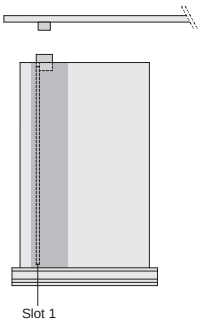 | With connector from slot 2<br>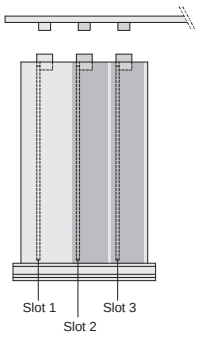 | Without connector from slot 2<br>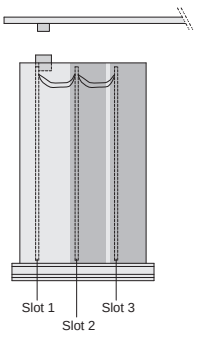 |
| | 04808118 04808109 04808129 | 04808119 04808110 bga42785 kaa46417 | |
| | Zn die-cast, Torx panhead screw M2.5 x 10; PCB is pushed into the guiding groove of the left side panel/ side panel rear angle, is fixed with rear panel | Zn die-cast, Torx panhead screw M2.5 x 10; PCB is pushed into guide rail, is fixed with rear panel | |
| **Height** | **PU 5 pair** | **PU 5 pair** | |
| 3 U | 24812-201 | 24812-301 | |
| 6 U | 24812-201 | 24812-301 | |
| **Assembly kits** | | With connector from slot 2 | Without connector from slot 2 |
| Torx panhead screw, M2.5 x 6, St, nickel-plated, PU 100 pieces; is needed for board fixing without connector |  24560-178<br>aza45940 | – | 24560-178 |
| Connector mounting on PCB, for 6 U frame type plug-in units (centre) Torx panhead screw M2.5 x 10, nut M2.5; PU 10 pieces (screw + nut) | 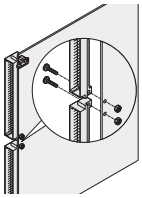 24812-600<br>04808120 | 24812-600 | |

# Frame type plug-in units PRO

## Dimensions Side panel without cooling fins

**3 U**

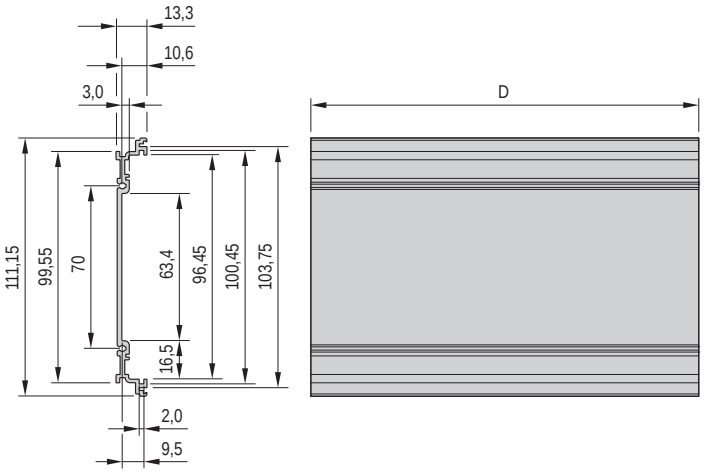


**6 U**

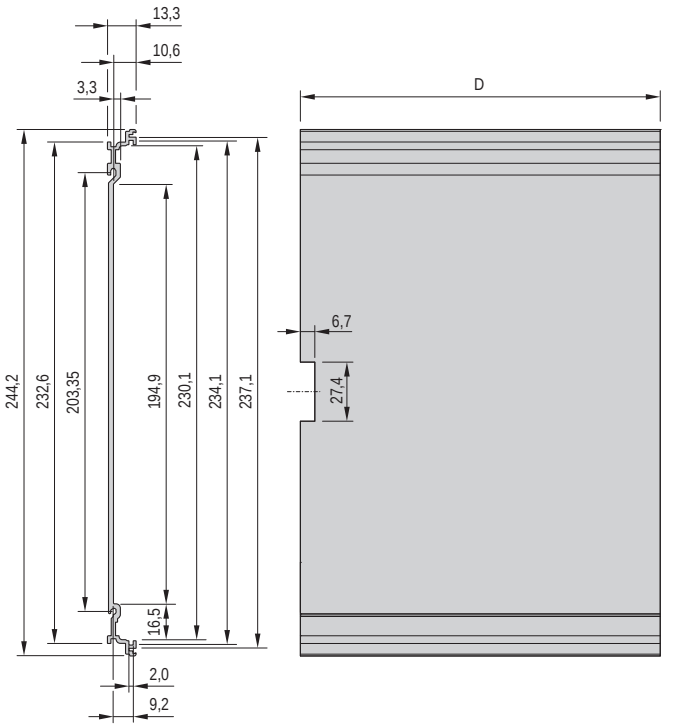


Depth = 167/227 mm

## Dimensions Side panel with cooling fins

**3 U**

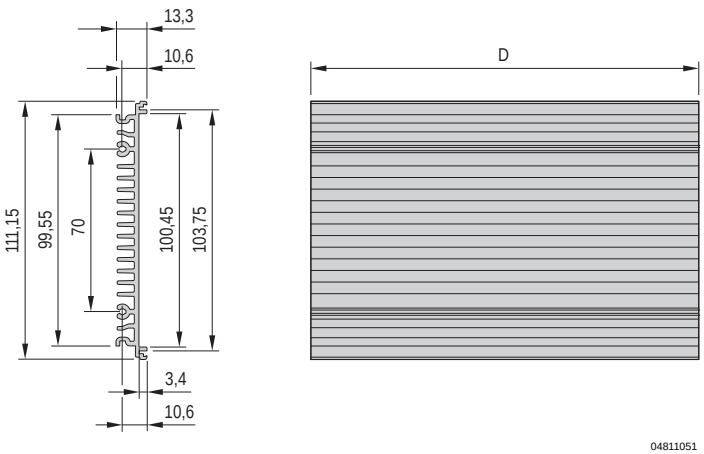


**6 U**

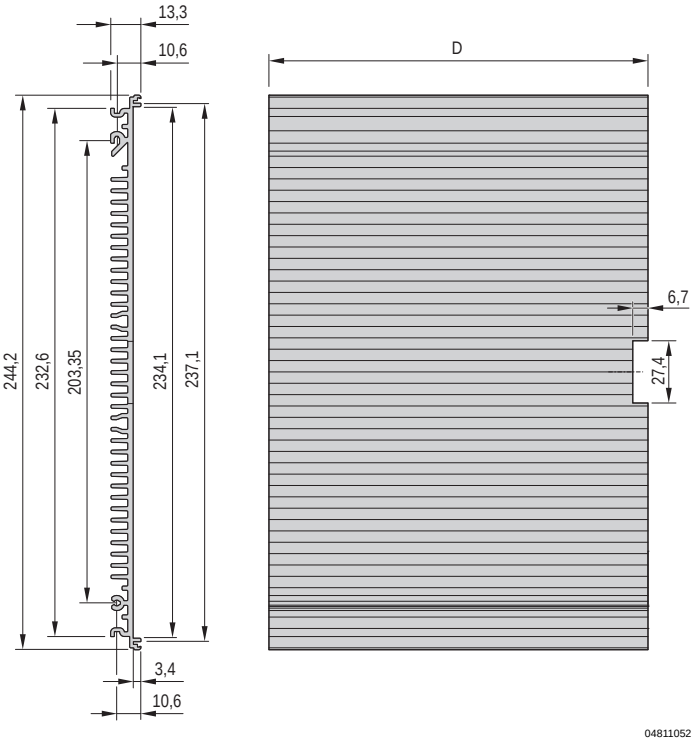


Depth = 167/227 mm



Part number in bold face type: ready for despatch within 2 working days
Part number in normal type: ready for despatch within 10 working days

## Dimensions Side panel rear angle

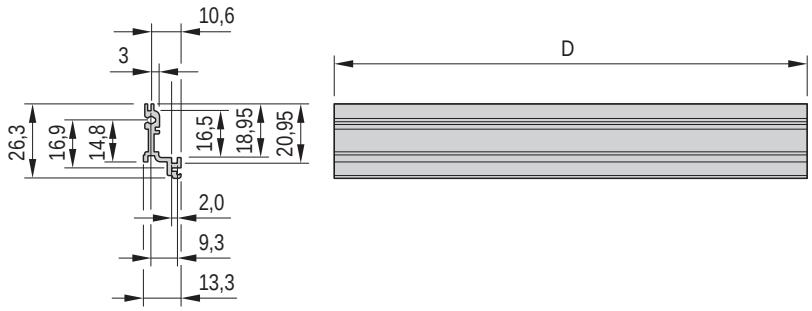


04808103

Depth = 167/227 mm

## Dimensions Side plate

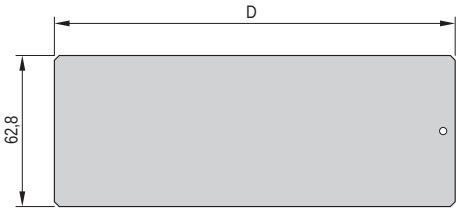


04808100

3 U for side panel rear angle

6

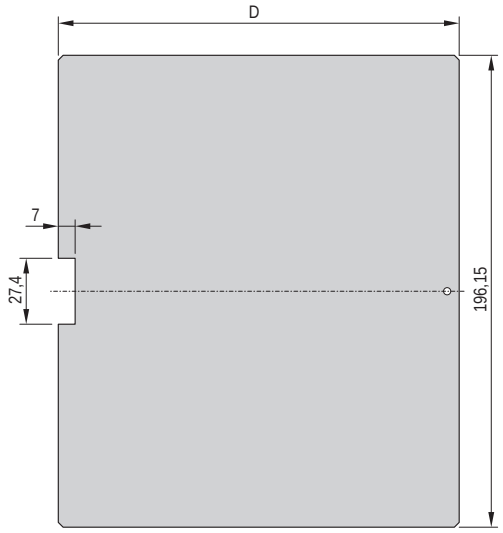


04808099

6 U for side panel rear angle

# Frame type plug-in units PRO

## Dimensions Front panels

Unshielded

3 U

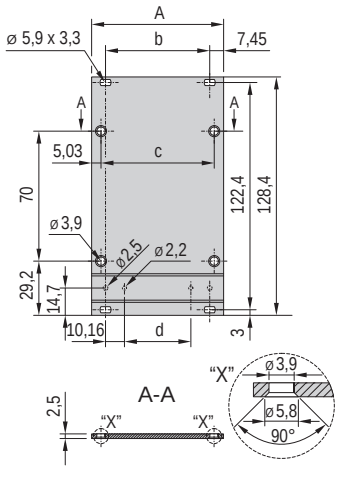


04808086

6 U

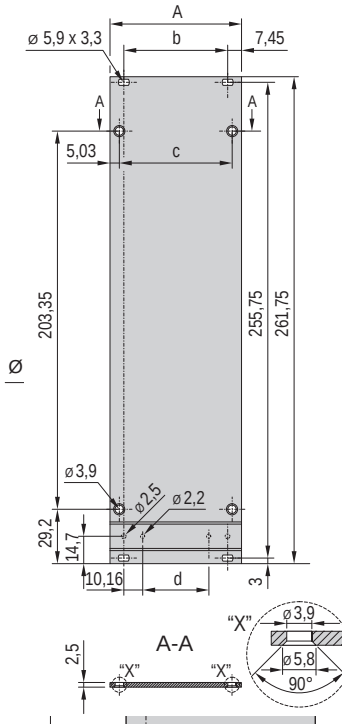


04808087

Shieldable, for EMC textile gasket

3 U

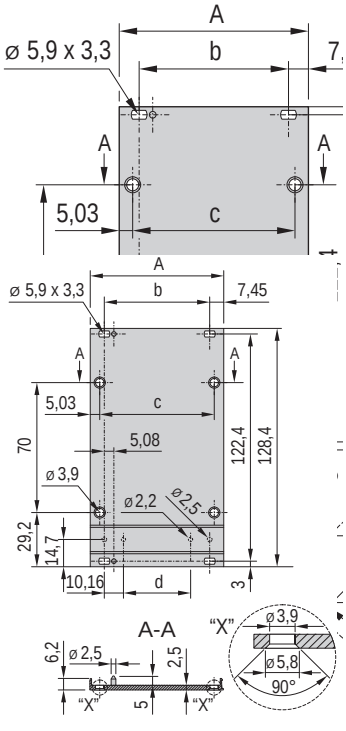


04808088

6 U

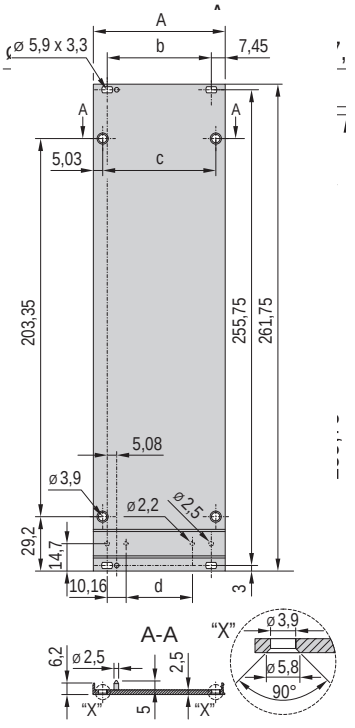


04808089

### Dimensions table

| Width | A mm | b mm | c mm | d mm |
|---|---|---|---|---|
| 8 HP | 40.30 | 25.40 | 30.24 | 5.08 |
| 10 HP | 50.46 | 35.56 | 40.40 | 15.24 |
| 12 HP | 60.62 | 45.72 | 50.56 | 25.40 |
| 14 HP | 70.78 | 55.88 | 60.72 | 35.56 |
| 21 HP | 106.34 | 91.44 | 96.28 | 71.12 |
| 28 HP | 141.90 | 127.00 | 131.84 | 106.68 |
| 42 HP | 213.02 | 198.12 | 202.96 | 177.80 |

## Dimensions Front handle

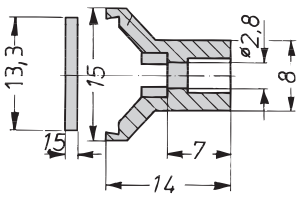


A4-328e

### Dimensions table

| Width HP | Width mm |
|---|---|
| 8 HP | 39.2 |
| 10 HP | 49.4 |
| 12 HP | 59.6 |
| 14 HP | 69.7 |
| 21 HP | 105.2 |
| 28 HP | 140.8 |
| 42 HP | 212.0 |

## Dimensions Rear panel 3 U

Without cut-out

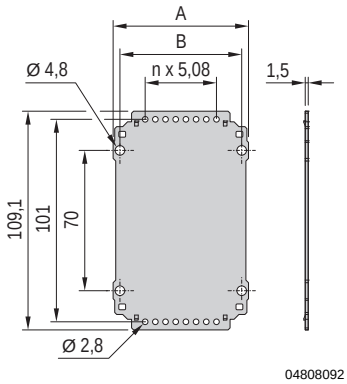

04808092

For one connector

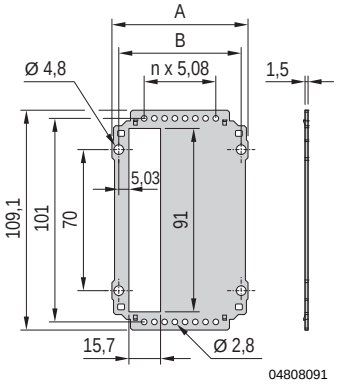

04808091

For multiple connectors

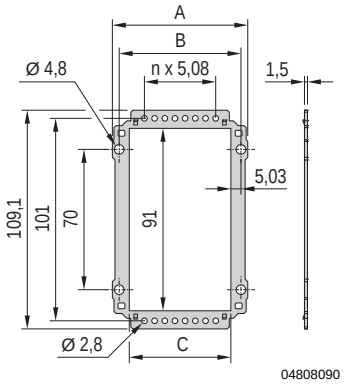

04808090

Dimensions table

| HP | A mm | B mm | C mm |
|---|---|---|---|
| 8 HP | 37.04 | 30.24 | 20.18 |
| 10 HP | 47.20 | 40.40 | 30.34 |
| 12 HP | 57.36 | 50.56 | 40.50 |
| 14 HP | 67.52 | 60.72 | 50.66 |
| 21 HP | 103.08 | 96.28 | 86.22 |
| 28 HP | 138.64 | 131.84 | 121.78 |
| 42 HP | 209.76 | 202.96 | 192.90 |

## Dimensions Rear panel 6 U

Without cut-out

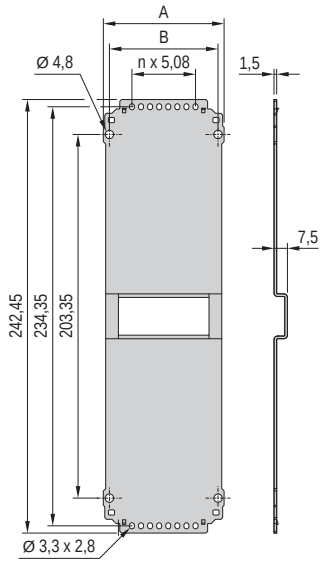

04808095

For one connector

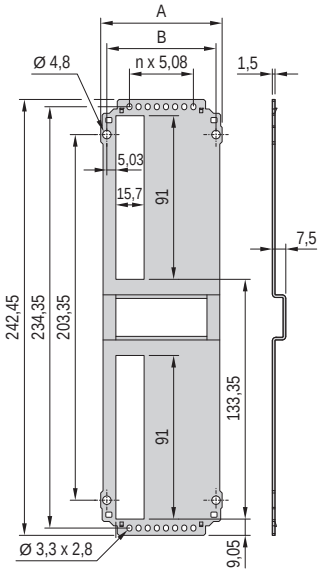

04808094

For multiple connectors

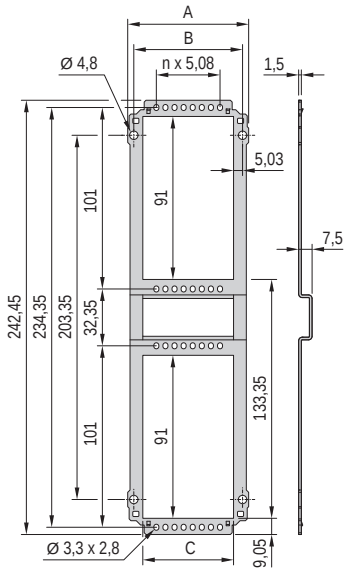

04808093

Dimensions table

| HP | A mm | B mm | C mm |
|---|---|---|---|
| 8 HP | 37.04 | 30.24 | 20.18 |
| 10 HP | 47.20 | 40.40 | 30.34 |
| 12 HP | 57.36 | 50.56 | 40.50 |
| 14 HP | 67.52 | 60.72 | 50.66 |
| 21 HP | 103.08 | 96.28 | 86.22 |
| 28 HP | 138.64 | 131.84 | 121.78 |
| 42 HP | 209.76 | 202.96 | 192.90 |

# Frame type plug-in units PRO

## Dimensions Guide rail

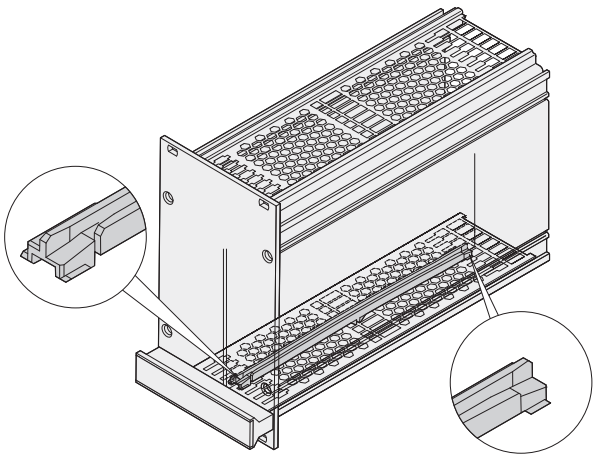

04808096

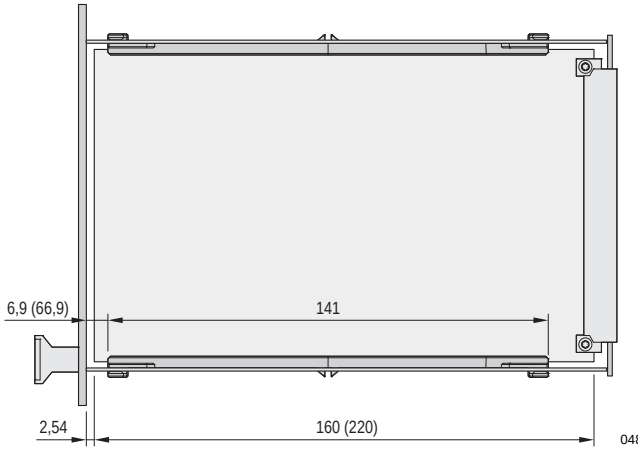


04808088

## Dimensions Cover plates

without perforation

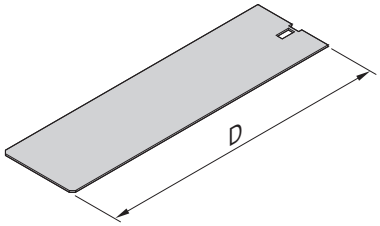


04808104

with perforation

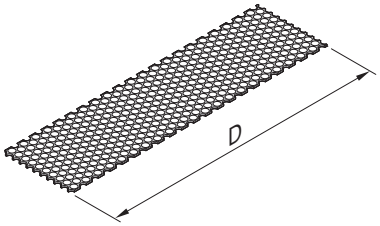


04808106

for guide rail mounting

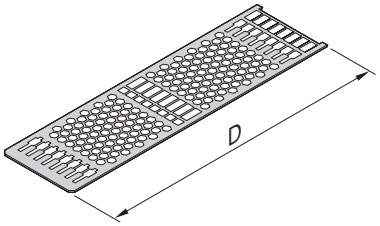


04808105

D = 167/227 mm



Part number in bold face type: ready for despatch within 2 working days
Part number in normal type: ready for despatch within 10 working days

# Frame type plug-in units PRO

## Dimensions Mounting instructions for guide rails in frame type plug-in units

Slot 1 + slot 2

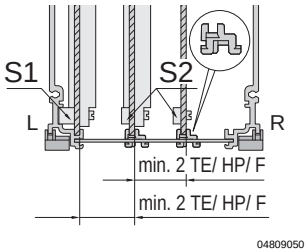


Slot 2

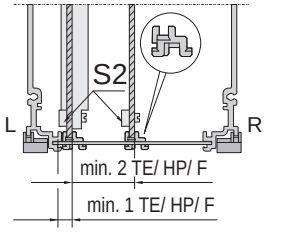


Front view

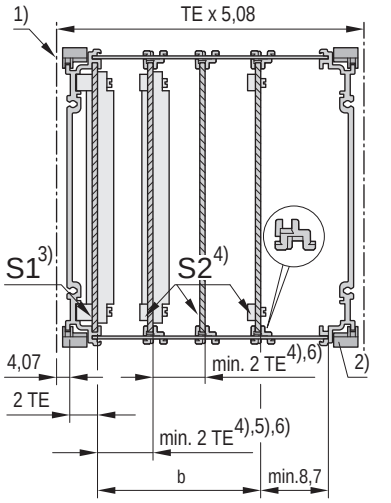


- Mounting pitch for guide rails: 1 HP
- Min. distance between 2 guide rails: 2 HP

| Width of frame type plug-in unit | b | Max. number of PCBs mountable | |
|---|---|---|---|
| HP | mm | slot 1 | from slot 2 |
| 8 | – | 1 | 1 |
| | 5.08 | – | 1 5) |
| 10 | 10.16 | 1 | 1 6) |
| | 15.24 | – | 2 5)6) |
| 12 | 20.32 | 1 | 2 6) |
| | 25.40 | – | 3 5) 6) |
| 14 | 30.48 | 1 | 3 6) |
| | 35.56 | – | 4 5) 6) |
| 21 | 71.12 | 1 | 7 6) |
| | 66.04 | – | 7 5) 6) |
| 28 | 101.60 | 1 | 10 6) |
| | 106.68 | – | 11 5) 6) |
| 42 | 172.72 | 1 | 17 6) |
| | 177.80 | – | 18 5) 6) |

TE = HP = F

1) Division line
2) Guide rail rotated by 180° from standard position
3) The first PCB is held in the extruded side panel, corresponds to standard position (slot 1)
4) All additional PCBs are fitted into guide rails (from slot 2)
5) Min. 1 HP where slot 1 is not used (slot 2)
6) Dependent on construction of connector used (not every connector allows a 2 HP fitting)

## Dimensions Mounting space frame-type plug-in unit 3 U/6 U

Front view

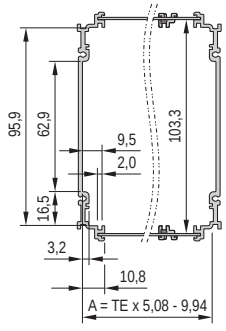


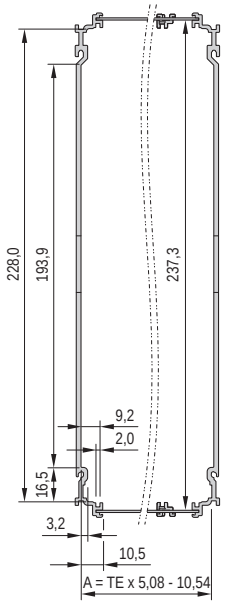


### Dimensions table

| Height | Width | A |
|---|---|---|
| U | HP | mm |
| 3 | 8 | 30.70 |
| 3 | 10 | 40.86 |
| 3 | 12 | 51.02 |
| 3 | 14 | 61.18 |
| 3 | 21 | 96.74 |
| 3 | 28 | 132.30 |
| 3 | 42 | 203.42 |
| 6 | 8 | 30.10 |
| 6 | 10 | 40.26 |
| 6 | 12 | 50.42 |
| 6 | 14 | 60.58 |
| 6 | 21 | 96.14 |
| 6 | 28 | 131,70 |
| 6 | 42 | 202.82 |

# Frame type plug-in units PRO with hood

## Frame type plug-in units PRO with hood, 3/6 U, front panel shielded (textile gasket)




Illustration shows 12 HP width, side panel depth 167 mm

- Protects a PCB against mechanical damage and deflects electrostatic discharge; for euroboard formats
- Suitable in all subracks and these cases: ratiopacPRO/-air, propacPRO and compacPRO
- Useable connectors in accordance with EN 60603-2 (DIN 41612)
- 2 depths, for 160 mm and 220 mm boards

### Delivery comprises (kit)

| Item | Qty | Description |
|---|---|---|
| 1 | 1 | Front panel, U profile, 2.5 mm, front anodised, rear conductive, alignment pin pressed-in |
| 2 | 1 | Handle, grey, PPE, UL 94 V-1 |
| 3 | 1 | Side panel, Al extrusion, colourless passivated, with groove for one PCB |
| 4 | 1 | Hood, Al, 1 mm, with perforation, rear panel integrated |
| 5 | 1 | EMC textile gasket |
| 6 | 1 | Assembly kit (incl. PCB fixing for slot 1) |

ServicePLUS see page 7.74

### Order Information

| 5 HP | 6 ... 14 HP | Height U | Width HP | Depth = 167 mm Part no. | Depth = 227 mm Part no. |
|---|---|---|---|---|---|
| 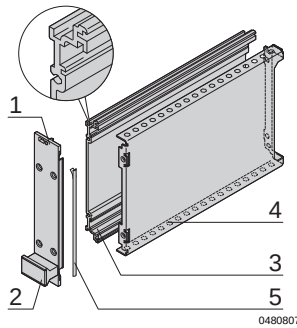 | 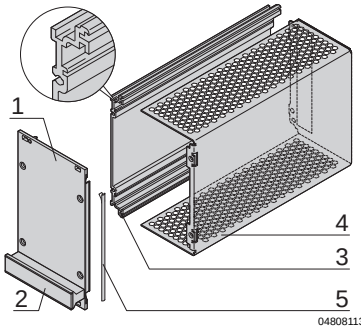 | 3 | 5 | 24813-005 | 24813-055 |
| | | 3 | 6 | 24813-006 | 24813-056 |
| | | 3 | 7 | 24813-007 | 24813-057 |
| | | 3 | 10 | 24813-010 | 24813-060 |
| | | 3 | 12 | 24813-012 | 24813-062 |
| | | 3 | 14 | 24813-014 | 24813-064 |
| 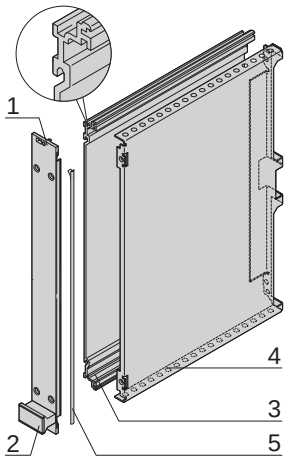 | 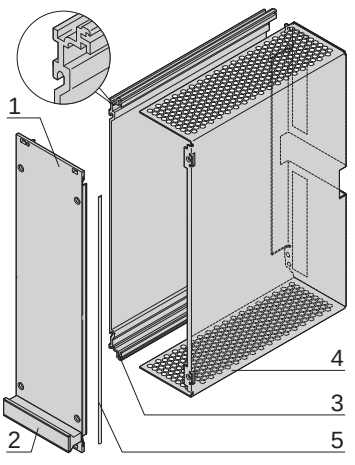 | 6 | 5 | 24813-505 | 24813-555 |
| | | 6 | 6 | 24813-506 | 24813-556 |
| | | 6 | 7 | 24813-507 | 24813-557 |
| | | 6 | 10 | 24813-510 | 24813-560 |
| | | 6 | 12 | 24813-512 | 24813-562 |
| | | 6 | 14 | 24813-514 | 24813-564 |



- Dimension drawings see from page 7.88



Part number in bold face type: ready for despatch within 2 working days
Part number in normal type: ready for despatch within 10 working days

# Frame type plug-in units PRO with hood

## Plug-in units PRO with hood, 3/6 U, front panel unshielded



04808002

Illustration shows 12 HP width, side panel depth 167 mm

- Protects a PCB against mechanical damage and deflects electrostatic discharge; for euroboard formats
- Suitable in all subracks and these cases: ratiopacPRO/-air, propacPRO and compacPRO
- Useable connectors in accordance with EN 60603-2 (DIN 41612)
- 2 depths, for 160 mm or 220 mm board

### Delivery comprises (kit)

| Item | Qty | Description |
|---|---|---|
| 1 | 1 | Front panel, Al, 2.5 mm, anodised, cut edges plain |
| 2 | 1 | Handle, grey, PPE, UL 94 V-1 |
| 3 | 1 | Side panel, Al extrusion, colourless passivated, with groove for one PCB |
| 4 | 1 | Hood, Al, 1 mm, with perforation, rear panel integrated |
| 5 | 1 | Assembly kit (incl. PCB fixing for slot 1) |

ServicePLUS see page 7.74

### Order Information

**5 HP**

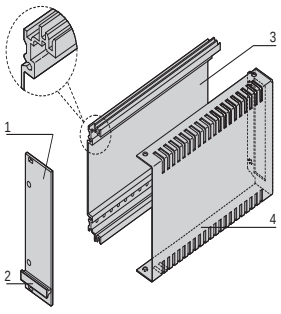


04808077

**6 ... 14 HP**

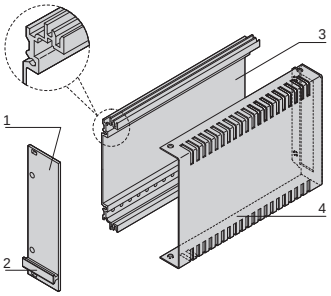


04808115

| Height U | Width HP | Depth = 167 mm Part no. | Depth = 227 mm Part no. |
|---|---|---|---|
| 3 | 5 | 24812-005 | 24812-055 |
| 3 | 6 | 24812-006 | 24812-056 |
| 3 | 7 | 24812-007 | 24812-057 |
| 3 | 10 | 24812-010 | 24812-060 |
| 3 | 12 | 24812-012 | 24812-062 |
| 3 | 14 | 24812-014 | 24812-064 |

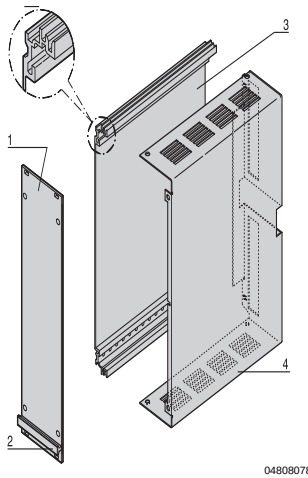


04808078

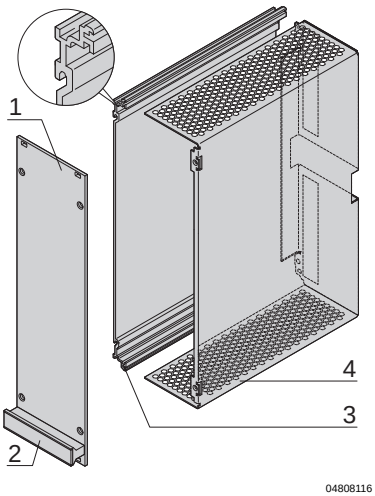


04808116

| | | | |
|---|---|---|---|
| 6 | 5 | 24812-505 | 24812-555 |
| 6 | 6 | 24812-506 | 24812-556 |
| 6 | 7 | 24812-507 | 24812-557 |
| 6 | 10 | 24812-510 | 24812-560 |
| 6 | 12 | 24812-512 | 24812-562 |
| 6 | 14 | 24812-514 | 24812-564 |

- Dimension drawings see from page 7.88

# Frame type plug-in units PRO with hood

## Dimensions Cross-section frame-type plug-in units PRO with hood 3 U/6 U

**3 U**

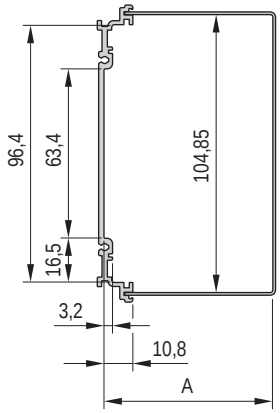


04808080

**6 U**

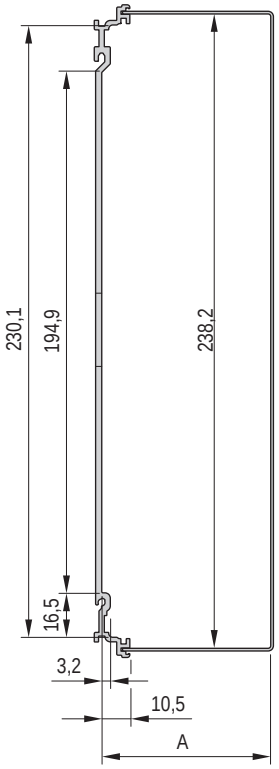


04808082

**Dimensions table**

| Height U | Width HP | A mm |
|---|---|---|
| 3 | 5 | 17.52 |
| 3 | 6 | 22.60 |
| 3 | 7 | 27.68 |
| 3 | 10 | 42.92 |
| 3 | 12 | 53.08 |
| 3 | 14 | 63.24 |
| 6 | 5 | 17.22 |
| 6 | 6 | 22.30 |
| 6 | 7 | 27.38 |
| 6 | 10 | 42.62 |
| 6 | 12 | 57.78 |
| 6 | 14 | 62.94 |

## Dimensions Front handle

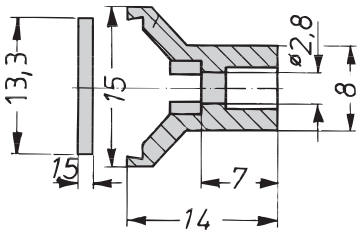


a4-328e

**Dimensions table**

| Width HP | Width mm |
|---|---|
| 5 | 24.0 |
| 6 | 29.0 |
| 7 | 34.1 |
| 10 | 49.4 |
| 12 | 59.6 |
| 14 | 69.7 |



Part number in bold face type: ready for despatch within 2 working days
Part number in normal type: ready for despatch within 10 working days

# Frame type plug-in units PRO with hood

## Dimensions 3/6 U frame-type plug-in units PRO with hood

3 U Front panel shieldable

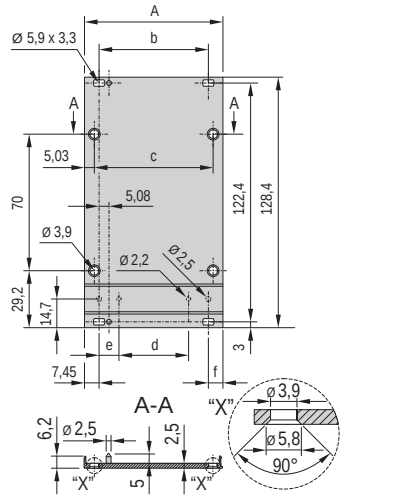


04808052

Front panel unshielded

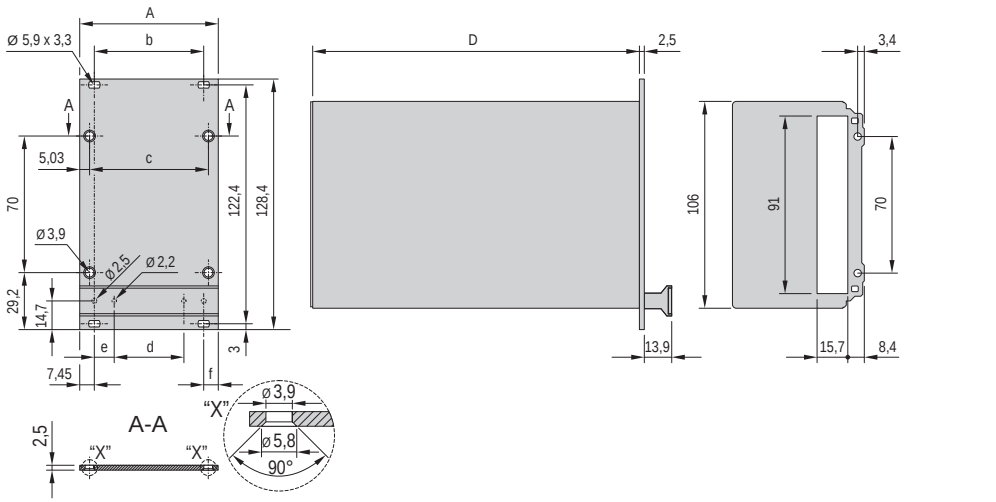


04808111

6 U Front panel shieldable

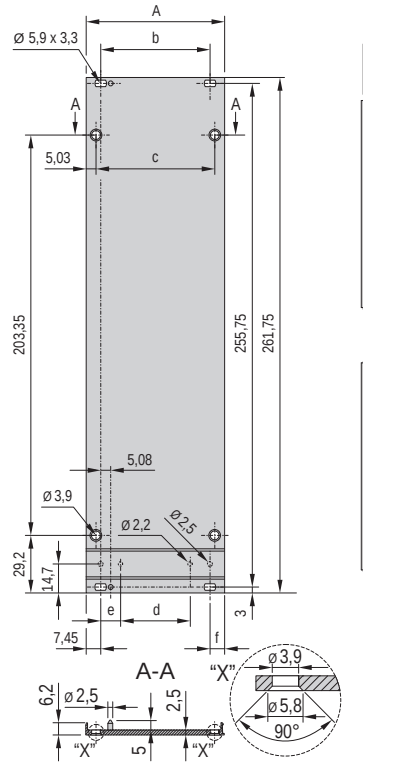


04809053

Front panel unshielded

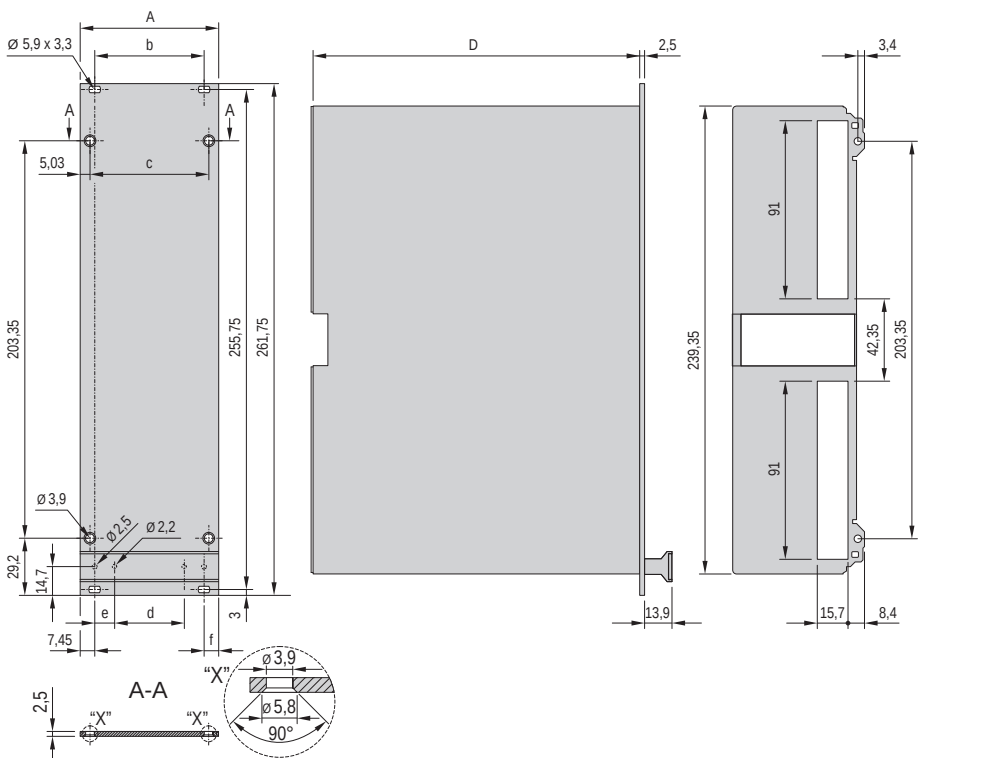


04808112

Front panel

5 HP

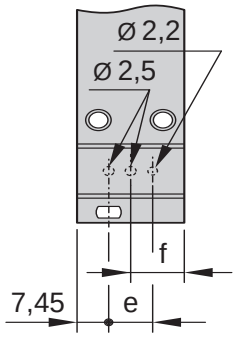


04809067

6 + 7 HP

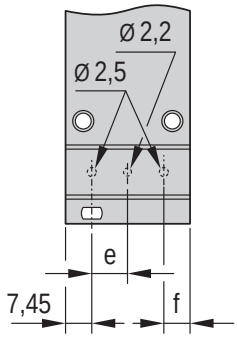


04809066

**Dimensions table**

| Width HP | A mm | b mm | c mm | d mm | e mm | f mm | Depth D mm |
|---|---|---|---|---|---|---|---|
| 5 | 25.06 | - | 15.00 | - | 10.16 | 12.53 | 167 mm/ 227 mm |
| 6 | 30.14 | - | 20.08 | - | 10.16 | 7.45 | |
| 7 | 35.22 | - | 25.16 | - | 10.16 | 7.45 | |
| 10 | 50.46 | 35.56 | 40.40 | 15.24 | 10.16 | 7.45 | |
| 12 | 60.62 | 45.72 | 50.56 | 25.40 | 10.16 | 7.45 | |
| 14 | 70.78 | 55.88 | 60.72 | 35.56 | 10.16 | 7.45 | |

## HF frame type plug-in units, 3 U kits, front panel shielded

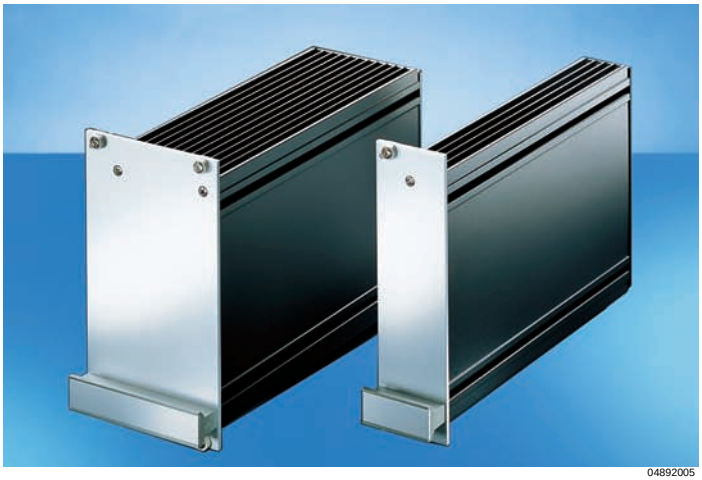


- With high shielding from high-frequency radiation
- To accept boards in HP grid increments
- Solid body on all sides, with cooling fins

### Delivery comprises (kit)

| Item | Qty | Description |
|---|---|---|
| 1 | 1 | Body tube, Al extrusion, black anodised, cut edges plain |
| 2 | 1 | Front panel, Al, 2.5 mm, with lateral grooves for EMC gasket (stainless steel), alignment pin pressed-in, front anodised, rear iridescent green chromated |
| 3 | 1 | Plastic handle, trapeziform, PPE, grey, identification plate, Al, anodised, cut edges plain |
| 4 | 1 | Rear panel, Al, 1.5 mm, etched without cut-outs |
| 5 | 2 | EMC gasket (steel, stainless) |
| 6 | 1 | Assembly kit |

ServicePLUS see page 7.74

### Technical data

| HF plug-in unit | Thermal resistance K/W | |
|---|---|---|
| HP | Depth = 167 mm | Depth = 227 mm |
| 7 | 1.68 | 1.51 |
| 10 | 1.62 | 1.46 |
| 12 | 1.56 | 1.40 |
| 14 | 1.50 | 1.35 |
| 21 | 1.06 | 0.95 |
| 28 | 0.94 | 0.85 |

### Order Information

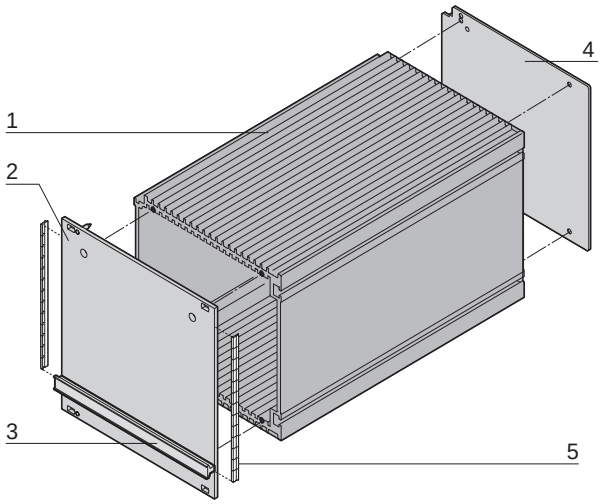


| Height U | Width HP | Depth = 167 mm Part no. | Depth = 227 mm Part no. |
|---|---|---|---|
| 3 | 7 | 20809-529 | 20809-536 |
| 3 | 10 | 20809-530 | 20809-537 |
| 3 | 12 | 20809-531 | 20809-538 |
| 3 | 14 | 20809-532 | 20809-539 |
| 3 | 21 | 20809-533 | 20809-540 |
| 3 | 28 | 20809-534 | 20809-541 |

### Note

- Dimension drawings see from page 7.94

**For further information www.schroff.biz/oneclick**
oneClick search code = Part no.



Part number in bold face type: ready for despatch within 2 working days
Part number in normal type: ready for despatch within 10 working days

Individual components — HF body tube, front panels with handle, rear panels

## Order Information

| Height U | Width HP | HF body tube | Shieldable front panel, with handle | Shieldable front panel, with handle, for EMC gasket (stainless steel) | Shieldable front panel, with handle, EMC gasket (stainless steel) | Shieldable front panel, with handle, Assembly tool | Rear panel, without cut-out | Rear panel, with cut-out |
|---|---|---|---|---|---|---|---|---|
| | | 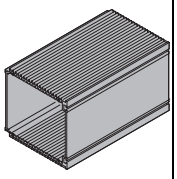 KAA45832 | 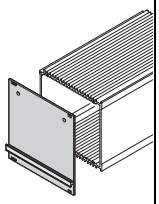 KAA45831 | 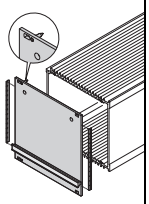 04807074 | 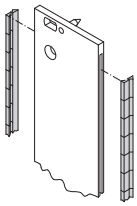 bga45760 | 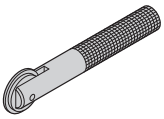 aza45937 | 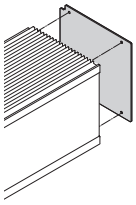 04807075 | 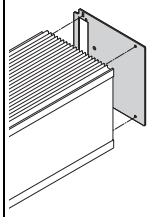 KAA45834 |
| | | Al extrusion, black anodised, cut edges plain | Al, 2.5 mm, front anodised, rear iridescent green chromated; static handle, grey, PPE, UL 94 V-1 | Al, 2.5 mm, front anodised, rear iridescent green chromated, with lateral grooves for stainless steel EMC gasket (please order separately), alignment pin pressed-in, trapeziform handle, grey, PPE, UL 94 V-1 | inserted laterally into the grooves of the front panel | to mount the EMC gasket (stainless steel) | Al, 1.5 mm, etched | Al, 2.5 mm, etched, cut-out for connector types EN 60603 (DIN 41612); 7 HP: B, C, D, R; 10 - 28 HP: B, C, D, R, F, H, MF, MH |
| | | **1 piece (SPQ 5)[1)]** | **1 piece (SPQ 5)[1)]** | **1 piece (SPQ 5)[1)]** | **PU 100 pieces** | **1 piece** | **1 piece (SPQ 5)[1)]** | **1 piece (SPQ 5)[1)]** |
| | | PCB depth 160 mm | | | | | | |
| 3 | 7 | 30809-667 | 20838-001 | 20838-093 | 21101-705 | 24560-270 | 30809-635 | 30809-641 |
| | 10 | 30809-677 | 20838-002 | 20838-094 | | | 30809-636 | 30809-642 |
| | 12 | 30809-675 | 20838-003 | 20838-095 | | | 30809-637 | 30809-643 |
| | 14 | 30809-673 | 20838-004 | 20838-096 | | | 30809-638 | 30809-644 |
| | 21 | 30809-671 | 20838-005 | 20838-097 | | | 30809-639 | 30809-645 |
| | 28 | 30809-669 | 20838-006 | 20838-098 | | | 30809-640 | 30809-646 |
| | | PCB depth 220 mm | | | | | | |
| 3 | 7 | 30809-668 | 20838-001 | 20838-093 | 21101-705 | 24560-270 | 30809-635 | 30809-641 |
| | 10 | 30809-678 | 20838-002 | 20838-094 | | | 30809-636 | 30809-642 |
| | 12 | 30809-676 | 20838-003 | 20838-095 | | | 30809-637 | 30809-643 |
| | 14 | 30809-674 | 20838-004 | 20838-096 | | | 30809-638 | 30809-644 |
| | 21 | 30809-672 | 20838-005 | 20838-097 | | | 30809-639 | 30809-645 |
| | 28 | 30809-670 | 20838-006 | 20838-098 | | | 30809-640 | 30809-646 |
| | | Depth 1000 mm (without thread for front panel and rear panel) | | | | | | |
| 3 | 7 | 30809-679 | – | – | – | – | – | – |
| | 10 | 30809-698 | | | | | | |
| | 12 | 30809-699 | | | | | | |
| | 14 | 30809-680 | | | | | | |
| | 21 | 30809-681 | | | | | | |
| | 28 | 30809-682 | | | | | | |
| Dimensions see page | | 7.94 | 7.95 | | | | 7.94 | |

1) SPQ (standard pack quantity): Part number includes 1 piece, but delivery is exclusively made in standard pack quantity (SPQ); please order at least the SPQ quantity or a multiple

Part no. includes one packing unit (PU); delivery is exclusively made in PU

**For further information www.schroff.biz/oneclick**
oneClick search code = Part no.

## Individual components — Slide nuts, fixing for PCBs, mounting kit

### Order Information

| Height U | Width HP | Slide nut M 2.5 | Slide nut M 3 | Fixing for PCBs: Individual components top | Fixing for PCBs: Individual components bottom | Fixing for PCBs: Complete assembly kit | Fixing material for one HF frame type plug-in unit |
|---|---|---|---|---|---|---|---|
| | | 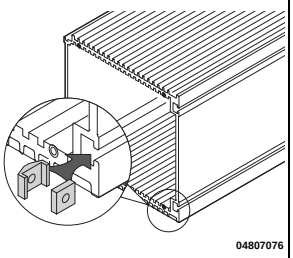 04807076 | | 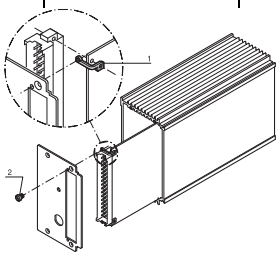 KAA45843 | | | |
| | | width across flats (WAF) 7, for insertion into HF body tube, top and bottom, provides lateral fixing (on right) | | bracket (stainless steel), 1.5 mm; please order retention screws separately | | bracket top and bottom (stainless steel), 1.5 mm; incl. two cheesehead screws M2.5 x 4 | for complete assembly of a 3 U HF frame type plug-in unit: front panel, rear panel and handle, description see page 7.93 |
| | | PU 100 pieces | PU 100 pieces | 1 piece (SPQ 10)[1] | 1 piece (SPQ 10)[1] | PU 1 kit | PU 1 kit |
| 3 | 7 | 21100-112 | 21100-289 | 30809-701 | 30809-700 | 21101-937 | 21100-105 |
| | 10 | | | | | | |
| | 12 | | | | | | |
| | 14 | | | | | | |
| | 21 | | | | | | |
| | 28 | | | | | | |
| **Accessories** | | | | | | | |
| Cheesehead screw M2.5 × 4, St, nickel-plated, PU 100 pieces | | – | – | 21100-431 | 21100-431 | – | – |

1) SPQ (standard pack quantity): Part number includes 1 piece, but delivery is exclusively made in standard pack quantity (SPQ); please order at least the SPQ quantity or a multiple

Part no. includes one packing unit (PU); delivery is exclusively made in PU

**For further information www.schroff.biz/oneclick**
oneClick search code = Part no.

Individual components — Fixing material (100 pieces)

## Order Information

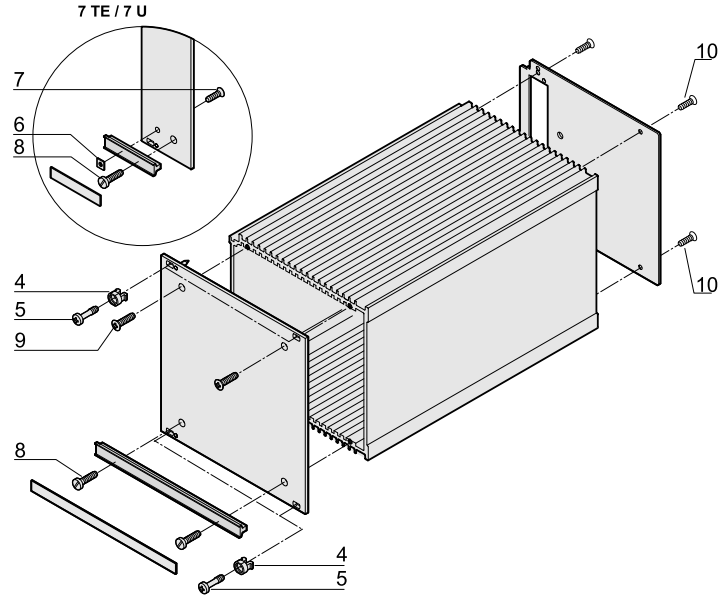


| Description | Item | | Required quantity per plug-in unit | | Description | Qty/PU | Part no. |
|---|---|---|---|---|---|---|---|
| **Fixing parts for mounting the module in subrack or case** | | | | | | | |
| Plastic sleeve for form hole 5.9 x 3.3, PA, UL 94 V-2, grey | 4 | aza45933 | 2 at 7 HP<br>4 at > 7 HP | | Front panel is fitted to horizontal rail with threaded insert pushed in to front | 100 | 21100-464 |
| Pozidrive/slotted collar screw M2.5 × 11, St, nickel-plated | 5 | aza46586 | 2 at 7 HP<br>4 at > 7 HP | 06107050 | Front panel is fitted to horizontal rail with threaded insert pushed in to front | 100 | 21100-748 |
| Pozidrive/slotted collar screw M2.5 × 12.3, St, nickel-plated | 5 | aza46586 | 2 at 7 HP<br>4 at > 7 HP | 06107051 | Front panel is fitted to horizontal rail with threaded insert pushed in to rear in the standard position | 100 | 21101-101 |
| **Fixing parts for mounting the module** | | | | | | | |
| Square nut DIN 562, M2.5,St, nickel-plated | 6 | 06705050 | 1 at 7 HP | | To mount handle on front panel | 100 | 21100-359 |
| Pozidrive countersunk screw M2.5 × 12, St, nickel-plated | 7 | aza45177 | 1 at 7 HP | | To mount handle on front panel | 100 | 21100-507 |
| Slotted cheesehead screw M2.5 × 16, St, nickel-plated | 8 | aza45467 | 1 at 7 HP<br>2 at > 7 HP | | To mount handle and front panel on HF body tube | 100 | 21100-150 |
| Raised Pozidrive countersunk panhead screw M2.5 × 8, St, nickel-plated | 9 | 06702056 | 2 | | To mount front panel on HF body tube | 100 | 21100-429 |
| Pozidrive countersunk screw M2.5 × 6, St, nickel-plated | 10 | 06702056 | 4 | | To mount rear panel on HF body tube | 100 | 21100-515 |

### Note

■ Further collar screws and sleeves see page 7.107

# HF frame type plug-in units

## Dimensions HF body tube

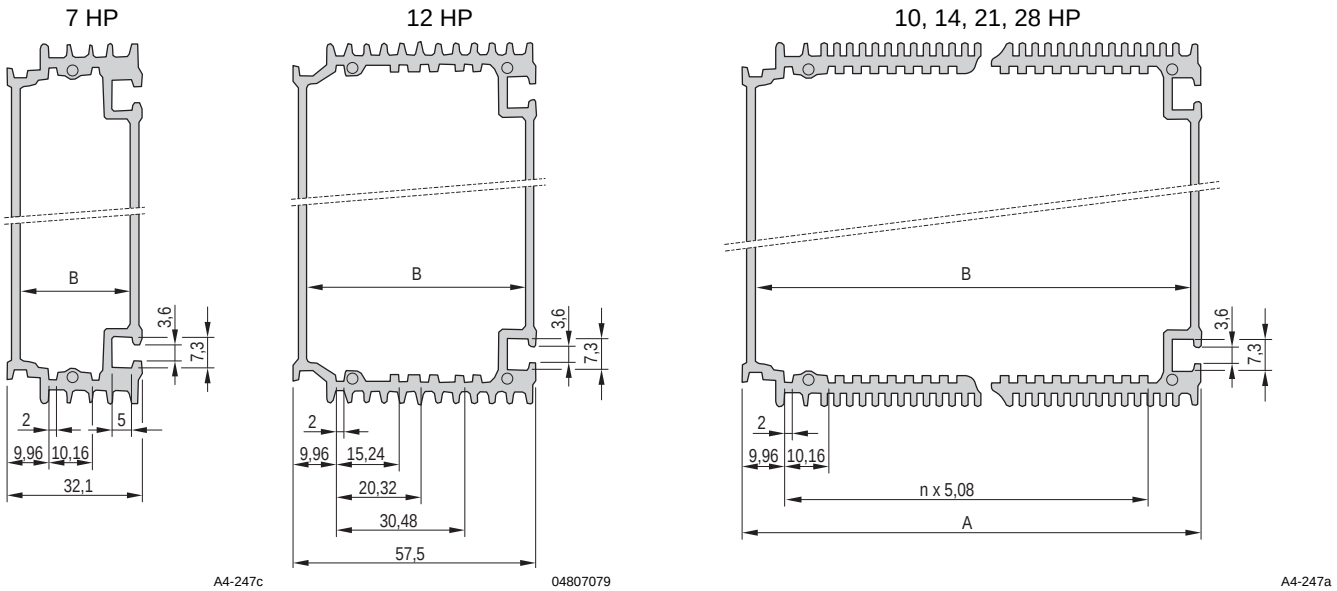


**Dimensions table**

| Dimension | 7 HP | 10 HP | 12 HP | 14 HP | 21 HP | 28 HP |
|---|---|---|---|---|---|---|
| mm | | | | | | |
| n | – | 3 × 5.08 | – | 7 × 5.08 | 14 × 5.08 | 21 × 5.08 |
| A | – | 47.34 | – | 67.66 | 103.22 | 138.78 |
| B | 26.34 | 41.58 | 51.74 | 61.90 | 97.46 | 133.02 |

## Dimensions Rear panel with/without cut-out for connector

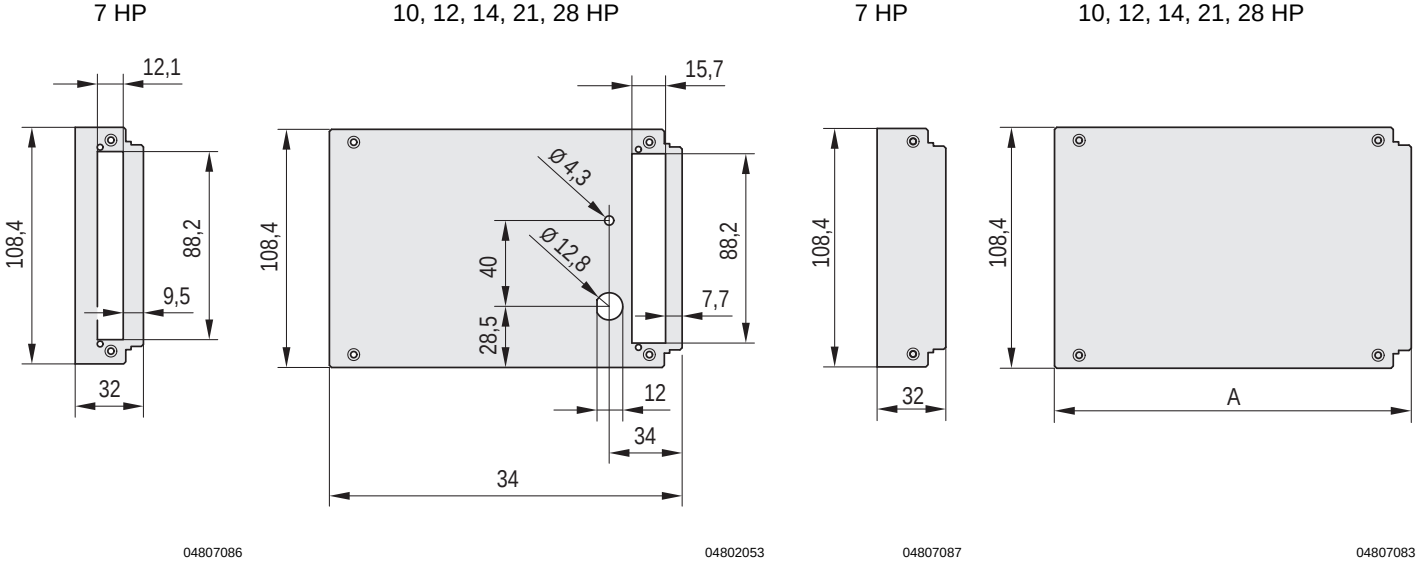


**Dimensions table**

| Width | A |
|---|---|
| | mm |
| 7 HP | 32.00 |
| 10 HP | 47.24 |
| 12 HP | 57.40 |
| 14 HP | 67,40 |
| 21 HP | 103.12 |
| 28 HP | 136.68 |



Part number in bold face type: ready for despatch within 2 working days
Part number in normal type: ready for despatch within 10 working days

# HF frame type plug-in units

## Dimensions Front panels

Unshielded

7 HP

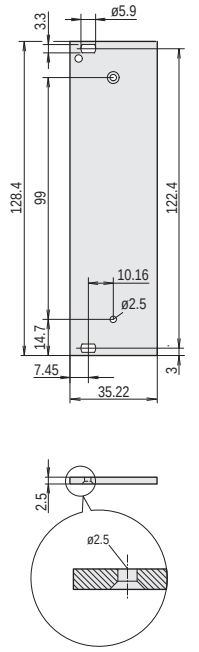


KAA43073

10, 12, 14, 21, 28 HP

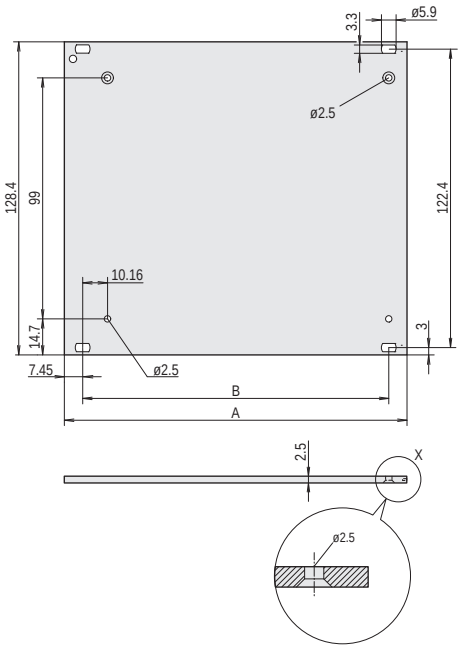


04807084

Shieldable, slotted for EMC stainless steel gasket

7 HP

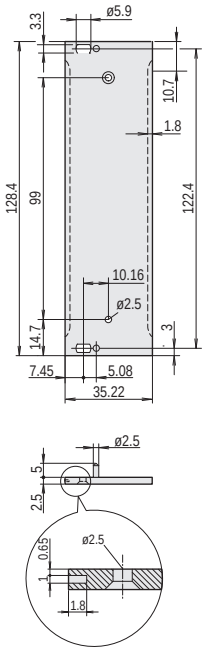


04807085

10, 12, 14, 21, 28 HP

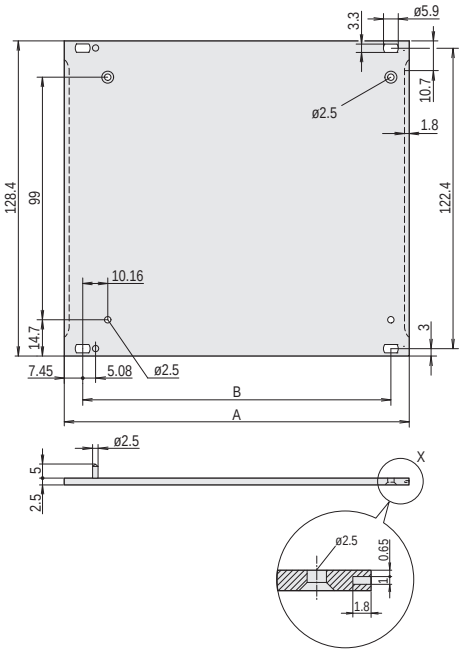


04803052

### Dimensions table

| Width | A | w |
|---|---|---|
| | mm | mm |
| 7 HP | 32.22 | – |
| 10 HP | 50.46 | 35.56 |
| 12 HP | 60.62 | 45.72 |
| 14 HP | 70.78 | 55.88 |
| 21 HP | 106.34 | 91.44 |
| 28 HP | 141.90 | 127.00 |

## Dimensions Front handle

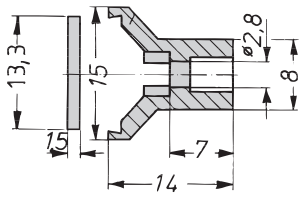


A4-328e

### Dimensions table

| Width | Width |
|---|---|
| HP | mm |
| 10 HP | 49.4 |
| 12 HP | 59.6 |
| 14 HP | 69.7 |
| 21 HP | 105.2 |
| 28 HP | 140.8 |

## Adaptor for horizontal rail mounting

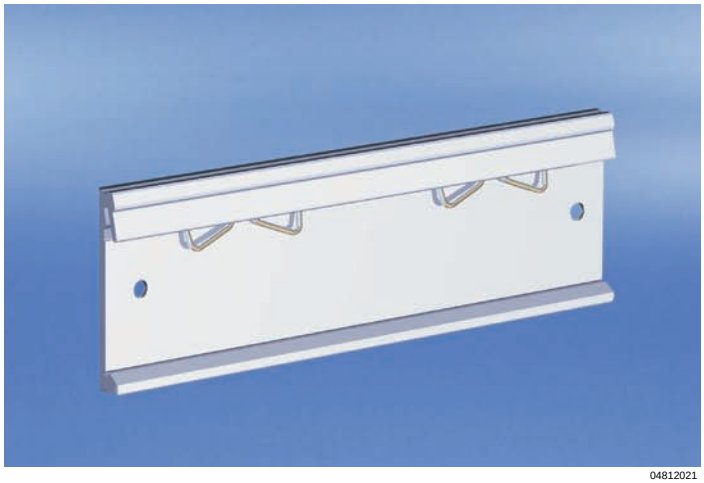

04812021

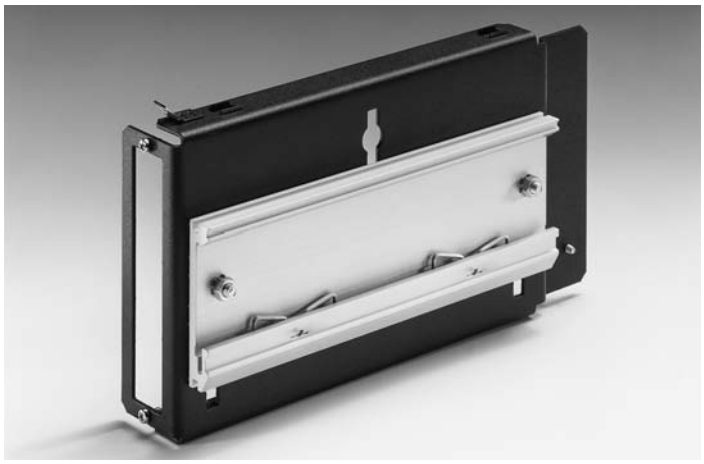

11395007

Example: horizontal rail adaptor with lip for 19" PSU

- For fitting of e.g. subracks, wall mounted cases, frame type plug-in units or PSUs on a horizontal rail with lip
- Adaptor is bolted to the desired product and can then be clipped onto the lipped horizontal rail (DIN 43880)

### Delivery comprises

| Item | Qty | Description |
|---|---|---|
| 1 | 1 | Adaptor, Al extrusion, length 160 mm |
| 1 | 1 | Fixing material |

### Order Information

| Description | Part no. |
|---|---|
| Adaptor for horizontal rail mounting | 11000-002 |

**For further information www.schroff.biz/oneclick**
oneClick search code = Part no.

# Frame type plug-in units

Overview . . . . . 0
Cabinets . . . . . 1
Wall mounted cases . . . . . 2
Accessories for cabinets and wall mounted cases 3
Climate control 4
Desk-top cases 5
Subracks/ 19" chassis . . . 6
Front panels, plug-in units . . 7
Systems . . . . . 8
Power supply units . . . . . 9
Backplanes . . 10
Connectors, front panel component system . . . . . 11
Appendix . . . . 12

# minipac

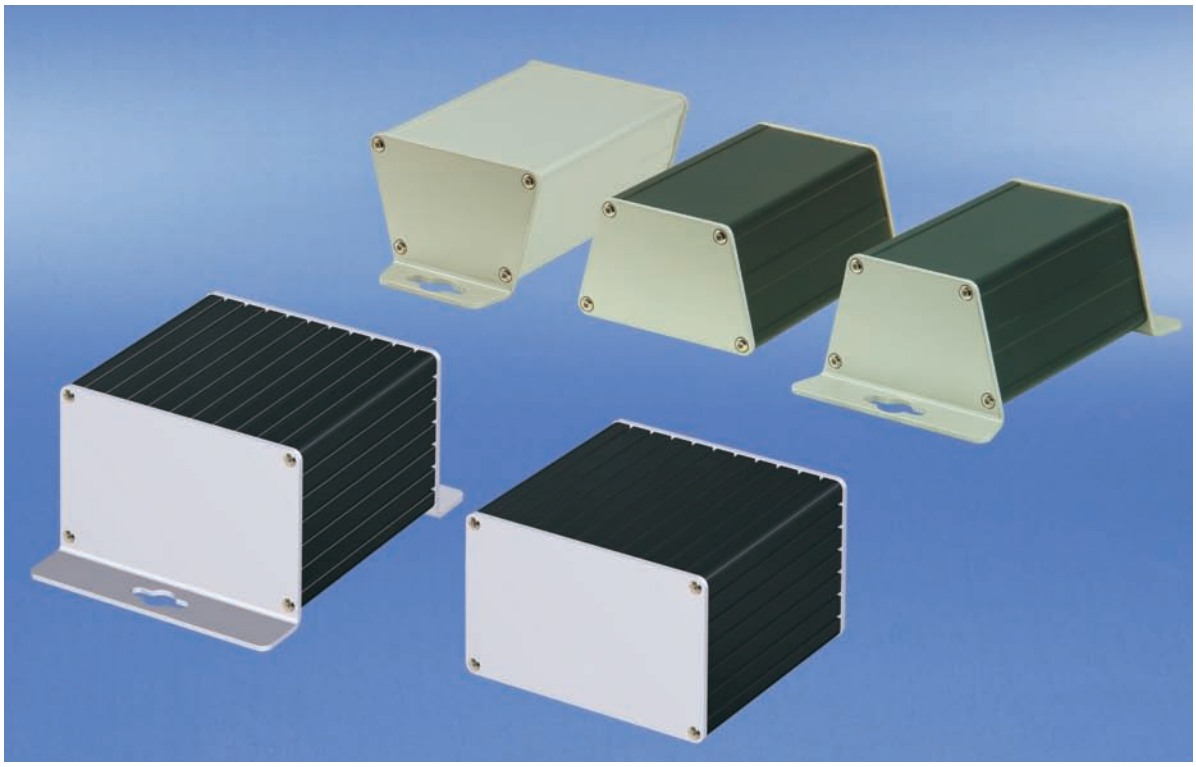

04812001

## Small aluminium extrusion cases to hold PCBs

- For applications e.g. in industry, railway technology, test and measurement, communications and network technology

### Fixing options

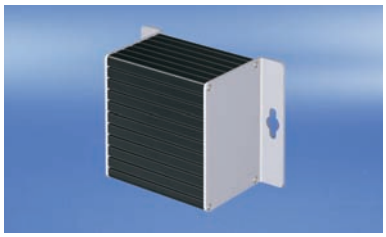

04812006

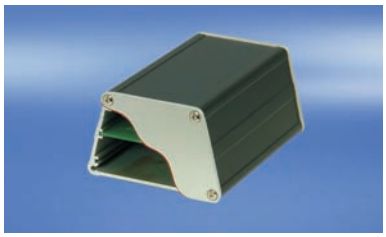

04811015



04812003

### Various dimensions/colours

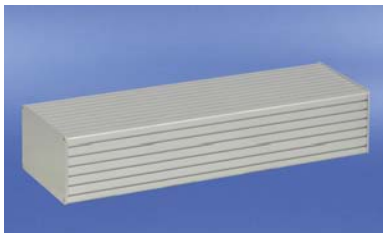

04812023



04812024



04812025

### Individual shapes



04812026



04812027



04812028

Overview .... 7.98

## Convenient small case - flexible enough for all your requirements

- **To accomodate standardised and non-standardised PCBs**
- **As desktop enclosure, for bolting (e.g. to a mounting plate) or for mounting on DIN support rail (DIN 43880)**
- **High level of heat dissipation through large aluminimum surface of case**
- **High stability**
- **Type of protection: IP 40**

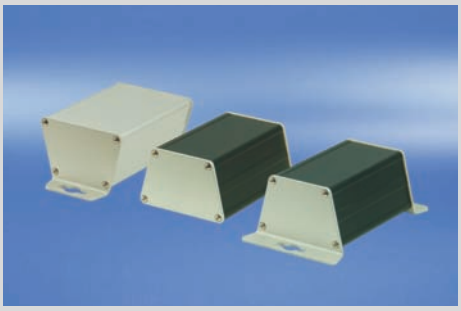

04811014

### Trapezium shape

- Accommodates up to 3 PCBs of different heights - 50, 60 or 65 mm and board depth 100 or 160 mm
- As desktop enclosure, for wall mounting or for mounting on DIN support rail (DIN 43880)

Trapezium shape . . . . . 7.100

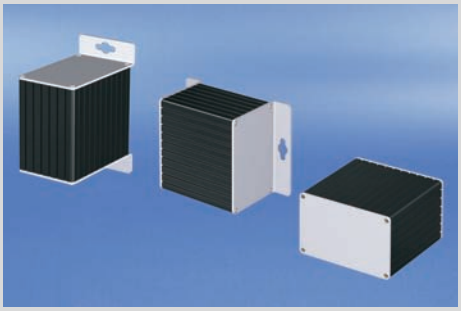

04812002

### Rectangular shape

- Accommodates up to 4 standardised PCBs in euroboard format, height 100 mm (3 U) or up to 8 non-standardised PCBs, height 60 mm and board depth 160 mm
- Versions as desktop enclosure or for wall mounting

Rectagonal shape . . . . . 7.101




30407004

### Individual cases in aluminium extrusion - our minipac variety to your specifications

- Other case lengths
- Other case shapes
- Cut-outs for lamps, switches, connectors, cable ducting, etc.
- Individual printing of cover plates
- Surface finish anodised or powder-coated

FRONT PANEL EXPRESS

30402151

## Trapezium shape

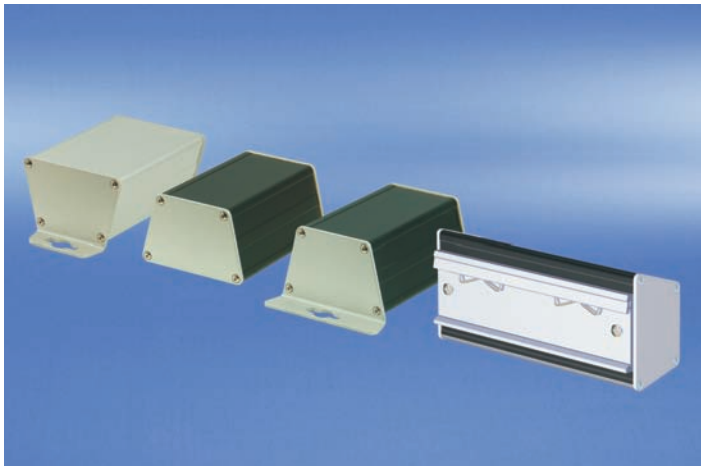

04812004

- Accommodates 3 non-standardised PCBs (height 50, 60 and 65 mm, depth 100/160 mm)
- PCB thickness 1.6 mm, spacing 15.24 mm (3 HP)
- Different versions
  - Wall mounting
  - For mounting on a DIN support rail (DIN 43880)
  - Desktop version

NEW

### Delivery comprises

| Item | Qty | Description |
|---|---|---|
| 1 | 1 | Case, trapeziform, Al extrusion |
| 2 | 2 | Lateral cover plate, 2.5 mm, anodised |
| 3 | 1 | Fixing material kit, user manual |

### Order Information

| Description | Length mm | Part no. |
|---|---|---|
| Case, trapeziform, Al extrusion, black anodised; lateral cover plates anodised, thickness 2.5 mm (no mounting option) | 100.5 | 24814-008 |
| Case, trapeziform, Al extrusion, black anodised, lateral cover plates anodised, thickness 2.5 mm (for wall mounting on long side of trapezoid) | 100.5 | 24814-010 |
| Case, trapeziform, Al extrusion, anodised; lateral cover plates anodised, thickness 2.5 mm (for wall mounting on short side of trapezium) | 100.5 | 24814-011 |
| Case, trapeziform, Al extrusion, black anodised; for DIN support rail mounting (DIN 43880); lateral cover plates anodised, thickness 2.5 mm (for mounting on a DIN support rail, DIN 43880) | 160.5 | 24814-014 |
| **Accessories** | | |
| **Rubber foot** for desktop version, PU 4 pieces | | 21102-025 |

### Note

- **On request:**
  - Other case lengths
  - Cut-outs for LEDs, switches, connectors or couplings (USB, SUB-D)
  - Individual printing on cover plate

**For further information www.schroff.biz/oneclick**
oneClick search code = Part no.

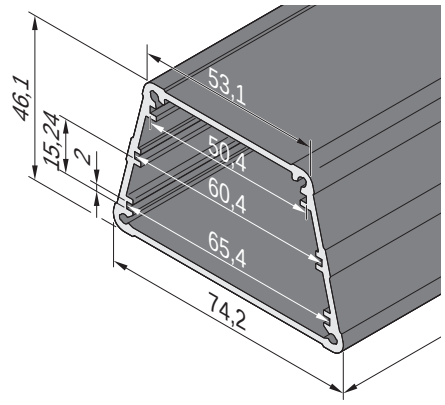


04811053

Dimensions of body tube

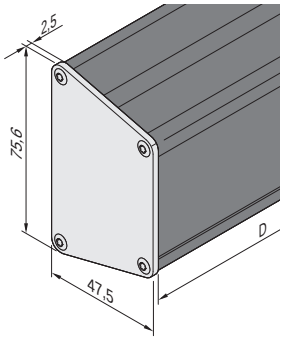


04812053

Desktop version

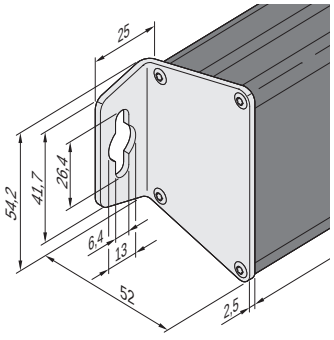


04812052

Wall mounting
(on short side of trapezoid)

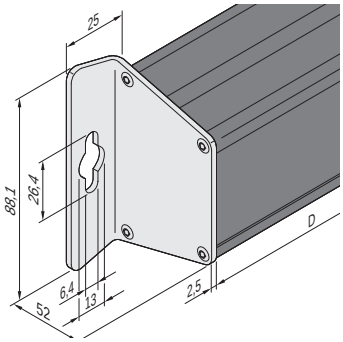


04812051

Wall mounting
(on long side of trapezoid)

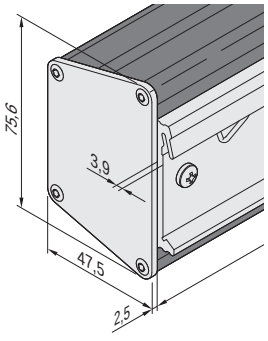


04812057

For mounting on a DIN support rail (DIN 43880)



Part number in bold face type: ready for despatch within 2 working days
Part number in normal type: ready for despatch within 10 working days

## Rectangular shape

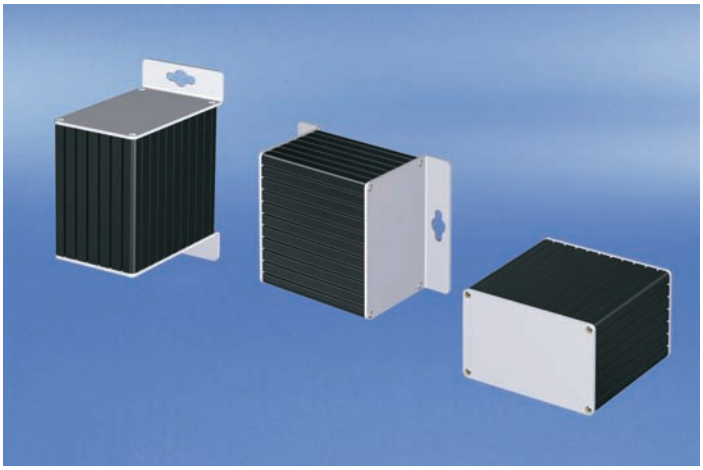

04812002

- Accommodates 4 standardised PCBs (height 100 mm, depth 160 mm) or rotated by 90° to accomodate 8 non-standardised PCBs (height 60 mm, depth 160 mm)
- PCB thickness 1.6 mm, spacing 15.24 mm (2 HP)
- Different versions
  - Wall mounting
  - Desktop version

NEW

### Delivery comprises

| Item | Qty | Description |
|---|---|---|
| 1 | 1 | Case, rectangular, Al extrusion |
| 2 | 2 | Lateral cover plate, 2.5 mm, anodised |
| 3 | 1 | Fixing material kit, user manual |

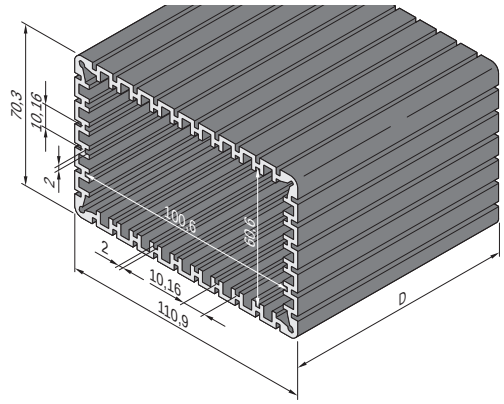


04812050

Dimensions of body tube

### Order Information

| Description | Length mm | Part no. |
|---|---|---|
| Case, rectangular, Al extrusion, black anodised; lateral cover plates anodised, thickness 2.5 mm (desktop version) | 160.5 | 24814-024 |
| Case, rectangular, Al extrusion, anodised; lateral cover plates anodised, thickness 2.5 mm (for wall mounting on long side) | 160.5 | 24814-025 |
| Case, rectangular, Al extrusion, anodised; lateral cover plates anodised, thickness 2.5 mm (for wall mounting on short side) | 160.5 | 24814-027 |
| **Accessories** | | |
| **Rubber foot** for desktop version, PU 4 pieces | | 21102-025 |

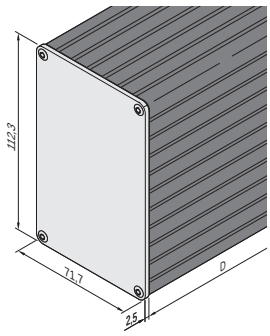


04812056

Desktop version

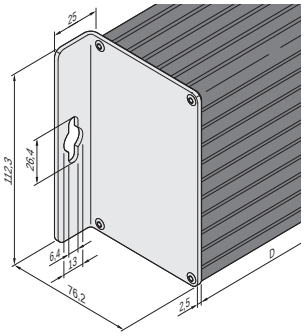


04812055

Wall mounting
(on long side of rectangle)

### Note

- **On request:**
  - Other case lengths
  - Cut-outs for LEDs, switches, connectors or couplings (USB, SUB-D)
  - Individual printing on cover plate

**For further information www.schroff.biz/oneclick**
oneClick search code = Part no.

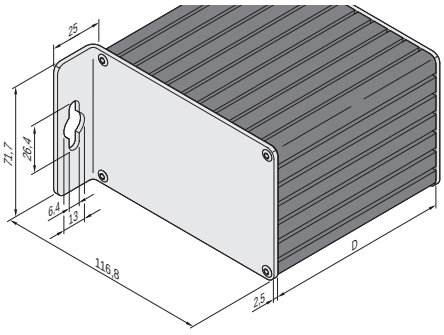


04812054

Wall mounting (on short side of rectangle)

# PCB accessories

## PCB handle C

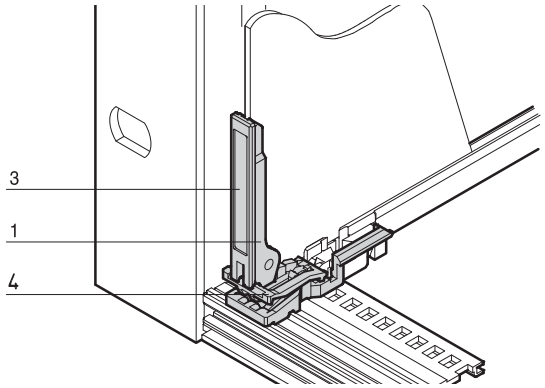


BPA45909

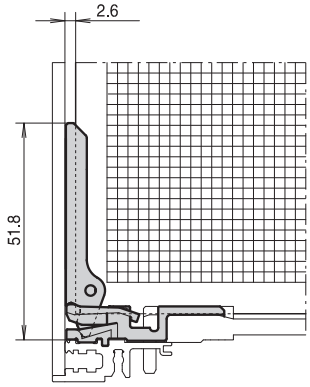


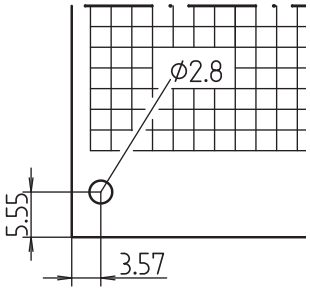


BPA45910 BPA45910

- For europacPRO, multipacPRO, ratiopacPRO, propacPRO and compacPRO
- Mounts behind front panel
- Insertion and extraction
- Can be labelled
- In accordance with IEC 60297-3-102

### Order Information

| Item | Description | Material | Colour | Qty/PU | Part no. |
|---|---|---|---|---|---|
| 1 | PCB handle C | PBT, UL 94 V-0 | red | 10 | 24560-378 |
| 3 | Identification strip (1 sheet = 438 pieces) | Polyester film, self-adhesive | white/ matt | 1 | 60817-228 |

### Note

- Minimum spacing of guide rail 3 HP
- for board thickness 1.6 mm
- Please order PCB retainer C separately

**For further information www.schroff.biz/oneclick**
oneClick search code = Part no.

## PCB retainer C

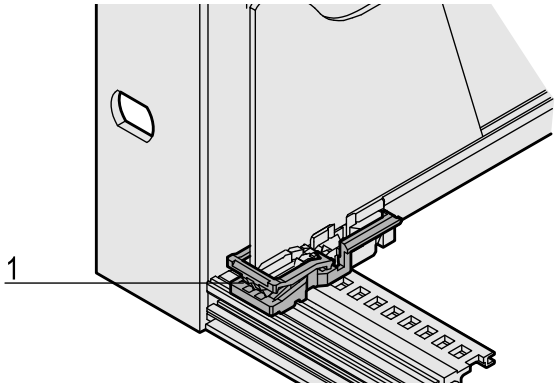


06002057

- For europacPRO, multipacPRO, ratiopacPRO, propacPRO and compacPRO
- Can also be used without PCB handle
- Application on top and bottom horizontal rail with "accessory" type guide rail

### Order Information

| Item | Description | Material | Colour | Qty/PU | Part no. |
|---|---|---|---|---|---|
| 1 | PCB retainer C | PBT, UL 94 V-0 | red | 10 | 24560-377 |

### Note

- Minimum spacing of guide rail 3 HP
- Cannot be used with propac, compac, inpac cases

**For further information www.schroff.biz/oneclick**
oneClick search code = Part no.

## PCB handle B1

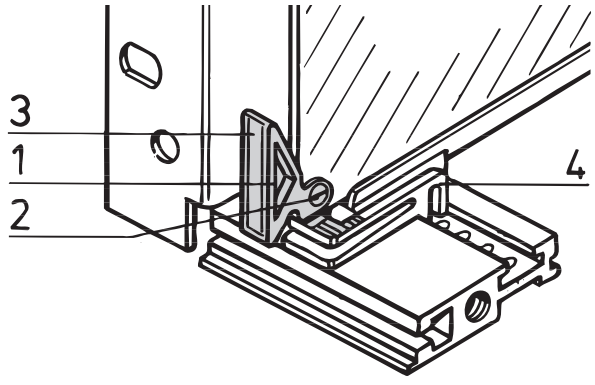


B42729

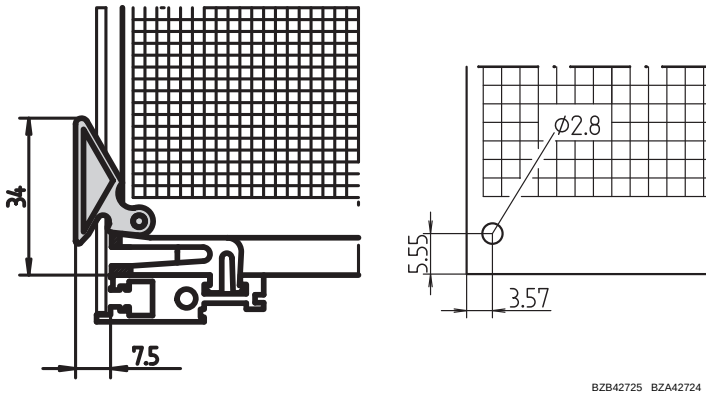


BZB42725 BZA42724

- For bolting or riveting to 1.6 mm PCBs (top and bottom)
- Extraction function only
- Can be labelled

### Order Information

| Item | Description | Material | Colour | Qty/PU | Part no. |
|---|---|---|---|---|---|
| 1 | PCB handle, bolt-on | PBT, UL 94 V-0 | red | 1 piece (SPQ 10) | 60817-067 |
| 1a | PCB handle for rivet fitting | PBT, UL 94 V-0 | red | 1 piece (SPQ 10) | 60817-072 |
| 2 | Countersunk screw | St, nickel-plated, DIN 965 | – | 100 | 21100-515 |
| 2a | Tubular rivet | Brass, DIN 7340 | – | 100 | 21100-076 |
| 3 | Indentification strip | Polyester film, self-adhesive | white | 100 | 21100-569 |

SPQ (standard pack quantity): Part number includes 1 piece, but delivery is exclusively made in standard pack quantity: Please order at least 10 pieces PCB handles or a multiple

### Note

- Can be used with PCB retainer B1, B2, see page 7.104

**For further information www.schroff.biz/oneclick**
oneClick search code = Part no.

## PCB handle B2

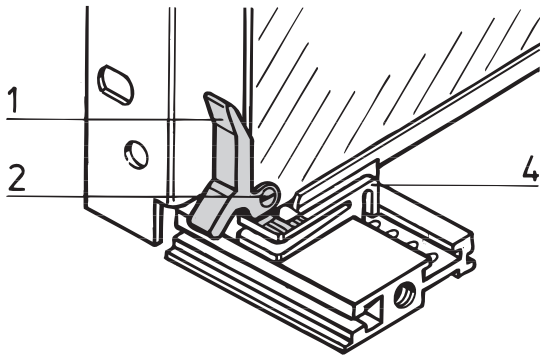


BZA46427

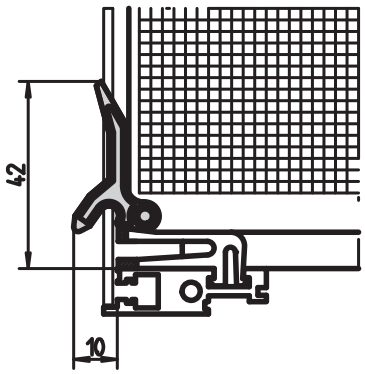


BZB42726

- For bolting to PCBs (1.6 mm); can only be used on bottom horizontal rail
- Extraction function only
- Can be labelled

### Order Information

| Item | Description | Material | Colour | Qty/PU | Part no. |
|---|---|---|---|---|---|
| 1 | PCB handle | PBT, UL 94 V-0 | red | 1 piece (SPQ 10) | 60817-055 |
| 2 | Slotted cheesehead screw, M2.5 × 6 | St, nickel-plated | – | 100 | 21100-146 |

SPQ (standard pack quantity): Part number includes 1 piece, but delivery is exclusively made in standard pack quantity: Please order at least 10 pieces printed circuit board handles or a multiple

### Note

- Can be used with PCB retainer B1, B2, see page 7.104

**For further information www.schroff.biz/oneclick**
oneClick search code = Part no.

# PCB accessories

## PCB retainer B1, B2

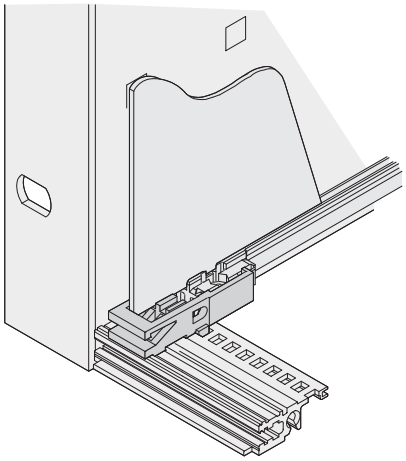

06109050

- For fixing PCB
- Can also be used without PCB handle
- Application on top and bottom horizontal rail
- Suitable for PCB handles B1 and B2

### Order Information

| Description | Material | Colour | Qty/PU | Part no. |
|---|---|---|---|---|
| PCB retainer B1, B2 | PPO, UL 94 V-0 | red | 10 | 24560-381 |

### Note

- Groove width 2 mm

## PCB handle, snap-on

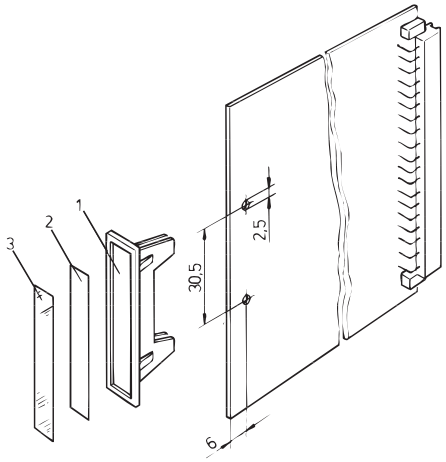


A3261

- For board thickness 1.6 mm

### Order Information

| Item | Description | Material | Colour | Qty | Part no. |
|---|---|---|---|---|---|
| 1 | PCB handle, can be locked | PPE, UL 94 V-1 | grey | 1 piece (SPQ 10) | 60800-039 |
| 1 | PCB handle, can be locked | PPE, UL 94 V-1 | red | 1 piece (SPQ 10) | 60800-045 |
| **Transparent strips** Item 3, 50 × 5 × 0.3 mm, PU 100 pieces | | | | | 69000-007 |

SPQ (standard pack quantity): Part number includes 1 piece, but delivery is exclusively made in standard pack quantity: Please order at least 10 pieces PCB handles or a multiple

## PCB handle, can be bolted/riveted

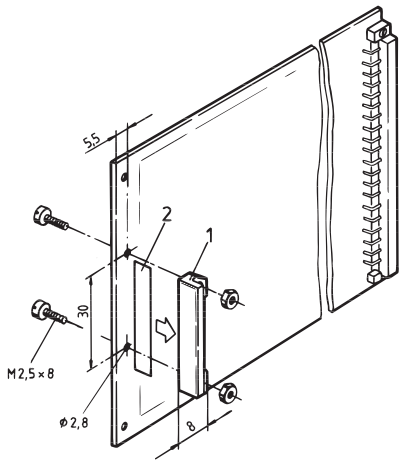


A4-1302

- For board thickness 1.6 mm

### Order Information

| Item | Description | Material | Colour | Qty | Part no. |
|---|---|---|---|---|---|
| 1 | PCB handle, can be bolted/riveted | PC | yellow | 1 piece (SPQ 10) | 60817-050 |
| 2 | PCB handle, can be bolted/riveted | PC | red | 1 piece (SPQ 10) | 60817-051 |
| 1 | PCB handle, can be bolted/riveted | PC | green | 1 piece (SPQ 10) | 60817-052 |
| **Identification strip** Item 2, carton, white, 37.5 × 7 × 0.15 mm, 1 sheet = 105 pieces | | | | | 69000-969 |
| **Pozidrive panhead screw** M2.5 × 8, St, nickel-plated, PU 100 pieces | | | | | 21101-069 |
| **Hexagonal nut** A 2.5, nickel-plated, PU 100 pieces | | | | | 21100-144 |
| **Tubular rivet, form B (roundhead)** B 2.5 x 0.25 x 5, St/brass, raw, DIN 7340, PU 100 pieces | | | | | 21100-459 |

SPQ (standard pack quantity): Part number includes 1 piece, but delivery is exclusively made in standard pack quantity: Please order at least 10 pieces PCB handles or a multiple

# PCB accessories

## PCB pocket

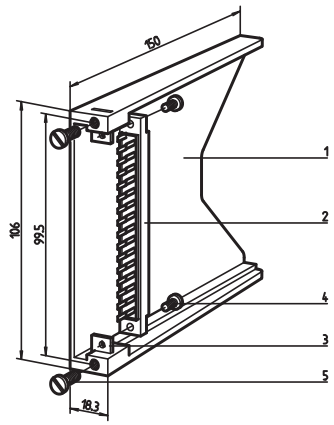


LKA42605

Retention bracket (DIN 41612)

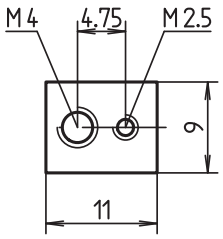


LKA42606

- Accepts PCBs in euroboard format, 100 × 160 mm
- For female connectors to EN 60603 (DIN 41612)

### Delivery comprises (kit)

| Item | Qty | Description |
|---|---|---|
| 1 | 1 | PCB pocket, PBT (P), grey, UL 94 V-0 |
| 3 | 2 | Retention bracket, St, 2 mm, nickel-plated |
| 4 | 2 | Cheesehead screw M2.5 × 6, St, nickel-plated |
| 5 | 2 | Cheesehead screw M4 × 12, St, nickel-plated |

### Order Information

| Item | Description | Material | Colour | Qty/PU | Part no. |
|---|---|---|---|---|---|
| 1 | PCB pocket | PBT (P) | grey | 1 | 20800-032 |

### Note

- Connector (item 2) see page 11.2

**For further information www.schroff.biz/oneclick**
oneClick search code = Part no.

## PCB strengthening (9 U)

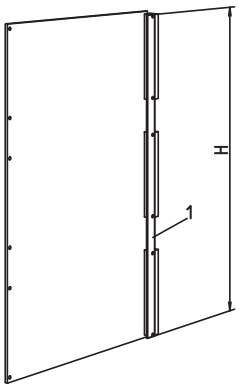


LKA42609

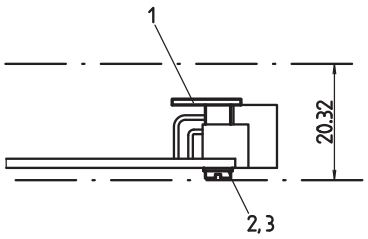


LKA42593

- Protects large PCBs from bending
- Creates an additional crossbar (corresponding to IEEE recommendations, P 896, Nubus, Multibus® II etc.) that links all connectors mecanically
- Fixing points match connectors to EN 60603 (DIN 41612), types B, R, C and D

### Delivery comprises (kit)

| Item | Qty | Description |
|---|---|---|
| 1 | 1 | PCB strengthening, Al extrusion, anodised, cut edges plain; separator, stainless steel, riveted on |
| 2 | 6 | Cheesehead screw M 2.5 × 12, St, nickel-plated |
| 3 | 6 | Washer 2.6, St, nickel-plated |

### Order Information

| Description | Height H mm | Part no. |
|---|---|---|
| For 9 U PCBs | 361.6 | 20809-441 |

## PCB covers

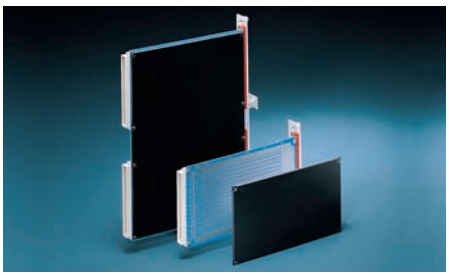

11092008

- Covers to protect solder side of board, see page 7.62

**For further information www.schroff.biz/oneclick**
oneClick search code = Part no.

Individual components

## PCB support for static trapeziform handle

### Fixing parts for extractor handles in key form 2

**Drill hole dimensions on PCB**

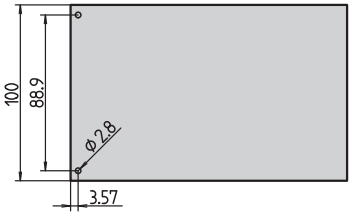


**3 HE**

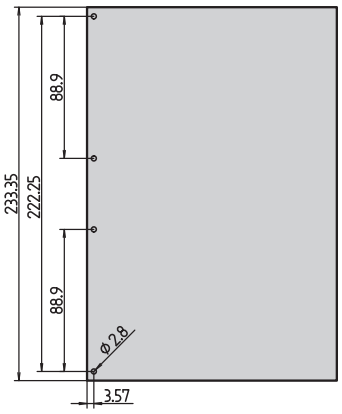


**6 HE**

bga43076 bga43077

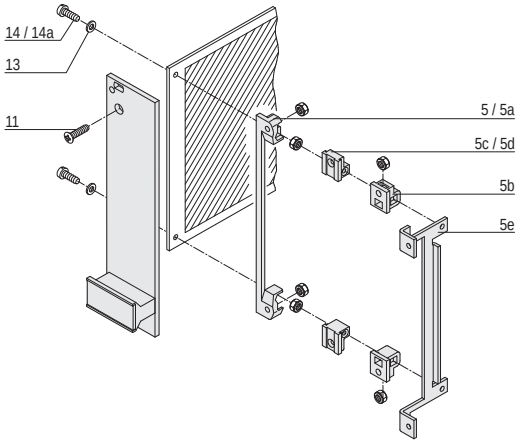


bza46430

| Fixing parts | Item | | Required quantity 3 U | Required quantity 6 U | Qty/PU | Part no. |
|---|---|---|---|---|---|---|
| PCB bracket<br>4 clearance holes for front panel/PCB fixing,<br>4 recesses for hexagon nuts;<br>PBT, UL 94 V-0, red | 5 | 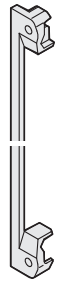 | 1 | 2 | 1 piece (SPQ 10)[1)] | 60807-011 |
| PCB bracket<br>4 threads M2.5 for front panel/PCB fixing,<br>PBT, UL 94 V-0, grey, 1 piece | 5a | AZA45177 | 1 | 2 | 1 piece (SPQ 10)[1)] | 60807-211 |
| PCB bracket<br>Clearance hole for front panel fixing, with recess for hexagon nut, drill hole for self-tapping screw for PCB fixing, PBT, UL 94 V-0, grey, 1 piece | 5b |  AZA45177 | 2 | 4 | 1 piece (SPQ 10)[1)] | 60807-183 |
| PCB bracket<br>2 threads M2.5 for front panel/PCB fixing, die-cast zinc, 1 piece | 5c |  06707050 | 2 | 4 | 1 piece (SPQ 10)[1)] | 60807-181 |
| PCB bracket<br>Thread M2.5 for front panel fixing, clearance hole for PCB fixing, die-cast zinc, 1 piece | 5d |  06707050 | 2 | 4 | 1 piece (SPQ 10)[1)] | 60807-203 |
| PCB bracket<br>4 threads M2.5 for fixing front panel/PCB for recessed PCB mounting (20 mm), mounting depth 192.24 mm, St, zinc-plated; not for europacPRO, multipacPRO, ratiopacPRO, propacPRO or compacPRO, 1 piece | 5e | 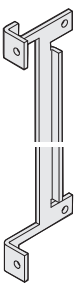 AZA46586 | 1 | 2 | 1 piece (SPQ 10)[1)] | 30808-871 |

1) SPQ (standard pack quantity): Part number includes 1 piece, but delivery is exclusively made in standard pack quantity (SPQ); please order at least the SPQ quantity or a multiple



Part number in bold face type: ready for despatch within 2 working days
Part number in normal type: ready for despatch within 10 working days

## Assembly parts

- Quick-release fasteners
- Sleeves
- Screws
- Cage nuts
- Tools

## Quick-release fasteners

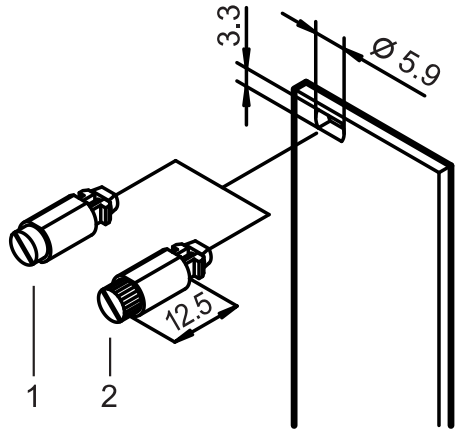


06702062

- Vibration and shock proof
- 1/4 rotary lock with defined stop
- Detection of fastening position through slot position

### Delivery comprises

| Qty | Description |
|---|---|
| 1 | Locking pin, St, locking, Zn die-cast |
| 1 | Press-in sleeve, POM |

### Order Information

| Item | Description | Qty/PU | Part no. |
|---|---|---|---|
| 1 | With slotted head, grey | 100 | 21101-847 |
| 1 | With slotted head, black | 100 | 21101-848 |
| 2 | With knurled and slotted head, grey | 100 | 21101-849 |
| 2 | With knurled and slotted head, black | 100 | 21101-850 |

### Note

Quick-release fasteners: mounting without threaded insert

## Sleeves

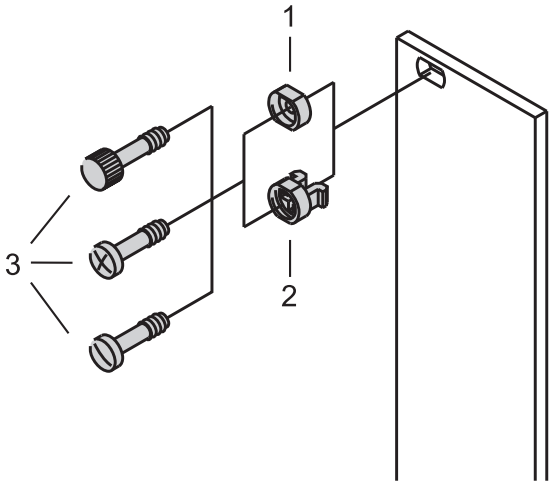


06702061

### Order Information

| Item | Description | Application | Qty/PU pieces | Part no. |
|---|---|---|---|---|
| 2 | Plastic sleeve, PA, grey | for unshielded front panels | 100 | 21100-464 |
| 2 | Plastic sleeve, PA, black | for unshielded front panels | 100 | 21100-591 |
| 1 | Metal sleeve, brass, nickel-plated | for shielded front panels | 10 | 21100-659 |
| 1 | Metal sleeve, brass, nickel-plated | for shielded front panels | 100 | 21100-660 |
| 1 | Metal sleeve, brass, black | for shielded front panels | 10 | 21100-885 |
| 1 | Metal sleeves, stainless steel | for shielded front panels | 10 | 21100-661 |
| 1 | Metal sleeves, stainless steel | for shielded front panels | 100 | 21100-662 |
| **Accessories** | | | | |
| **Pozidrive/slotted collar screw** M2.5 × 11, St, nickel-plated, PU 100 pieces | | | | 21100-748 |
| **Pozidrive/slotted collar screw** M2.5 x 12.3, St, nickel-plated, PU 100 pieces | | | | 21101-101 |

### Note

- Metal sleeves must be pressed-in into front panels
- Sleeve does not fit 2 HP wide front panels

# Assembly parts

## Collar screws

| | Description | Material | Dimension | Qty/PU | Part no. |
|---|---|---|---|---|---|
| 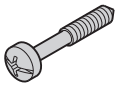 AZA46586 | Pozidrive/slotted collar screw | St, nickel-plated | M2.5 x 11 | 100 | 21100-748 |
| | | St, zinc-plated, black | M2.5 x 11 | 100 | 21100-749 |
| | | Stainless steel, with slot | M2.5 x 11 | 100 | 21101-323 |
| | | St, nickel-plated | M2.5 x 12.3 | 100 | 21101-101 |
| | | St, zinc-plated, black | M2.5 x 12.3 | 100 | 21101-102 |
| | | Stainless steel | M2.5 x 12.3 | 100 | 21101-906 |
| 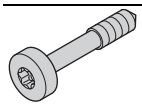 AZA45941 | Torx collar screw | St, nickel-plated | M2.5 x 12.3 | 100 | 21101-782 |
| | | St, zinc-plated, black | M2.5 x 12.3 | 100 | 21101-783 |
| 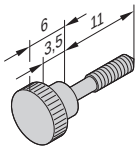  06709050 | Collar screw with knurled head | Brass, nickel-plated | M2.5 x 11 | 50 | 21100-268 |
| 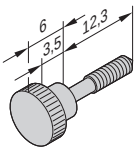  06709051 | | Brass, nickel-plated | M2.5 x 12.3 | 100 | 21101-749 |
| 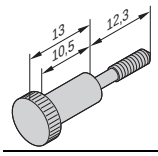  06709052 | | Brass, nickel-plated | M2.5 x 12.3 | 100 | 21101-909 |
| 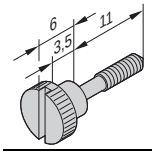  06709053 | Slotted collar screw with knurled head | Brass, nickel-plated | M2.5 x 11 | 100 | 21101-106 |



Part number in bold face type: ready for despatch within 2 working days
Part number in normal type: ready for despatch within 10 working days

# Assembly parts

## Countersunk screws

| | Description | Material | Dimension | Qty/PU | Part no. |
|---|---|---|---|---|---|
|  aza45182 | Pozidrive countersunk screw | St, nickel-plated | M2.5 x 6 | 100 | 21100-515 |
| | | St, nickel-plated | M2.5 x 12 | 100 | 21100-507 |
|  AZA46585 | Torx countersunk screw | St, zinc-plated | M4 x 5 | 100 | 24560-139 |
| | | St, zinc-plated | M4 x 14 | 100 | 24560-145 |
| 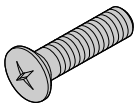 06702056 | Raised Pozidrive countersunk screw | St, nickel-plated | M2.5 x 8 | 100 | 21100-429 |
| | | St, nickel-plated | M2.5 x 10 | 100 | 21100-500 |
| | | St, zinc-plated, black | M2.5 x 10 | 100 | 21100-649 |
| | | St, nickel-plated | M3 x 8 | 100 | 21100-542 |
| | | St, zinc-plated, black | M3 x 8 | 100 | 21100-648 |
| 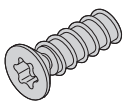 06707057 | Torx countersunk screw, self-tapping | St, zinc-plated | 2.5 x 7.7 | 100 | 24560-158 |

## Screws for plug-in units

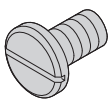
06706053

### Order Information

| Description | Qty/PU | Part no. |
|---|---|---|
| Slotted flathead screw, 6-32 UNC x 6 | 100 | 21100-712 |

## Panhead screws

| | Description | Material | Dimension | Qty/PU | Part no. |
|---|---|---|---|---|---|
| 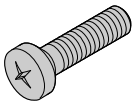 06702057 | Pozidrive panhead screw | St, nickel-plated | M2.5 x 5 | 100 | 21101-314 |
| | | St, nickel-plated | M2.5 x 6 | 100 | 21101-219 |
| | | St, nickel-plated | M2.5 x 8 | 100 | 21101-069 |
| | | St, nickel-plated | M2.5 x 10 | 100 | 21101-220 |
| | | St, nickel-plated | M2.5 x 12 | 100 | 21101-221 |
| | | St, nickel-plated | M2.5 x 16 | 100 | 21101-222 |
| | | St, zinc-plated | M5 x 12 | 100 | 21100-788 |
| 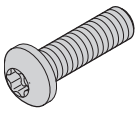 AZA45940 | Torx panhead screw | St, zinc-plated | M2.5 x 6 | 100 | 24560-159 |
| | | St, nickel-plated | M2.5 x 7 | 100 | 24560-147 |
| | | St, nickel-plated | M2.5 x 10 | 100 | 24560-148 |
| | | St, nickel-plated | M2.5 x 12 | 100 | 24560-161 |
| | | St, nickel-plated | M2.5 x 14 | 100 | 24560-162 |
| | | St, zinc-plated | M4 x 6 | 100 | 24560-135 |
| | | St, zinc-plated | M4 x 6 | 100 | 24560-151 |
| | | St, zinc-plated | M4 x 10 | 100 | 24560-155 |
| | | St, zinc-plated | M4 x 14 | 100 | 24560-130 |
| 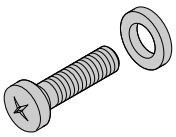 06702051 | Screw + securing washer (PA) | St, nickel-plated | M2.5 x 12 | 100 | 21100-777 |
| 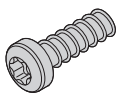 06707058 | Torx panhead screw, self-tapping | St, zinc-plated, black | 2.5 x 7.3 | 100 | 24560-157 |
| | | St, zinc-plated | 2.5 x 9.3 | 100 | 24560-141 |



Part number in bold face type: ready for despatch within 2 working days
Part number in normal type: ready for despatch within 10 working days

# Assembly parts

## Grub screws

| | Description | Material | Dimension | Qty/PU | Part no. |
|---|---|---|---|---|---|
| 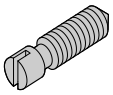 06702053 | Grub screw | Stainless steel | M2.5 x 9 | 100 | 21101-359 |
| | | St, nickel-plated | M2.5 x 8 | 100 | 21100-276 |
| | | St, zinc-plated | M3.0 x 8 | 100 | 21100-646 |

## Washers

| | Description | Material | Dimension | Qty/PU | Part no. |
|---|---|---|---|---|---|
|  AZA45178 | Washer | Plastic, PA | 2.7 x 5 x 1 | 100 | 21101-121 |
| | | Plastic, PA | 2.8 x 6,3 x 2 | 100 | 21101-964 |
| | | St, nickel-plated | A2.7 DIN 125 | 100 | 21100-721 |
|  AZA45180 | Shakeproof washer | St, nickel-plated | A 2.6 | 100 | 21100-142 |

## Nuts

| | Description | Material | Dimension | Qty/PU | Part no. |
|---|---|---|---|---|---|
|  AZA43239 | Hexagon nut | St, nickel-plated | M2.5 | 100 | 21100-144 |
|  06707050 | Square nut | St, nickel-plated | M2.5 | 100 | 21100-359 |
|  AZA45921 | Square nut | St, zinc-plated | M4 | 100 | 24560-140 |

## Tubular rivet

| | Description | Material | Dimension | Qty/PU | Part no. |
|---|---|---|---|---|---|
| 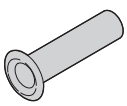 06706050 | Tubular rivet, form B (roundhead) | St/brass, raw | B 2.5 x 0.25 x 5 | 100 | 21100-459 |

## Assembly tools

### Order Information

| | Description | Application | Dimension | Qty/PU | Part no. |
|---|---|---|---|---|---|
| 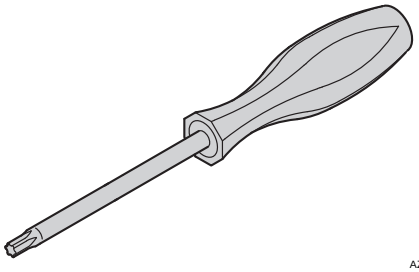 AZA45925 | Torx screwdriver | For M2.5 screw | T8 | 1 | 64560-026 |
| | | For M4 screw | T20 | 1 | 64560-027 |
| 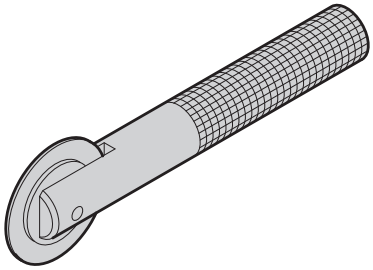 aza45938 | Assembly tool | Exclusively to fix stainless steel EMC gaskets in horizontal rails | – | 1 | 24560-271 |
| 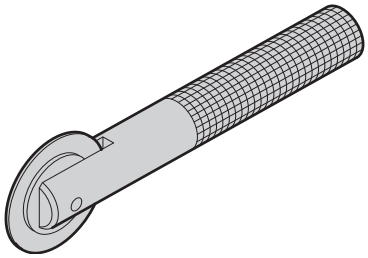 aza45937 | Assembly tool | To fix stainless steel EMC gaskets on front panels with lateral slot | – | 1 | 24560-270 |

**Note**

- Assembly tool to insert keying/coding pegs in guide rails is available on request

## Measuring tape



32506001

- Measuring tape with cm, U-, HP-division (length 2 m)
- Plastic housing, metal measuring tape with automatic collection

### Order Information

| Description | Qty/PU | Part no. |
|---|---|---|
| Measuring tape | 1 | 89009-001 |

**For further information www.schroff.biz/oneclick**
oneClick search code = Part no.



SCHROFF GMBH, LANGENALBER STRASSE 96–100, D-75334 STRAUBENHARDT WWW.PENTAIREQUIPMENTPROTECTION.COM

39601-641 © 2012 Pentair Equipment Protection