Fuse Clips for Printed Circuit Boards
For ATC, 5mm, ¼″ & 13⁄32″ Diameter Fuses

1AXXXX Series

1A4534 Series
For ¼″ Diameter Fuses
With End Stops & Angled Out Leads

Dimensional Data

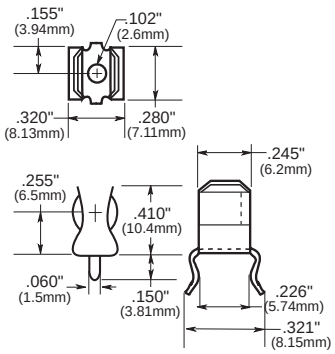

Catalog Number	Clip Mat.*	Finish
1A4534-01	BeCu**	Bright Tin
1A4534-06	Cart. Brass	Bright Tin
1A4534-07	Spg. Br.	Bright Tin

1A4533 Series
For ¼″ Diameter Fuses
Without End Stops & Angled Out Leads

Dimensional Data

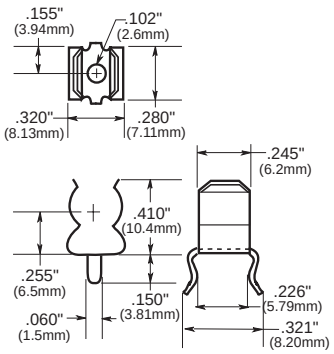

Catalog Number	Clip Mat.*	Finish
1A4533-01	BeCu**	Bright Tin
1A4533-06	Cart. Brass	Bright Tin
1A4533-07	Spg. Br.	Bright Tin

1A1907 Series
For ¼″ Diameter Fuses
With End Stops & Straight Leads

Dimensional Data

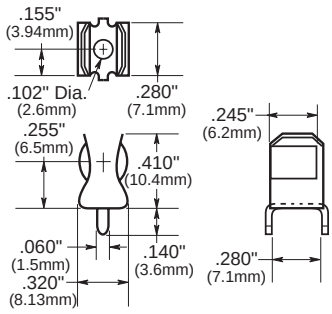

Catalog Number	Clip Mat.*	Finish
1A1907-02	Cart. Brass	None Bright Dipped
1A1907-03	BeCu**	Bright Tin
1A1907-05	BeCu**	Silver
1A1907-06	Cart. Brass	Bright Tin
1A1907-07	Spg. Br.	Bright Tin

1A3398 Series
For ¼″ Diameter Fuses
Without End Stops & Straight Leads

Dimensional Data

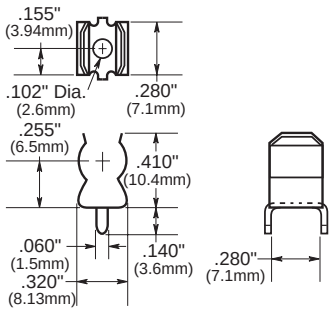

Catalog Number	Clip Mat.*	Finish
1A3398-07	Cart. Brass	Bright Tin
1A3398-08	Spg. Br.	Bright Tin

*Spg. Br. - Spring Bronze; BeCu - Beryllium Copper; Cart. Brass - Cartridge Brass
**Beryllium copper recommended for currents higher than 15 amps (¼″ clips).

Fuse Clips for Printed Circuit Boards
For ATC, 5mm, ¼″ & 13/32″ Diameter Fuses

1AXXXX Series

1A3399 and 1A5018 Series
For 5mm Diameter Fuses
With Straight Leads

Dimensional Data

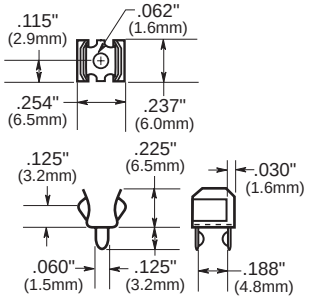

Catalog Number	Clip Mat.*	Finish
1A3399-10	Spg. Br.	Bright Tin
1A3399-01	BeCu**	Silver
1A3399-04	BeCu**	Bright Tin

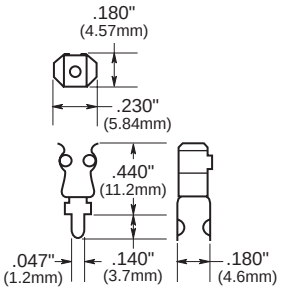

High Profile

Catalog Number	Clip Mat.*	Finish
1A5018-10	Spg. Br.	Bright Tin
1A5018-7	Spg. Br.	Silver

1A5601 Series
For 5mm Diameter Fuses (0 to 7 amps)

Dimensional Data

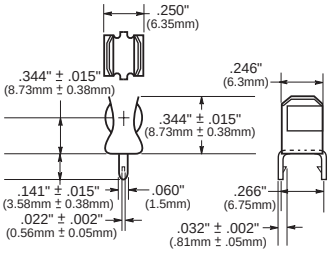

Catalog Number	Clip Mat.*	Finish
1A5601	Cart. Brass	Bright Tin

1A5602 Series
For 5mm Diameter Fuses (0 to 7 Amps)

Dimensional Data

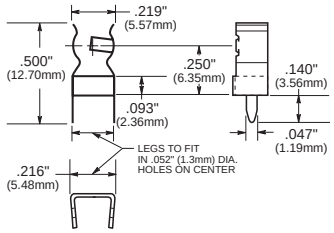

Catalog Number	Clip Mat.	Finish
1A5602	Cart. Brass	Bright Tin

1A1119 Series
For ¼″ Diameter Fuses
With End Stops and Angled In leads

Dimensional Data

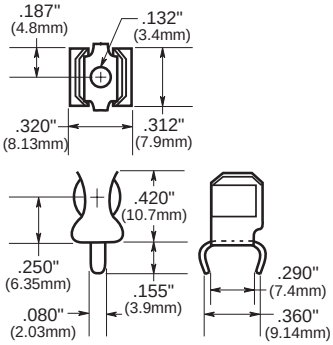

Catalog Number	Clip Mat.*	Finish
1A1119-04	BeCu**	Bright Tin
1A1119-05	BeCu**	Silver
1A1119-10	Cart. Brass	Bright Tin
1A1119-13	Spg. Br.	Bright Tin

1A1120 Series
For ¼″ Diameter Fuses
Without End Stops and Angled In Leads

Dimensional Data

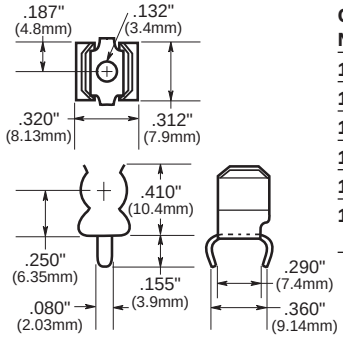

Catalog Number	Clip Mat.*	Finish
1A1120-02	Cart. Brass	Bright Dip
1A1120-05	BeCu**	Silver
1A1120-06	BeCu**	Bright Tin
1A1120-09	Cart. Brass	Bright Tin
1A1120-12	Spg. Br.	Bright Tin
1A1120-11	Spg. Br.	None Bright Dipped

*Spg. Br. - Spring Bronze; BeCu - Beryllium Copper; Cart. Brass - Cartridge Brass
**Beryllium copper recommended for currents higher than 15 amps (¼″ clips).

Fuse Clips for Printed Circuit Boards
For ATC, 5mm, ¼″ & 13/32″ Diameter Fuses

1AXXXX Series

1A5778 Series

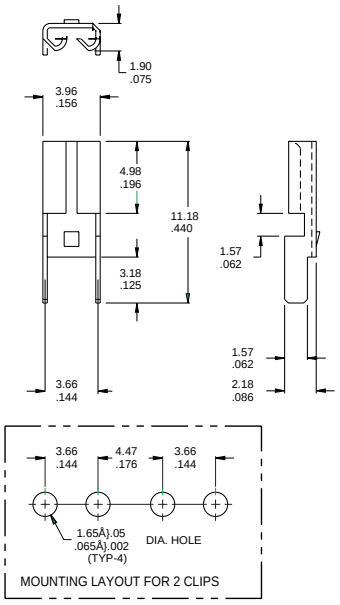

MATERIAL: BRASS, NICKEL PLATED, .030 .012 THICK

1A5779 Series

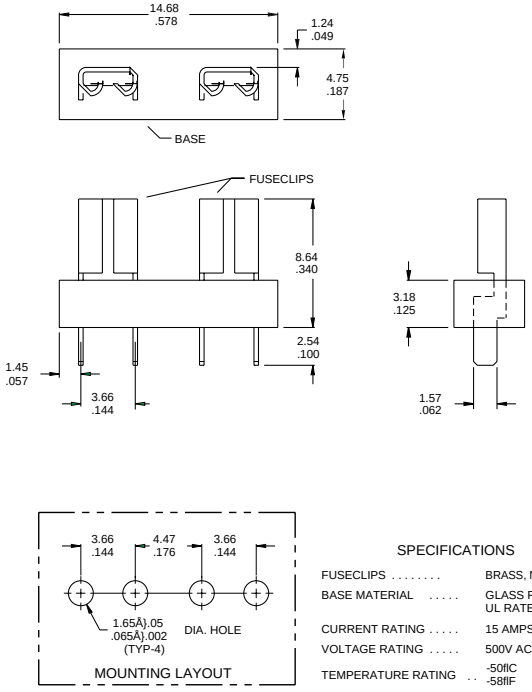

SPECIFICATIONS

FUSECLIPS	BRASS, NICKEL PLATED
BASE MATERIAL	GLASS FILLED NYLON, UL RATED 94V-0
CURRENT RATING	15 AMPS
VOLTAGE RATING	500V AC
TEMPERATURE RATING	-50ºC TO 145ºC / -58ºF TO 292ºF

1A5780 Series

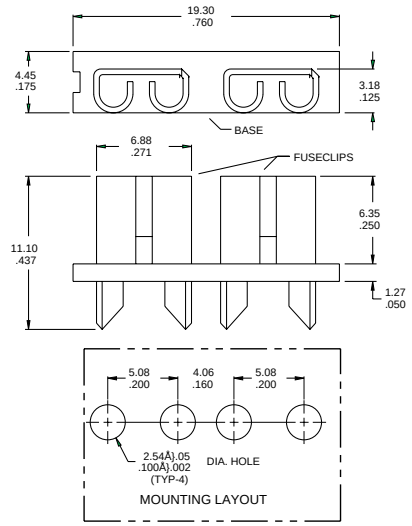

SPECIFICATIONS

FUSECLIPS	BRASS, NICKEL PLATED
BASE MATERIAL	GLASS FILLED NYLON, UL RATED 94V-0
CURRENT RATING	15 AMPS
VOLTAGE RATING	500V AC
TEMPERATURE RATING	-50ºC TO 145ºC-58ºF 292ºF

1A3400 Series
For 13/32″ Diameter Fuses (20 Amps Maximum)
With End Stops & Straight Leads

Dimensional Data

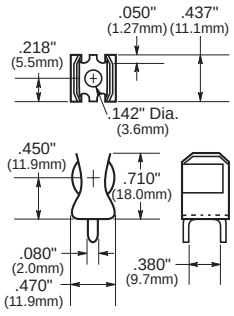

Catalog Number	Clip Mat.*	Finish
1A3400-09	Spg. Br.	Bright Tin

1A5600 Series
For ATC® Fuses (0 to 20 Amps)

Dimensional Data

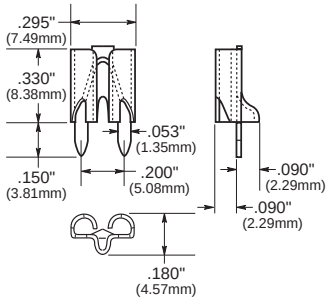

Catalog Number	Clip Mat.*	Finish
1A5600	Cart. Brass	Satin Finish Tin

*Spg. Br. - Spring Bronze; BeCu - Beryllium Copper; Cart. Brass - Cartridge Brass
**Beryllium copper recommended for currents higher than 15 amps (¼″ clips).

Fuse Clips for Printed Circuit Boards
For ATC, 5mm, ¼″ & 13⁄32″ Diameter Fuses

1AXXXX Series

Footprint
Dimensional Data

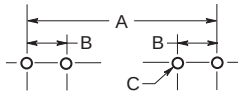

	Dimensions										
	A						ATC	ATM			
Catalog Number	7⁄8″ (22.2mm)	1″ (25.4mm)	1¼″ (31.8mm)	1⅜″ (34.93mm)	1½″ (38.10mm	20mm	—	—	B Tabs	C (4 holes)	Board Thickness
1A5778-	—	—	—	—	—	—	—	.464" (11.79)	.144" (3.66)	.065″ ± .002″ (1.65 ± .05)	.062″ (1.57)
1A5779-	—	—	—	—	—	—	—	.464" (11.79)	.144" (3.66)	.065″ ± .002″ (1.65 ± .05)	.062″ (1.57)
1A5780-	—	—	—	—	—	—	.560 (14.22)	—	.200" (5.08)	.100″ ± .002″ (2.54 ± .05)	.062″ (1.57)
1A3398- **1A1907-**	1.00″ (25.40)	1.125″ (28.58)	1.375″ (34.920)	—	—	—	—	—	295″- .305″ (7.49 - 7.75)	.067″ - .070″ (1.70 - 1.78)	.093″ (2.36)
1A1119-	1.00″ (25.40)	1.125″ (28.58)	1.375″ (34.92)	—	—	—	—	—	.295″- .305″ (7.49 - 7.75)	.093″ ± .002″ (2.36 ± .05)	.062″ to .125″ (1.57 to 3.18)
1A1120-	1.00″ (25.40)	1.125″ (28.58)	1.375″ (34.920)	—	—	—	—	—	.295″- .305″ (7.49 - 7.75)	.093″ ± .002″ (2.36 ± .05)	.062″ to .125″ (1.57 to 3.18)
1A3399-	—	—	—	—	—	.875″ (22.23)	—	—	.200″ (5.08)	.067″ - .070″ (1.70 - 1.78)	093" (2.36)
1A3400-	—	—	—	1.50″ (38.10)	1.625″ (41.28)	—	—	—	.405″ (10.29)	.091″ - .095″ (2.31 - 2.41)	.125″ (3.18)
1A4533-	1.00″ (25.40)	1.125″ (28.58)	1.375″ (34.920)	—	—	—	—	—	.300″ (7.62)	.067″ - .070″ (1.70 - 1.78)	.062″ (1.57)
1A4534-	1.00″ (25.40)	1.125″ (28.58)	1.375″ (34.920)	—	—	—	—	—	.300″ (7.62)	.067″ - .070″ (1.70 - 1.78)	.062″ (1.57)
1A5018-	—	—	—	—	—	.820″ ± .015″ (20.80 ± .38)	—	—	.180″ (4.6)	.053″ - .002″ (1.35 - 0.05)	.093″ (2.36)
1A5600-	—	—	—	—	—	—	—	—	.200″ (5.08)	.052″ ± .003″ (1.32 ± .077)	.125″ max. (3.18)
1A5601-	—	—	—	—	—	.820″ ± .015″ (20.80 ± .38)	—	—	266″ (6.76)	.067″ ± .003″ (1.70 ± .074)	.062″ (1.57)
1A5602-	—	—	—	—	—	—	—	—	.220″ (5.588)		.125″ max. (3.175)

*Spg. Br. - Spring Bronze; BeCu - Beryllium Copper; Cart. Brass - Cartridge Brass
**Beryllium copper recommended for currents higher than 15 amps (¼″ clips).

The only controlled copy of this BIF document is the electronic read-only version located on the Bussmann Network Drive. All other copies of this document are by definition uncontrolled. This bulletin is intended to clearly present comprehensive product data and provide technical information that will help the end user with design applications. Bussmann reserves the right, without notice, to change design or construction of any products and to discontinue or limit distribution of any products. Bussmann also reserves the right to change or update, without notice, any technical information contained in this bulletin. Once a product has been selected, it should be tested by the user in all possible applications.