Series 19X MAXI® Circuit Breakers

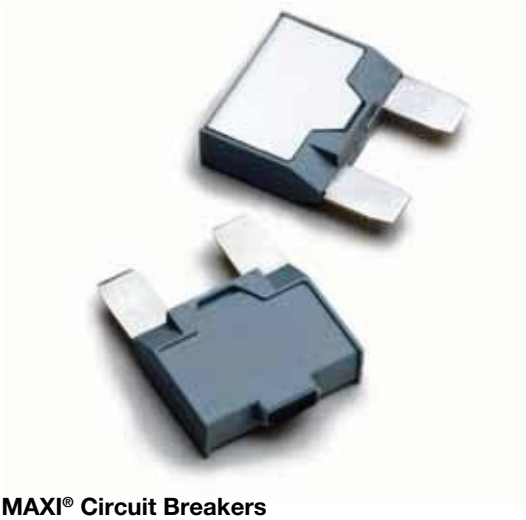

Series 19X MAXI® Circuit Breakers
Auto, Manual & Modified Reset

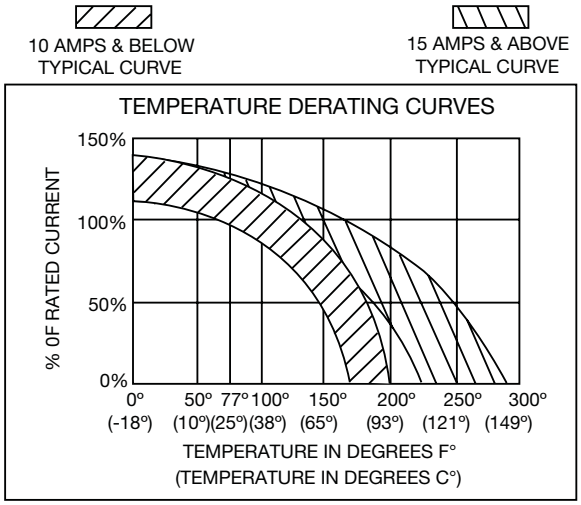

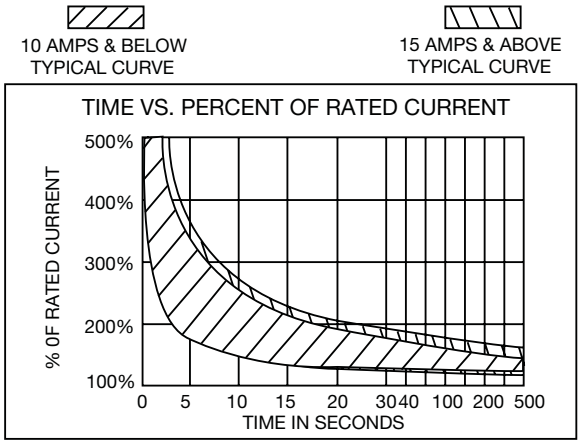

Specifications

Single Pole Thermal Type Breakers
Rating: 8-50A; 14Vdc; 28Vdc (Series 193, 194, & 195)
Interrupt Rating: 150A @ 14Vdc (8-10A versions); 225A@ 14Vdc (15A version); 300A @ 14Vdc (20A version); 450A@ 14Vdc (25-30A versions); 600A @ 4Vdc (35-40A versions); 750A @ 14Vdc (50A version)
Operating Temperature Rating: –40°F (–40°C) to 185°F (85°C)
Storage Temperature Rating: –40°F (–40°C) to 260°F (125°C)
Materials: Grey UL-Rated 94V0 thermoplastic
Termination: Compatible with fuse blocks accepting MAXI® or ATC® blade fuses
Compliances: SAE J553, SAE J1171 (ignition protected)

Dimensions - in(mm)

(Dims. Shown are for reference only. Contact factory for latest prints)

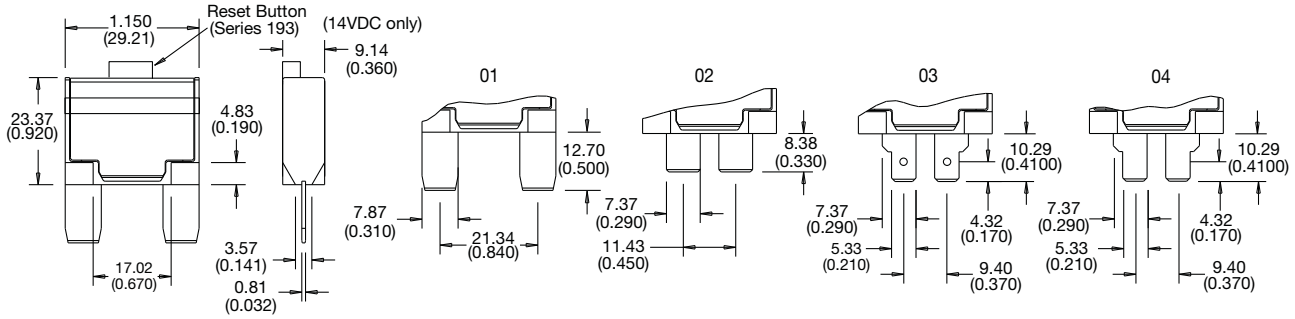

Terminal Options

Part Numbering System

Series	Rating		Terminal	Cover		Marking
1 9 ❑	❑❑	–	❑❑	M	–	❑
191 – Type I, 14 VDC 192 – Type II, 14 VDC 193 – Type III, 12V/24 VDC 194 – Type I, 24 VDC 195 – Type II, 24 VDC	08 – 8 amps 10 – 10 amps 15 – 15 amps 20 – 20 amps 25 – 25 amps 30 – 30 amps 35 – 35 amps 40 – 40 amps 50 – 50 amps (191, 193, 194 only)		01 – MAXI® 02 – Wide ATC® 03 – Long ATC® (w/dimple) 04 – Long ATC® (no dimple)	M – Metal*		(Consult factory for special markings.)